DESIGN REVIEW BOARD
DECEMBER 10, 2021

ALPHARETTA CITY HALL
COUNCIL CHAMBERS
2 PARK PLAZA
8:30 AM

I. MEETING ANNOUNCEMENTS

Today's Design Review Board meeting will commence at 8:30 a.m. and a break is scheduled at 12:00 p.m. The meeting will resume at 12:30 p.m.

II. WORKSHOP

III. CALL TO ORDER

IV. ROLL CALL

V. PLEDGE TO THE FLAG

VI. ITEMS FROM STAFF

VII. ITEMS FROM BOARD MEMBERS

1. **DRB Meeting Minutes of**

VIII. PUBLIC HEARING

1. **DRB210056 Pamelot Farms 54 Roswell St**
   review signage
2. **DRB210043 The Cooler 10800 Davis Dr**
   review exterior and landscape
3. **DRB210059 Village Park Milton Phase II 555 Wills rd**
   review new phase

IX. ADJOURNMENT

Design Review Board Hearing Application And Filing Procedures

UPDATED: September 7, 2021

Department Of Community Development

2 Park Plaza
Alpharetta, GA 30009
www.alpharetta.ga.us

Tel: 678.297.6070
Fax: 678.297.6071

INSTRUCTIONS AND REQUIRED MATERIALS

The City of Alpharetta Design Review Board Hearing Application has been designed to allow you the ease of completing the form electronically and printing the completed form for submittal. Please note, however, that the form cannot be saved so as to include the information that you input.

Required Materials:

In order to allow the Design Review Board to adequately and effectively understand and consider the nature of your request it is required that certain materials be included with your submittal. These required items are described below along with the type(s) of review for which they would be needed. Submittals not including the appropriate materials, as indicated below, will not be accepted for review.

Site Plan Review

- ☐ Legal description of the property
- ☐ Site plan(s) showing locations of all site features, including but not limited to
  - Buildings
  - Roads
  - Parking Areas
  - Specimen trees
  - Detention / retention areas
  - Dumpster / refuse locations (screening and materials)
  - HVAC / electrical equipment locations
- ☐ Site lighting with photometric drawings and compatibility to neighboring buildings and property
- ☐ Retaining wall(s) location and materials

Landscape Review

- ☐ Landscape drawing(s) prepared by landscape architect showing locations of all landscape features, including but not limited to
  - Size and type of all plant material; including ground covers
  - Seasonal beds

Signage Review

- ☐ Overall site plan drawing indicating locations of ground signs and required setbacks
- ☐ Exterior elevations indicating locations of all wall signs
- ☐ Individual color drawings of each sign indicated
  - Dimensions
  - Materials
  - Lighting
  - Construction
  - Colors

Exterior Elevation Review

- ☐ Colored exterior elevations with materials notes of all facades of the building(s)
- ☐ All exterior material and color samples (Shall be brought to the scheduled meeting)
- ☐ Provide site line study from the public right of way showing locations of roof-top equipment
  - Vents
  - Satellite dishes
  - Exhaust pipes
  - Antennas
- ☐ Locations of building lighting
- ☐ Perspective drawings and renderings

Submittal Procedure:

One (1) original plus one (1) copy of a completed Hearing Application and supporting documents are to be filed by the deadline dates reflected on the following page. Completed applications received after the deadline shall be placed on the next available agenda. All renderings attached to the application must be in color.

An electronic set in .PDF format on a flash drive containing the entire applications; including all documents, plans, and drawings; must be included with the application. Each component of your submittal must be saved as a separate file document (for example, all of your individual documents relating to the Exterior Elevation Review (site plan, site line study, and lighting and material cut sheet) should all be saved into one .PDF document.

Any oversized materials may be attached to the original application. All collated sets shall be submitted on paper no greater than 11 inches by 17 inches in size and folded to 8.5 inches x 11 inches. Two (2) sets of all landscape plans shall be submitted full-size.

Drawings submitted must be accurate and labeled.

Technical drawings (i.e. signs, elevations, site plans) must be drawn to scale).

Photos shall be mounted on 8.5 inch by 11 inch paper and labeled.
Presentation materials (including actual materials, sample boards, or mounted drawings) should not be submitted, but brought by the Applicant to the scheduled Design Review Board meeting.

Filing Deadlines And Meeting Schedule

Completed applications are accepted only on, or prior to, the dates indicated as filing deadlines and only between the hours of 8:30 a.m. and 3:30 p.m. Applications will not be accepted on any other dates or times. Incomplete applications will not be accepted. All fees must be paid at the time of application.

The Design Review Board convenes at 8:30 a.m. on the meeting dates indicated, and a break will start at 12:00 p.m. and will last until 12:30 p.m. All meetings are held in Council Chambers at Alpharetta City Hall, which is located at 2 Park Plaza.

Filing Deadlines	Meeting Schedule
January 04, 2021	January 15, 2021
February 01, 2021	February 18, 2021
March 01, 2021	March 19, 2021
April 01, 2021	April 16, 2021
May 3, 2021	May 21, 2021
June 01, 2021	June 18, 2021
July 01, 2021	July 16, 2021
August 02, 2021	August 20, 2021
September 01, 2021	September 17, 2021
October 01, 2021	October 15, 2021
November 01, 2021	November 19, 2021
December 01, 2021	December 10, 2021

CITY OF ALPHARETTA

DESIGN REVIEW BOARD APPLICATION

FOR OFFICE USE ONLY

Case DRB: _____

☐ Fee Paid Initial: _____

For your convenience, this form may be completed electronically and printed upon completion. If you choose to handwrite your responses, please print in a clear, easily legible fashion.

Please complete this form and the submittal package in its entirety. *See Page 2 "Instructions and Required Materials" for details.* Lastly, verify that all information is true and accurate.

Your completed submittal package should be delivered to:

City of Alpharetta
2 Park Plaza
Alpharetta, GA 30009

NOTE: All applicable fees must be included with the application. Please note that a 3% convenience fee will be added to all credit card transactions. Applications will be accepted only on the dates reflected on the page of this form titled "Filing Deadlines and Meeting Schedule" and only between the hours of 8:30 AM and 3:30 PM.

If you have questions regarding this application or the design review process, please contact Bret Schroeder by calling 678-297-6088.

Business Name: Pamelot Farms

Location Address: 54 Roswell St

Mailing Address: _____

City: Alpharetta State: GA Zip Code: 30009 - _____

Contact For All Notifications: Vanessa Jimenez

Contact Telephone: 470 - 440 - 6414 Mobile Telephone: ___ - ___ - ___

Fax: ___ - ___ - ___ Email: signs@alphasign.com

Contact's Relation To Business: Contractor

This Application For (Check all that apply):

- ☐ Addition
- ☐ Modification to Exterior
- ☐ Auxiliary Structure
- ☐ New Construction
- ☐ Color Selection
- ☒ Signage
- ☐ Material Selection

This page will be the first page of your completed submittal packet.

Application Fees:

Any sign or remodel review within the Downtown Overlay	$	175.00
All other reviews	$	300.00
Total Due		_____

CITY OF ALPHARETTA

DESIGN REVIEW BOARD APPLICATION

Property Owner Information:

Property Owner Name: Laura Steh

Physical Address: 2105 Bethany Way Alpharetta Georgia 30004 United States

Mailing Address:

City: Alpharetta State: Ga Zip Code: 30004 -

Owner Telephone: 770 - 846 - 1559 Contact Fax: - -

Property Owner Authorization *(Must be completed if the applicant is not the legal owner of the subject property).*

I, the undersigned, do hereby swear and attest, under penalty of law for false swearing, that I am the legal owner, as shown in the records of Fulton County, Georgia, of the property described herein and that I authorize the person identified herein as "Applicant" to act on my behalf in pursuit of this request.

Owner Name (Printed): Date:

Owner Signature:

Property Information:

Address (If Assigned) : 54 Roswell Street

Tax ID or Map Reference Number: 22 482312690419

Land Lot(s): 1269 District: C-2 Section:

Existing Zoning of Property: Commercial Existing Uses of Property: Commercial

---

This form is to be executed under oath. I, the person identified herein as "Applicant," do solemnly swear and attest, subject to criminal penalties for false swearing, that the information provided in this Design Review Board Application is true and correct and contains no misleading information. I also understand that Design Review Board review and/or approval does not include review or approval for code compliance and that City of Alpharetta site and building plan review staff should be contacted with respect to code compliance issues and permitting procedures.

Applicant Signature: Date:

Print Form

Design Review Board Review Criteria

How will this proposal be visually compatible with the character of the surrounding areas?

In your submittal package, have you included a site line study from the public right of way, which shows the location of rooftop structures? If not, please explain below.

- ☐ Yes
- ☐ No

Design Review Board Review Criteria

Please respond to the following ONLY if your application is within the North Point Overlay.

Explain how your application meets the site design and streetscape standards required for the North Point Overlay. *Site Design and Streetscape standards for the North Point Overlay can be found at this link:* Unified Development Code §2.10.3(B).

Explain how your application meets the fenestration, pedestrian access, building materials, building facade, and building massing standards required for the North Point Overlay.

Building design standards for the North Point Overlay can be found at this link: Unified Development Code §2.10.8.

Describe the type of Civic Spaces and/or Amenity Spaces that your application includes.

Open Space requirements for the North Point Overlay can be found at this link: Unified Development Code §2.10.10.

Please list and describe the EcoDistrict measures that your application includes.

EcoDistrict Measures for the North Point Overlay can be found at this link: Unified Development Code §2.10.11.

Design Review Board Review Criteria

Please respond to the following ONLY if your application is within the Downtown Overlay.

Which of the following architectural design styles does your application include?

- ☐ Georgian
- ☐ Federal / Adam
- ☐ Greek Revival
- ☐ Neoclassical
- ☐ Stick
- ☐ Queen Anne
- ☐ Shingle
- ☐ Folk Victorian
- ☐ Romanesque
- ☐ Italianate
- ☐ Tudor Eclectic
- ☐ Beaux Arts
- ☐ French Colonial
- ☐ French Eclectic
- ☐ French New Traditional

Please review the Downtown Overlay Architectural Style Requirements at this link: Unified Development Code § 2.8.7(D)-(R)

Describe how your application meets one (or more) of the above architectural design styles.

Please review the Alpharetta Downtown Design Guidelines at this link: Alpharetta Downtown Design Guidelines

List how your application aligns with or compliments the Alpharetta Downtown Design Guidelines.

Old Roswell St
Roswell St
Roswell St
Roswell St
Roswell St
The Holbrook
Trinity Life At Home
Sign located here
54 Roswell St,
Alpharetta, GA 30009
Pamelot Farm Tasting Room Location

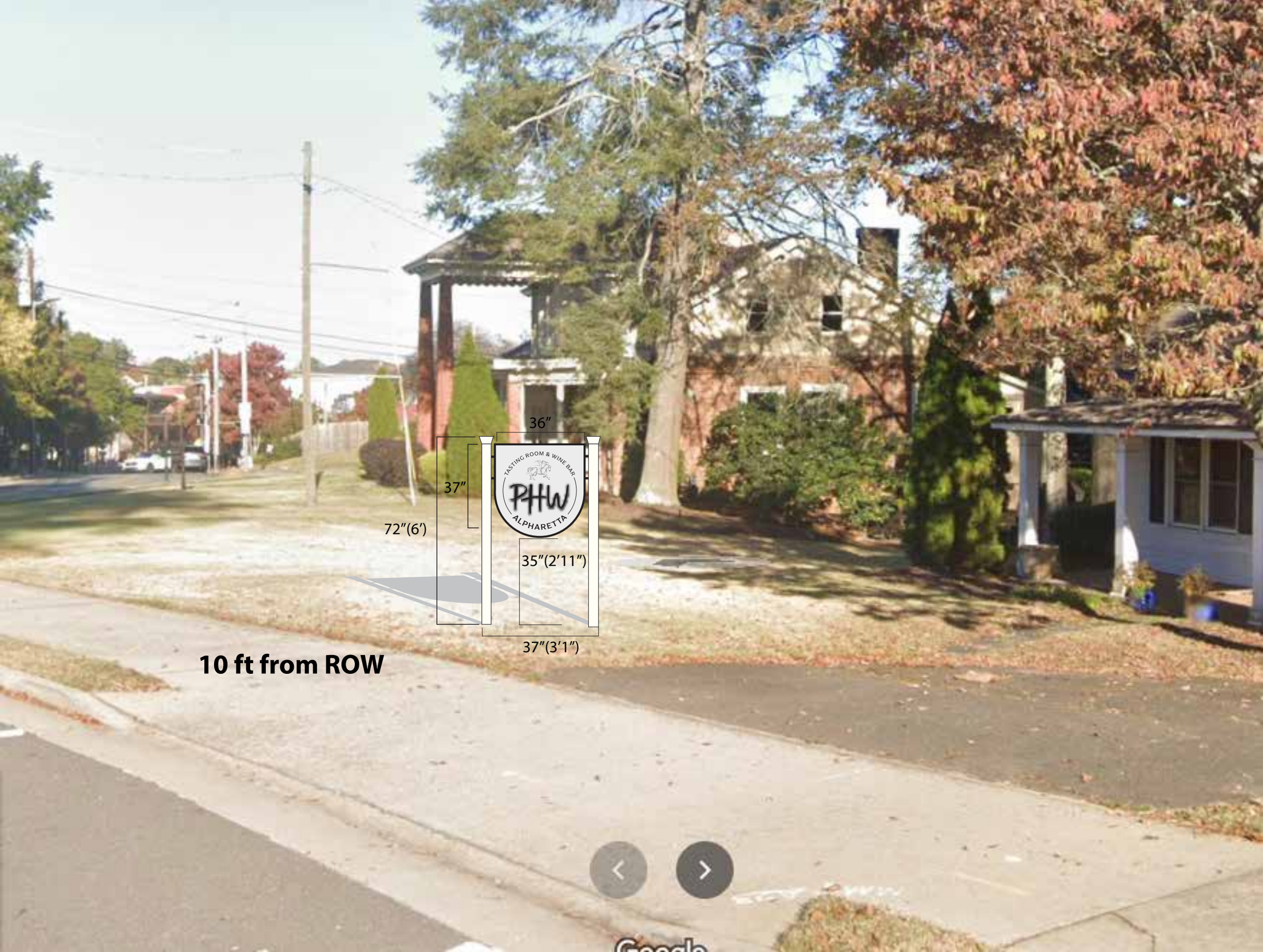
36"
37"
72"(6')
TASTING ROOM & WINE BAR
PHW
ALPHARETTA
35"(2'11")
37"(3'1")
10 ft from ROW

Pamelot Farm Tasting Room Sign

54 Roswell Street, Alpharetta, GA 30004

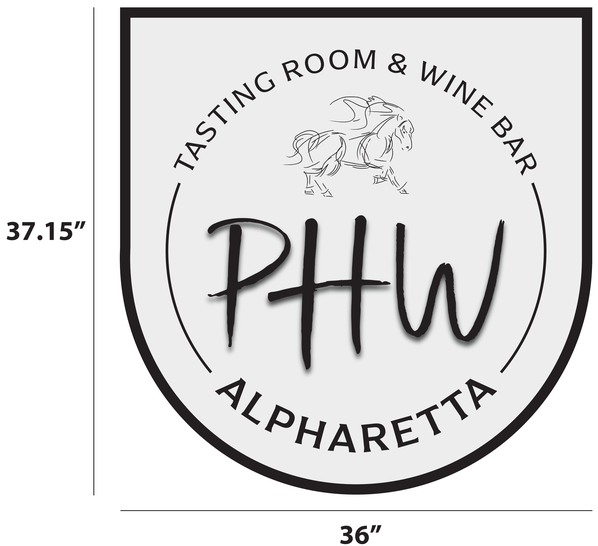

Material: (2) 1" Routed HDU, Double-sided 2.5" overall thickness
Colors: Black and White
Installation: (2) 1" HDU boards laminated with 1/2 MDO in the middle for mounting onto 4x4 Aluminum posts painted white

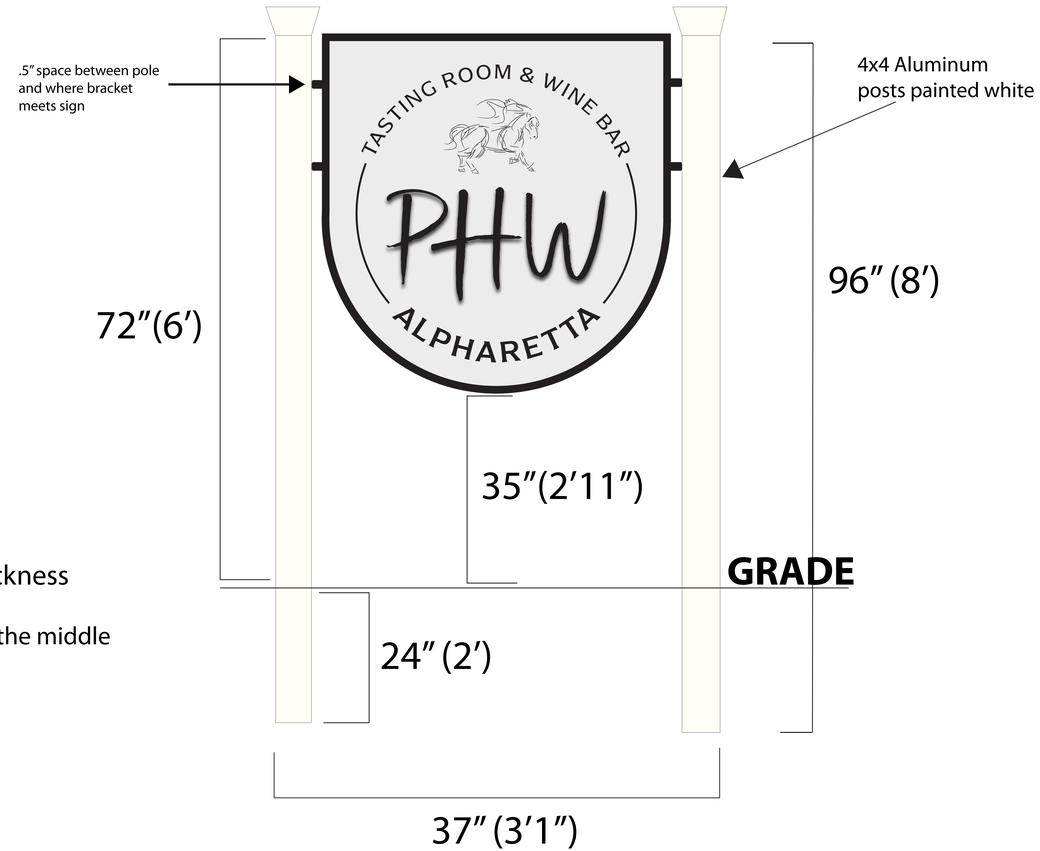

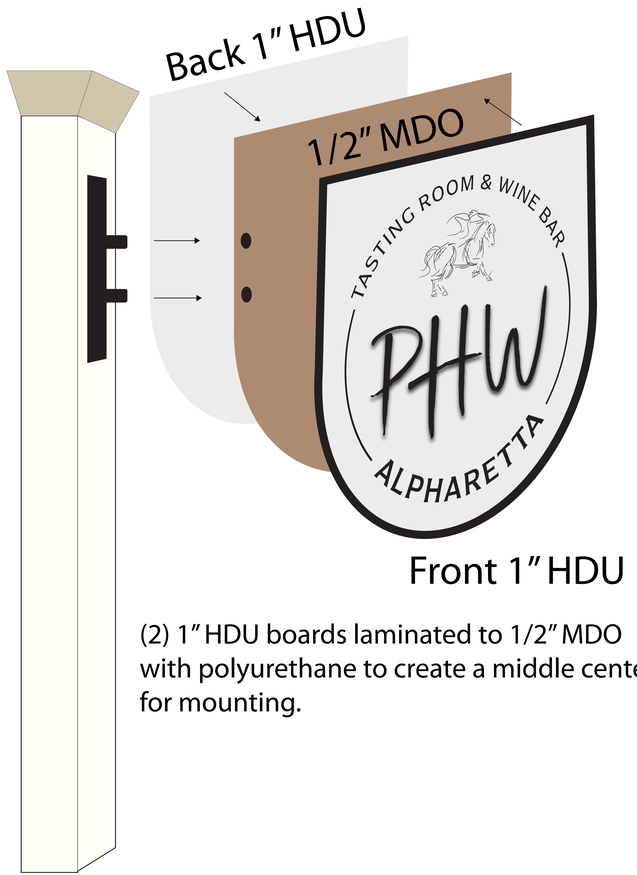

(2) 1" HDU boards laminated to 1/2" MDO with polyurethane to create a middle center piece for mounting.

Copyright © 2021 Alpha Sign Group, All rights reserved.

Cooler Landscape Plan

Backyard Escape Inc.

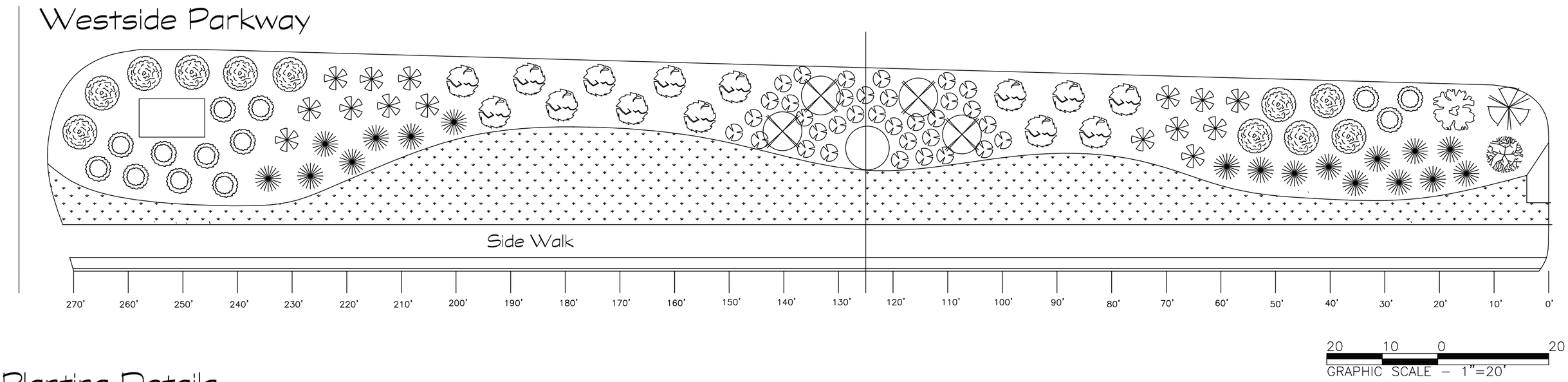

Planting Details

- 6) 6' Emerald Green Arborvitiae
- 13) 7gal Gold Mop Cypress
- 14) 6' Oak leaf Holly
- 15) 5gal Purple Diamond Loro.
- 18) 3' Adagio Maiden Grass
- 35) 3gal Encore Azalea "Autumn Bonfire"
- Existing Vitex
- 4) 30gal Natchez Crape Myrtle
- Existing Blue Atlas Cedar
- Existing Jap. Maple
- Bermuda Sod

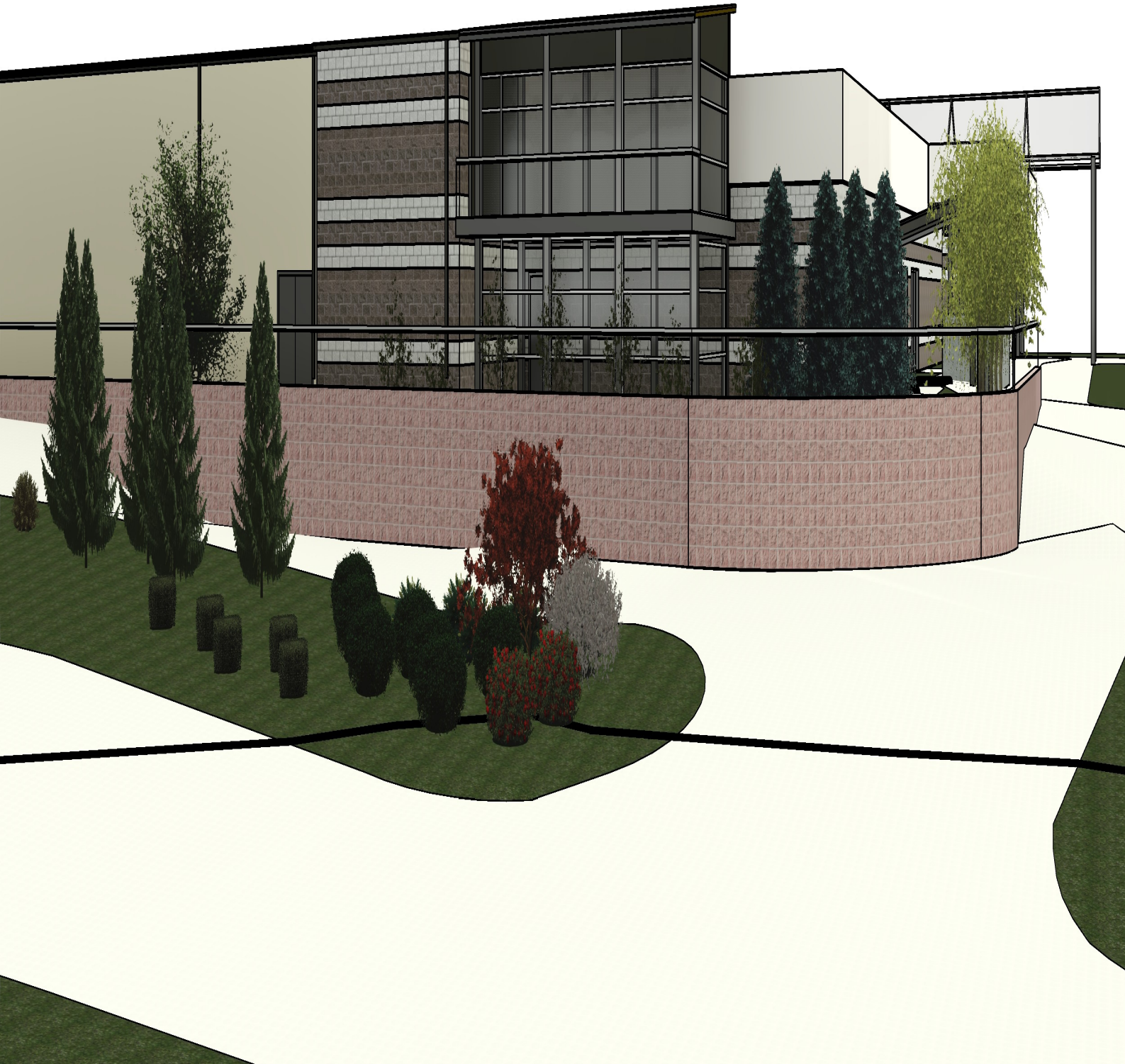

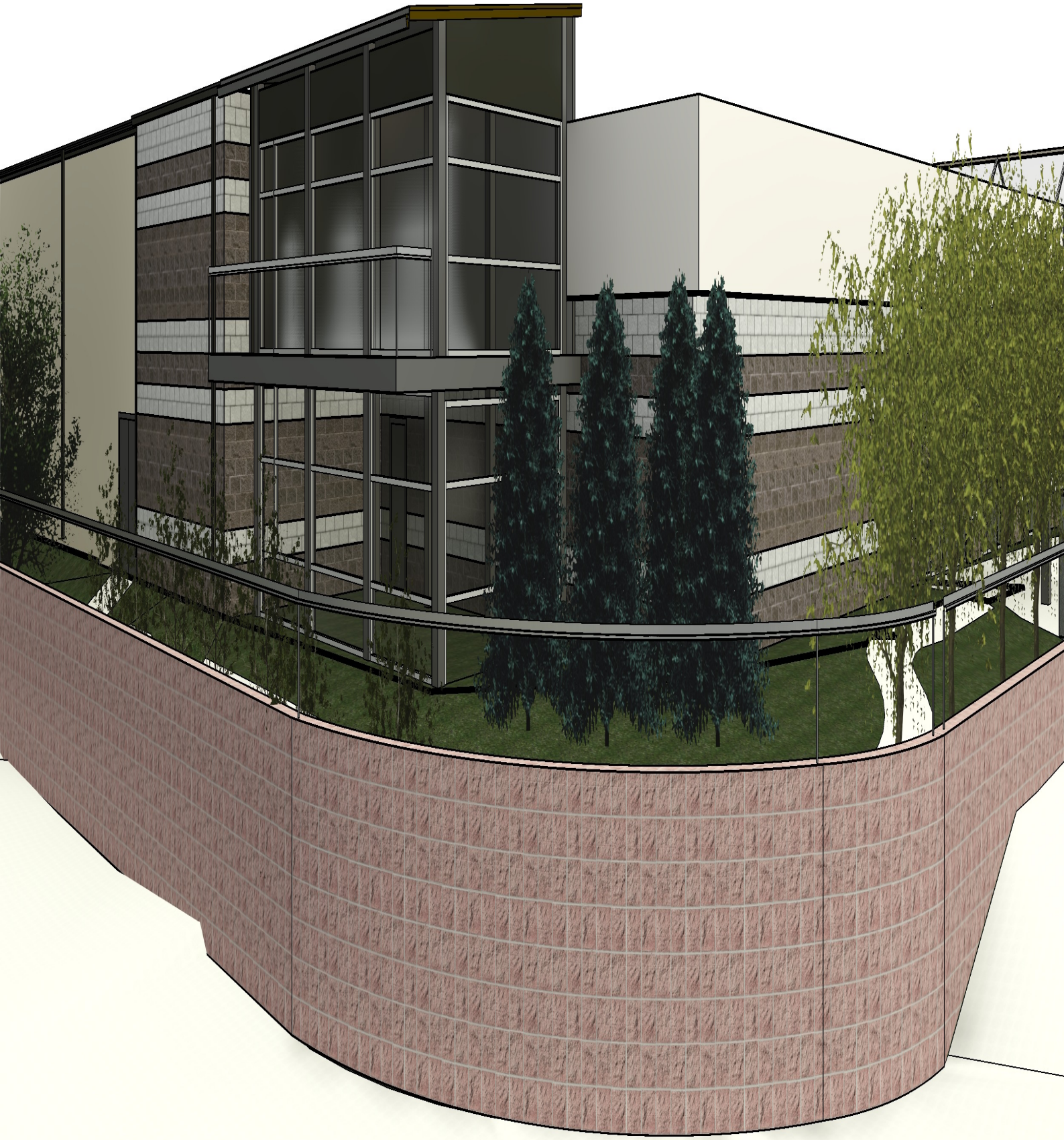

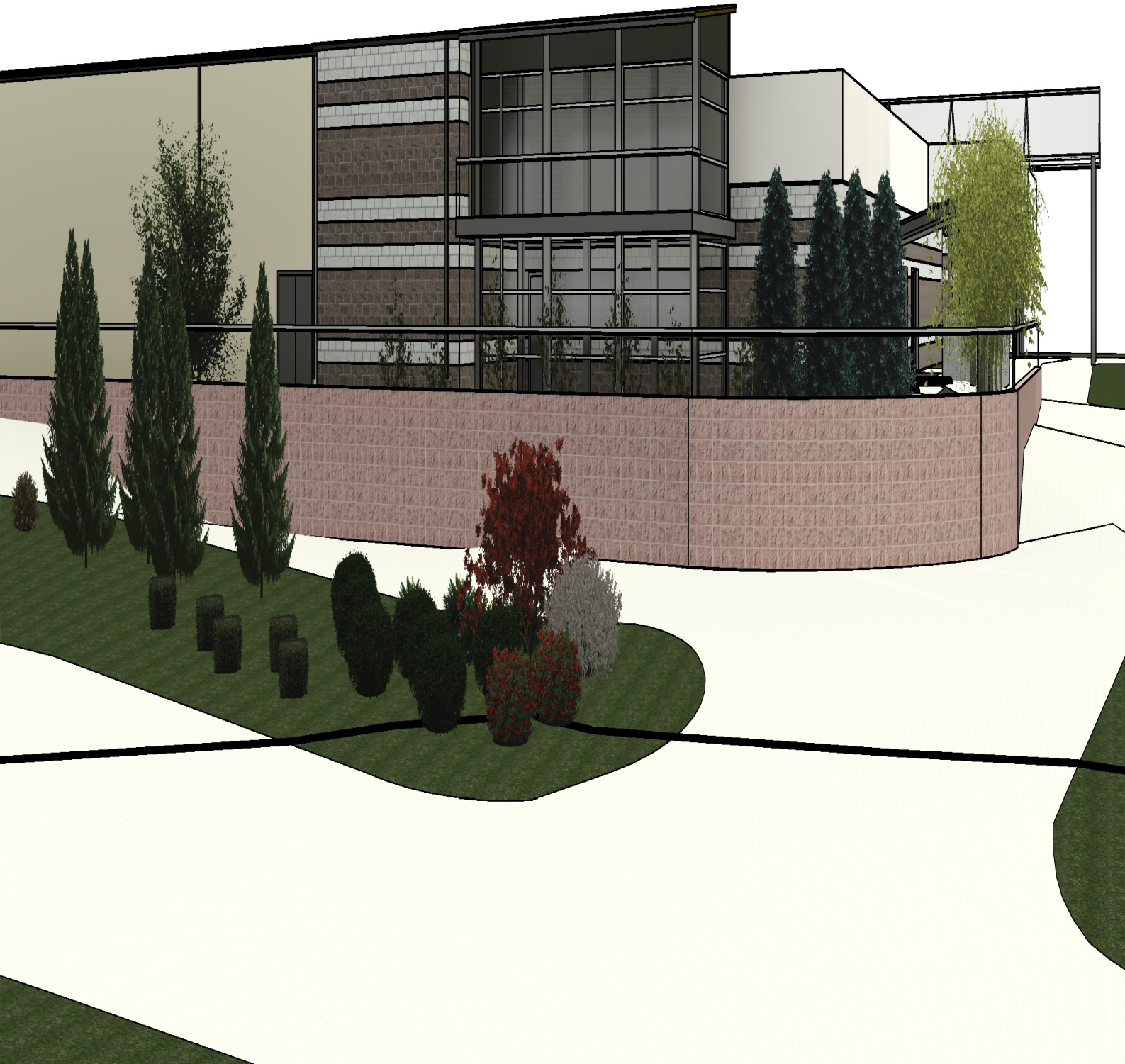

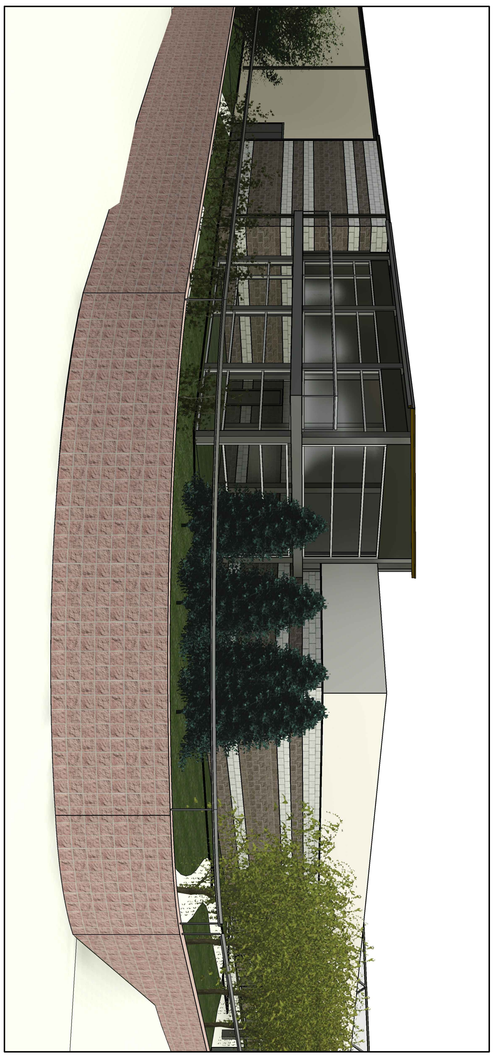

BALCONY RENDERINGS

SHEET NO.	A1-1
SHEET NAME	BALCONY RENDERINGS
DATE	11.5.2007
DRAWN BY	JHS
SCALE	1"=20'0"
PROJECT	FILM. TV. RECORD STUDIOS FOR: EINNOR STUDIOS THE "COOLER" 10000 DAVIS ROAD ALPHARETTA, GEOGRIA 30005

ARCADE, INC.
3877 THAYER TRACE, DULUTH, GEORGIA 30096
TEL./ W.M. (404) 731-2322
arcadeinc@aol.com

DATE	NO.	REVISION

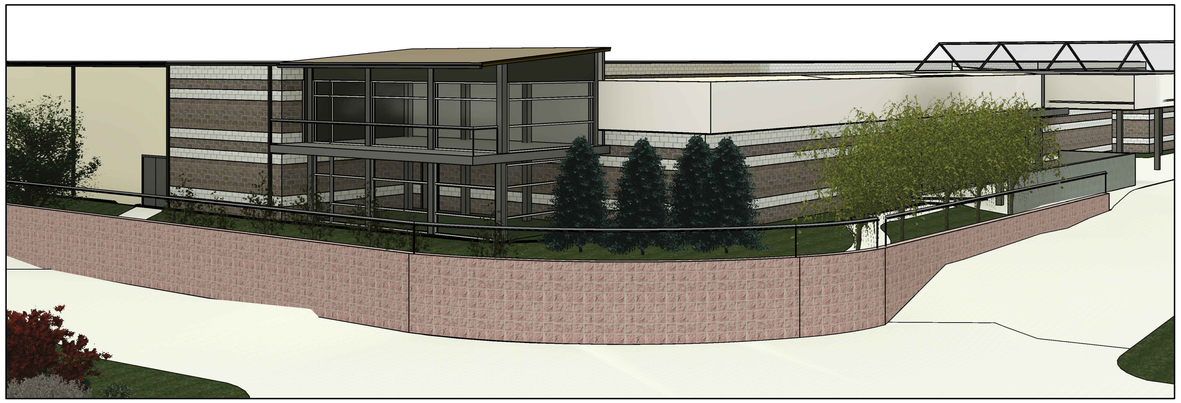

BALCONY RENDERINGS

DATE	NO.	REVISION

ARCADE, INC.
3877 THEATER TRACE, DULUTH, GEORGIA 30096
TEL./ F.M. (404) 731-2322
arcadeinc@aol.com

FILM, TV, RECORD STUDIOS FOR:
EINNOR STUDIOS
THE "COOLER" 10600 DAVIS ROAD
ALPHARETTA, GEORGIA 30009

DRAWN BY: MF
PRELIM. M-2105
SCALE
DATE 11, 3, 2021
JOB NO.

SHEET NAME:
BALCONY RENDERINGS

SHEET NO.
A1-2

CONSTRUCTION PLANS
FOR
VILLAGE PARK MILTON II, LLC

LDP # ###

11490 ALPHARETTA HWY, ALPHARETTA, GA 30009
FULTON COUNTY PROJECT # XX-XXXXX

BY
VILLAGE PARK SENIOR LIVING, LLC
3414 PEACHTREE ROAD NE, SUITE 730
ATLANTA GA 30326
TEL: 678 223-8560

24-HOUR CONTACT:
BRYAN HENDERSON
404 271-8403

GENERAL NOTES:

1. OWNER/DEVELOPER: **VILLAGE PARK SENIOR LIVING, LLC**
   3424 PEACHTREE RD SUITE 1780
   ATLANTA, GA 30326
   TEL: 678 677-8900
   CONTACT: BRYAN HENDERSON – bryan@galerieliving.com

2. SURVYOR/ENGINEER: **BLUE LANDWORKS LLC**
   5019 WEST BROAD STREET
   SUITE M230
   SUGAR HILL, GEORGIA 30518
   TEL: 678 804-8586
   CONTACT: JOHN NICOL, PE (jn@bluelandworks.com)
   GA PE #28657
   GA SSWCC LEVEL II CERTIFIED DESIGN PROFESSIONAL #14361

3. THIS PROPERTY IS SHOWN ON FULTON COUNTY TAX MAPS AS BEING PART OF THE 1ST LAND DISTRICT, LAND LOT 60, PARCEL ID(S) 12-234006000566 AND CONTAINING 4.90 ACRES.
4. THIS PROPERTY IS ZONED O-I (OFFICE INSTITUTIONAL).
5. PROPOSED USE: ASSISTED LIVING
   TOTAL AREA = 4.90 ACRES
   NUMBER OF COTTAGE UNITS = 17
   INTERIOR SETBACKS:
   MINIMUM FRONT SETBACK: 65 FEET
   MINIMUM SIDE SETBACK: 15 FEET
   MINIMUM REAR SETBACK: 15 FEET
6. THERE IS NO FLOODPLAIN ON THIS PROPERTY PER FEMA NFIP FIRM PANEL NO. 13121C0054F, DATED 9/18/13.
7. THIS SITE DOES NOT CONTAIN STATE WATERS REQUIRING AN UNDISTURBED 25' STATE WATERS BUFFER.
8. THIS SITE DOES NOT CONTAIN AREAS, STREAMS, AND/OR BODIES OF WATER DEPICTED AS WETLANDS ON THE U.S. DEPARTMENT OF INTERIOR, FISH, AND WILDLIFE SERVICE NATIONAL WETLANDS INVENTORY.
9. SOURCE OF TOPOGRAPHY IS FULTON COUNTY GIS AND SUPPLEMENTED BY GROUND-RUN TOPOGRAPHY PERFORMED BY BLUE LANDWORKS LLC, DATED JANUARY 2017. CONTOUR INTERVAL IS 2 FEET. REFERENCE DATUM IS NAVD 88.
10. WATER DISTRIBUTION AND SANITARY SEWER SERVICE TO BE PROVIDED BY FULTON COUNTY.
11. APPROVAL IS FOR THOSE UTILITIES WITHIN ALPHARETTA JURISDICTION ONLY. UTILITIES WITHIN FULTON COUNTY JURISDICTION MUST BE APPROVED PRIOR TO CONSTRUCTION.
12. ALL PAVEMENT MARKINGS IN RIGHT-OF-WAY MUST BE MUTCD STANDARDS.
13. ALL REQUIRED TRAFFIC STRIPING MUST MEET MUTCD AND GDOT PLAN SPECIFICATIONS AND MUST BE THERMO-PLASTIC.
14. ALL HANDI-CAP RAMP FORMS MUST BE APPROVED BY CITY LAND DISTURBANCE INSPECTOR PRIOR TO CONCRETE POUR.
15. NO WELLS OR SEPTIC SYSTEMS ARE PROPOSED OR EXIST ON SITE. OWNER WOULD LIKE TO LOCATE IRRIGATION WELL ON SITE.
16. CONTRACTOR IS TO PROVIDE THE CITY OF ALPHARETTA ENCROACHMENT PERMIT FOR ALL WORK WITHIN THE CITY'S RIGHT-OF-WAY AND TRAFFIC SIGNAL OR UTILITY RELOCATIONS WILL BE THE RESPONSIBILITY OF THE OWNER/DEVELOPER.
17. ALL UTILITY LOCATES AND RELOCATIONS, AND/OR DAMAGE WILL BE RESPONSIBILITY OF THE DEVELOPER/CONTRACTOR. DEVELOPER/ CONTRACTOR MUST CONTACT CITY OF ALPHARETTA LOCATE PERSONNEL DIRECTLY FOR TRAFFIC SIGNAL UTILITY LOCATES. PHONE 678-297-6200
18. SIDEWALKS AND ISLANDS MUST BE DESIGNED TO ACCEPT HANDI-CAP RAMPS AND LANDINGS THAT MEET ADA REQUIREMENTS (ALPHARETTA STANDARD 902)
19. ALL WALL AND MONUMENTS SIGNS SHALL BE PERMITTED SEPARATELY.
20. HIGH INTENSITY LIGHTING SOURCES SHALL BE CONCEALED FROM PUBLIC VIEW AND FROM ADJACENT RESIDENTIAL PROPERTIES AND SHALL NOT INTERFERE WITH TRAFFIC.
21. CONTRACTOR TO SECURE NECESSARY PERMITS TO REMOVE SEPTIC SYSTEM COMPONENTS.
22. TOTAL PROPOSED IMPERVIOUS AREA = 122,840 SF OR 2.82 AC. PERCENT IMPERVIOUS FOR SITE = 2.82/4.90 = 57.6%

REFERENCES:

"SURVEY FOR 11940 ALPHARETTA HIGHWAY FOR VILLAGE PARK SENIOR LIVING, LLC" BY BLUE LANDWORKS, LLC DATED DECEMBER 30, 2019.

COMMUNITY DEVELOPMENT NOTES:

1. AN 18-MONTH PERFORMANCE AND MAINTENANCE BOND WILL BE REQUIRED FOR ALL LANDSCAPING AND IRRIGATION.
2. PARKING LOT LIGHTS WILL BE LOCATED OUTSIDE OF LANDSCAPE ISLANDS. SITE LIGHTING MUST BE APPROVED BY THE ZONING DEPARTMENT PRIOR TO ISSUANCE OF ELECTRICAL PERMIT.
3. THE OWNER IS RESPONSIBLE FOR ANNUAL REPORTING OF THE WASTE GENERATION FOR THIS PROJECT ON AN ONGOING BASIS. THE WASTE GENERATION ANALYSIS MUST DEMONSTRATE A 25% OVERALL WASTE REDUCTION DUE TO RECYCLING.
4. OFF STREET PARKING SHALL BE PROVIDED AND MAINTAINED THROUGHOUT CONSTRUCTION.
5. ALL REVISIONS TO THESE PLANS MUST BE SUBMITTED TO THE CITY OF ALPHARETTA COMMUNITY DEVELOPMENT DEPARTMENT PRIOR TO CONTINUING CONSTRUCTION.
6. ALL ROOFTOP APPURTENANCES, SATELLITE DISHES AND/ OR OTHER COMMUNICATION DEVICES WILL BE SCREENED FROM ALL PUBLIC RIGHTS-OF-WAY.
7. ALL TEMPORARY AND PERMANENT SIGNS TO BE PERMITTED SEPARATELY.
8. CONTACT THE FOLLOWING DEPARTMENTS FOR APPROVAL OF THE PERMANENT CERTIFICATE OF OCCUPANCY: COMMUNITY DEVELOPMENT, ARBORIST, TRAFFIC ENGINEERING, AND FIRE MARSHAL. ALLOW A MINIMUM OF A 3-DAY NOTICE FOR A SITE INSPECTION APPONTMENT.
9. ON-SITE BURIAL IS NOT ALLOWED.
10. AN ENGINEER'S CERTIFICATION WILL BE REQUIRED FOR ALL RETAINING WALLS PRIOR TO ISSUANCE OF THE CERTIFICATE OF OCCUPANCY. ALL RETAINING WALLS GREATER THAN 4-FEET IN HEIGHT MUST OBTAIN A BUILDING PERMIT.
11. IRRIGATION NOTES:
    A. IRRIGATION SYSTEMS ARE NOT ALLOWED WITHIN THE PUBLIC RIGHT-OF-WAY. (SYSTEMS WILL BE ALLOWED INSIDE MEDIANS IF AN INDEMNIFICATION LETTER IS PROVIDED ABSOLVING THE CITY OF ALPHARETTA OF ANY RESPONSIBILITY FOR DAMAGES.)
    B. IRRIGATION SPRAY ONTO PUBLIC ROADWAYS IS NOT ALLOWED.
    C. IRRIGATION SYSTEMS MUST BE SHUT OFF OR OPERATED MANUALLY DURING WINTER MONTHS TO PREVENT UNNECESSARY ICE ON ROADS.

FIRE MARSHAL NOTES:

1. LOCATE FIRE DEPARTMENT SPRINKLER CONNECTION IN ACCESSIBLE LOCATION WITHIN 100 FEET OF A FIRE HYDRANT.
2. IN ACCORDANCE WITH THE 2006 INTERNATIONAL FIRE CODE, SECTION 503.6 SECURITY GATES, THE CITY OF ALPHARETTA FIRE AND EMERGENCY SERVICES, FIRE MARSHAL'S OFFICE HAS ADOPTED THE FOLLOWING REQUIREMENTS.
   1. ELECTRIC GATE MUST HAVE THE FOLLOWING EQUIPMENT:
      A. KNOX KEY SWITCH ENTRY SYSTEM
      B. SIREN OPERATING SYSTEM – SOS
      C. GATE CODE FOR KEY PAD. CODE CAN BE THE CHOICE OF PROPERTY OWNER.
   2. MANUALLY OPERATED GATES:
      A. KNOW PAD LOCK
3. THE FUEL TANK MUST BE APPROVED BY THE STATE FIRE MARSHALS OFFICE ALONG WITH THE CITY OF ALPHARETTA FIRE MARSHALS OFFICE. STATE FIRE MARSHAL PHONE NUMBER 404-656-9798.
4. KNOX BOX AND PIN PAD TO BE LOCATED AT THE SECURITY BOOTH. KNOX BOX IS TO CONTAIN A ONE TIME USE CODE FOR THE PIN PAD. ONCE ENTERED, ALL VEHICLE SECURITY DEVICES WILL DEACTIVATE.
5. A GEORGIA CERTIFICATE OF COMPETENCY HOLDER FOR AUTOMATIC FIRE SPRINKLER SYSTEMS WILL BE RESPONSIBLE FOR THE DESIGN AND INSTALLATION OF THE UNDERGROUND SUPPLY PIPING.
6. INSTALLATION OR REPAIR OF UNDERGROUND FIRE SPRINKLER WATER SUPPLIES SHALL BE PERFORMED BY AN UTILITY OR FIRE SPRINKLER CONTRACTOR OR PLUMBING CONTRACTOR LICENSED UNDER CHAPTER 11 TITLE 25 SECTION 25-11-7.
7. FIRE DEPARTMENT CONNECTIONS, IF INSTALLED UNDERGROUND SHALL HAVE A LISTED CHECK VALVE, AN AUTODRIP VALVE, A SIGN ON A PLATE OR FITTING READING, "AUTO-SPRINKLER/STANDPIPES," AND HOSE CONNECTIONS SHALL HAVE STANDARD THREADS AS SPECIFIED IN NFPA 1963.
8. FIRE HYDRANTS AND WATER MAINS ARE TO BE INSTALLED, FLUSHED AND UNDER PRESSURE BEFORE ANY COMBUSTIBLE CONSTRUCTION IS STARTED.
9. DURING CONSTRUCTION AND FOR PERMANENT ACCESS, ROADWAYS CONSTRUCTED OF AN ALL-WEATHER SURFACE CAPABLE OF SUPPORTING 75,000 POUNDS GROSS WEIGHT SHALL BE PROVIDED PER INTERNATIONAL FIRE CODE, CHAPTER 5, SECTION 503.2.3, 2006 EDITION.

WATER NOTES

1. WATER VALVE MARKERS SHALL BE PLACED AT ALL LOCATIONS WHERE WATER VALVES ARE NOT IN THE STREETS. WATER VALVES THAT ARE IN THE STREET WILL BE CLEARLY MARKED ON THE CURB.
2. ALL TEMPORARY AND PERMANENT WATER EASEMENTS MUST BE DRESSED AND GRASSED TO CONTROL EROSION PRIOR TO ACCEPTANCE. TREES SHALL NOT BE PLANTED IN THE PERMANENT EASEMENT AREA, OR WITHIN 5-FEET OF ANY UTILITY LINES.
3. ALL CONSTRUCTION METHODS AND MATERIALS USED IN THE FULTON COUNTY WATER SYSTEM MUST BE MADE OF DUCTILE IRON, AND COMPLY IN RESPECT TO ANS/AWWAA21.111/C111-85 STANDARD SPECIFICATIONS. PLANS THAT DO NOT MEET THE SPECIFICATIONS IN ALL RESPECTS WILL NOT BE ACCEPTED. (CLASS 50 DIP OR BETTER – CLASS 51 OR 52 IS ALSO ACCEPTABLE).
4. THE CONTRACTOR SHALL INSTALL CAST IRON WATER METER BOXES AND 1" TYPE "K" COPPER SERVICE LINES FOR ALL SERVICES INCLUDING CUL-DE-SACS.
5. LOT LINES WILL BE CLEARLY IDENTIFIED AND MARKED ON TOP OF CURBS BEFORE THE WATER MAIN IS INSTALLED.
6. CONDUIT ACROSS THE ROAD, FOR INSTALLATION OF WATER SERVICES, IS TO BE INSTALLED BY THE DEVELOPER PRIOR TO PAVING. MATERIAL FOR CONDUIT SHALL BE PVC PIPE OR APPROVED ALTERNATE AND IS TO BE INSTALLED 3-FEET BELOW FINAL GRADE.
7. A 6" P.V.C. CONDUIT WILL BE USED TO ACCESS ALL LOTS ON OPPOSITE SIDES OF THE STREET, EXCEPT IN CUL-DE-SACS. INSPECTOR MUST BE NOTIFIED 24 HOURS BEFORE CONSTRUCTION BEGINS.
8. THRUST BLOCKING WILL BE USED AT ALL BENDS, PLUGS, TEES, AND FIRE HYDRANTS.
9. FIRE HYDRANTS SHOWN IN THE RADIUS OF A CURVE SHALL BE FIELD ADJUSTED SO THAT THE ACTUAL INSTALLATION OF FIRE HYDRANTS WILL BE OUTSIDE OF CURVE RADIUS.
10. ANY CHANGES TO THE WATER DRAWINGS MUST BE APPROVED BY FULTON COUNTY.
11. ALL LINES 6" DIAMETER OR GREATER MUST BE PRESSURE TESTED AT 250 PSI FOR A MINIMUM OF TWO (2) HOURS.
12. WATER TAPS, SERVICE LINES, AND METER BOXES WILL BE INSTALLED BY THE DEVELOPER PER CURRENT FULTON COUNTY SPECIFICATIONS.
13. WHEN CONNECTING TO A 10" WATER MAIN OR GREATER AND THE PROPOSED WATER LINE IS 600' LONG, A 10" WATER LINE SHALL BE INSTALLED OR SHALL HAVE A LOOP SYSTEM.
14. NOTIFY FULTON COUNTY INSPECTOR 24-HOURS PRIOR TO CONSTRUCTION.

SANITARY SEWER NOTES

1. ALL WASTEWATER PIPE CONSTRUCTION SHOWN ON THESE PLANS MUST CONFORM TO FULTON COUNTY'S STANDARDS AND SPECIFICATIONS, INCLUDING SANITARY SEWER REGULATIONS LATEST COPY.
2. CONTRACTOR MUST FIELD VERIFY THE LOCATION AND ELEVATION OF ALL KNOWN AND UNKNOWN UNDERGROUND UTILITIES.
3. ALL TEMPORARY AND PERMANENT WASTEWATER EASEMENTS MUST BE DRESSED AND GRASSED TO CONTROL EROSION PRIOR TO ACCEPTANCE. TREES SHALL NOT BE PLANTED IN THE PERMANENT EASEMENT AREA, OR WITHIN 5-FEET OF ANY UTILITY LINES.
4. AS-BUILT DRAWINGS AND MAINTENANCE BOND(S) MUST BE SUBMITTED AND ARE REQUIRED PRIOR TO INSPECTION AND ACCEPTANCE. DIGITAL AS-BUILT WILL BE REQUIRED. NOTE THAT DIGITAL AS-BUILTS WILL BE REQUIRED AT THE COMPLETION OF THE PROJECT. PLEASE SEE: HTTP://WWW.FULTONCOUNTYGA.GOV/IMAGES/STORIES/WR/DEVELOPMENT/CAD_STANDARDS.PDF FOR THE REQUIREMENTS. MAINTENANCE BONDS ARE DUE AT FINAL APPROVAL OF THE AS-BUILTS.
5. NEOPRENE COUPLINGS WITH STAINLESS STEEL BANDS AND SHEAR RINGS ARE REQUIRED FOR JOINING DIFFERENT TYPES OF SANITARY SEWER PIPES.
6. POOLS SHALL NOT DRAIN INTO WASTEWATER PIPE SYSTEMS. POOLS SHALL DRAIN INTO AN APPROVED INDIVIDUAL ONSITE WASTEWATER MANAGEMENT SYSTEM.
7. LOW PRESSURE AIR TESTING REQUIRED FOR ALL WASTEWATER PIPE SYSTEMS. THIS TEST MUST MEET ALL REQUIREMENTS AS OUTLINED IN UNI-B-06 OR CURRENT REVISION. A FULTON COUNTY INSPECTOR MUST BE PRESENT DURING TESTING.
8. ISSUANCE OF THIS PERMIT DOES NOT IN ANY WAY IMPLY THAT WASTEWATER TAPS FOR BUILDING PERMITS WILL BE ISSUED. CONTACT THE DEPARTMENT OF PUBLIC WORKS, WATER RESOURCES DIVISION AT (404) 612-7400 FOR FURTHER INFORMATION.
9. CONTRACTOR SHALL FIELD VERIFY THE LOCATIONS AND INVERT ELEVATIONS OF WASTEWATER PIPES FOR A CONNECTION TO EXISTING WASTEWATER SYSTEMS.
10. ANY CHANGES TO THE SEWER DRAWINGS MUST BE APPROVED BY FULTON COUNTY.
11. FOR ALL PROJECTS UTILIZING INDIVIDUAL ONSITE WASTEWATER MANAGEMENT SYSTEMS DESIGN AND PROVISIONS SHALL BE IN CONFORMANCE WITH FULTON COUNTY DEPARTMENT OF HEALTH AND WELLNESS REGULATIONS.
12. USF 7635 BOX REQUIRED FOR WASTEWATER CLEANOUTS IN PAVED AREA PER FULTON COUNTY STANDARD DETAIL 709.
13. COMPACTION OF THE BACK FILL OF ALL TRENCHES SHALL BE COMPACTED TO AT LEAST 90% STANDARD PROCTOR DENSITY. BACKFILL MATERIAL SHALL BE FREE FROM ROOTS, STUMPS, OR OTHER FOREIGN DEBRIS, AND SHALL BE PLACED AT OR NEAR OPTIMUM MOISTURE CONTENT. CORRECTION OF ANY TRENCH SETTLEMENT WITHIN A YEAR FROM THE DATE OF APPROVAL WILL BE THE RESPONSIBILITY OF THE CONTRACTOR. COMPACTION OF THE BACK FILL OF ALL TRENCHES LOCATED UNDER PAVEMENT SHALL BE COMPACTED TO AT LEAST 95% STANDARD PROCTOR DENSITY.
14. SANITARY SEWER LATERALS SHOULD BE MARKED WITH 4"X4"POST WITH MIN. 4-FEET ABOVE GROUND. THE TOP 1' SHOULD BE PAINTED GREEN. EACH LATERAL IS TO BE BROUGHT TO THE GROUND SURFACE IN ACCORDANCE WITH FULTON COUNTY STANDARD 909.
15. ALL REQUIRED OFF SITE EASEMENTS SHALL BE DEDICATED TO FULTON COUNTY PRIOR TO UTILITY PERMITTING. ALL PUBLIC ON- SITE EASEMENTS FOR OTHER THAN SINGLE FAMILY RESIDENTIAL PROJECTS THAT WILL BE FINAL PLATTED SHALL BE DEDICATED TO FULTON COUNTY PRIOR TO WATER RESOURCES PERMIT APPROVAL.
16. FOR ALL PROJECTS CONTAINING PVC WASTEWATER PIPES, ALSO INCLUDE THE FOLLOWING NOTES: (SEE ATTACHED CONDITION FOR PVC).
    a. PIPE SHALL BE ASTM D3034, SDR35 IN 12.5 FOOT LAYING LENGTHS WITH ELASTOMERIC SEALED JOINTS IN ACCORDANCE WITH ASTM D3212.
    b. PIPE BEDDING SHALL BE #57, SHARP, ANGULAR, CRUSHED STONE. BEDDING SHALL EXTEND A MINIMUM OF 4" BELOW THE PIPE AND EXTEND TO THE TOP OF THE PIPE. THE BEDDING SHALL BE COMPACTED BY "SLICING WITH A FLAT SHOVEL". THE WIDTH OF THE DITCH MUST BE IN ACCORDANCE WITH OSHA SAFETY STANDARDS.
    c. INITIAL BACKFILL: AFTER BEDDING, COMPLETE INITIAL BACKFILL WITH #57 STONE. IF NO ROCK IS ENCOUNTERED, INITIAL BACKFILL SHALL EXTEND TO A HEIGHT 6" ABOVE OF THE TOP OF THE PIPE, OTHERWISE INITIAL BACKFILL SHALL EXTEND TO 12" ABOVE THE TOP OF THE PIPE.
    d. FITTINGS FOR LATERAL CONNECTIONS SHALL BE 45° WYES AND BENDS. PROVIDE PVC PIPE STOPPERS FOR EACH LATERAL. PROVIDE SPECIAL WATERTIGHT CONNECTIONS AT MANHOLES AND TRANSITIONS TO DUCTILE IRON PIPE AS RECOMMENDED BY THE PIPE MANUFACTURER.
    e. AFTER INSTALLATION, A DEFLECTION TEST IS REQUIRED. INITIAL DEFLECTION SHALL BE LIMITED TO 3% OF THE UNDEFLECTED DIAMETER. A SECOND TEST SHALL BE MADE AT LEAST 8 MONTHS AFTER THE INSTALLATION BUT BEFORE FINAL ACCEPTANCE. AT THAT TIME DEFLECTION SHALL BE LIMITED TO 5% OF THE UNDEFLECTED DIAMETER.
17. PLEASE ADD THE FOLLOWING NOTES TO CONSTRUCTION PLANS.
    ALL MANHOLES LOCATED WITHIN A PAVED AREA SHALL HAVE CONCENTRIC CONE SECTIONS AND FLANGE DOWN FRAMES AND COVERS. ALL MANHOLES LOCATED WITHIN AN UNPAVED AREA SHALL HAVE ECCENTRIC CONE SECTIONS WITH BOLT DOWN FLANGE UP FRAME AND COVERS, OR HINGED CAST IN PLACE LOCKABLE COVERS. ALL MANHOLES LOCATED WITHIN A FLOOD PRONE AREA SHALL HAVE ECCENTRIC CONE SECTIONS WITH BOLT DOWN GASKETED FLANGE UP FRAME AND COVERS. RAISE TOP OF MANHOLES IN LANDSCAPE AREAS TO 0.5-FEET ABOVE GRADE.
18. NOTIFY FULTON COUNTY INSPECTOR 24-HOURS PRIOR TO CONSTRUCTION.

overhead 811 underground
Know what's below. Call before you dig.

CALL 811 BEFORE ANY EXCAVATION WORK BEGINS OR ANY WORK BEGINS WITHIN TEN FT.(10') OF OVERHEAD POWER LINES OF 750 VOLTS OR MORE. SMART DIGGING MEANS CALLING 811 BEFORE EACH JOB. WHETHER YOU ARE A HOMEOWNER OR A PROFESSIONAL EXCAVATOR, ONE CALL TO 811 GETS YOUR UNDERGROUND UTILITY LINES MARKED FOR FREE.

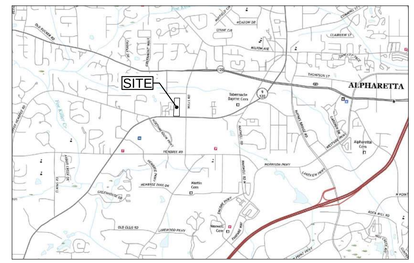

VICINITY MAP
SCALE: 1" = 4,000'
SOURCE: GIS

ISSUE NO.	DATE	DESCRIPTION
1	10/08/2021	DESIGN DEVELOPMENT REVIEW SET

GEORGIA REGISTERED No. 27657 PROFESSIONAL ENGINEER JONATHAN H. NICOL

SHEET INDEX

BOUNDARY SURVEY	V-100
EXISTING CONDITIONS AND DEMOLITION	C-001
SITE PLAN	C-100
WATER DISTRIBUTION PLAN	C-110
SANITARY SEWER PLAN	C-120
GRADING AND DRAINAGE PLAN	C-130
SANITARY SEWER AND STORM PROFILES	C-150
CONSTRUCTION DETAILS	C-170 TO C-178
ESPCP – NOTES AND CERTIFICATIONS	ER-001
ESPCP – SAMPLING PLAN	ER-002
ESPCP – INITIAL PHASE	ER-101
ESPCP – INTERMEDIATE GRADING PHASE	ER-102
ESPCP – FINAL GRADING AND STABILIZATION PHASE	ER-103
ESPCP – DETAILS – STRUCTURAL PRACTICES & VEGETATIVE MEASURES	ER-110 TO ER-113
TREE SURVEY	TR-001
TREE PROTECTION PLAN NOTES (BY IRONWOOD)	L-10.0
TREE REPLACEMENT PLAN (BY IRONWOOD)	L-10.1
TREE REPLACEMENT DETAILS (BY IRONWOOD)	L-10.2

INSTRUCTIONS TO CONTRACTORS:

GENERAL PROVISIONS

1. ALL WORK SHALL COMPLY WITH APPLICABLE STATE, FEDERAL AND LOCAL CODES AND ALL NECESSARY LICENSES AND PERMITS SHALL BE OBTAINED BY THE CONTRACTOR AT HIS EXPENSE UNLESS PREVIOUSLY OBTAINED BY OWNER.
2. ALL WORK SHALL BE PERFORMED IN A FINISHED AND WORKMAN LIKE MANNER TO THE ENTIRE SATISFACTION OF THE OWNER, AND IN ACCORDANCE WITH THE BEST RECOGNIZED TRADE PRACTICES. THE CONTRACTOR SHALL WARRANTY ALL WORK TO THE OWNER FOR A MINIMUM PERIOD OF 18 MONTHS FOLLOWING COMPLETION OF CONSTRUCTION.
3. DEVIATIONS FROM THESE PLANS WITHOUT THE PRIOR CONSENT OF THE OWNER OR HIS REPRESENTATIVES MAY BE CAUSE FOR THE WORK TO BE UNACCEPTABLE.
4. THE DRAWINGS AND SPECIFICATIONS ARE INTENDED TO COVER A COMPLETE PROJECT READY FOR USE, AND ALL ITEMS NECESSARY FOR A COMPLETE AND WORKABLE JOB SHALL BE FURNISHED AND INSTALLED.
5. ALL MATERIALS SHALL BE NEW, UNLESS USED OR SALVAGED MATERIALS ARE AUTHORIZED BY THE OWNER AND APPROPRIATE AUTHORITIES.
6. THE CONTRACTOR SHALL FURNISH, MAINTAIN, REMOVE AND REDRESS ALL NECESSARY BARRICADES AROUND THE WORK AND SHALL PROVIDE PROTECTION AGAINST WATER DAMAGE AND SOIL EROSION.
7. IT IS THE RESPONSIBILITY OF THE CONTRACTOR TO DETERMINE THE LOCATION OF ALL EXISTING UNDERGROUND UTILITIES AND TO TAKE WHATEVER STEPS NECESSARY TO PROVIDE FOR THEIR PROTECTION AND TO MAINTAIN LOCATIONS FOR THE DURATION OF THE PROJECT. THE ENGINEER HAS DILIGENTLY ATTEMPTED TO LOCATE AND INDICATE ALL EXISTING FACILITIES ON THESE PLANS, HOWEVER, THIS INFORMATION IS SHOWN FOR THE CONTRACTOR'S CONVENIENCE ONLY AND IS NOT GUARANTEED. THE CONTRACTOR IS TO CONTACT THE UTILITY COMPANIES FOR EXACT LOCATION OF THEIR UTILITIES PRIOR TO STARTING CONSTRUCTION.
8. CONTRACTOR SHALL COORDINATE LOCATION AND INSTALLATION OF ALL UNDERGROUND UTILITIES AND APPURTENANCES TO MINIMIZE DISTURBING CURBING, PAVING, AND COMPACTED SUBGRADE. ALL UNDERGROUND UTILITIES, INCLUDING THOSE INSTALLED BY OTHERS (ELECTRICAL CONDUIT, GAS, TELEPHONE, AND ANY OTHER MISCELLANEOUS) SHALL BE IN-PLACE PRIOR TO THE PLACEMENT OF BASE COURSE MATERIAL IF POSSIBLE.
9. IF THE CONTRACTOR, IN THE COURSE OF WORK, FINDS ANY DISCREPANCY BETWEEN THE PLANS AND THE PHYSICAL CONDITIONS OF THE LOCALITY, OR ANY ERRORS OR OMISSIONS IN THE PLANS OR THE LAYOUT AS GIVEN BY THE ENGINEER, IT SHALL BE HIS DUTY TO IMMEDIATELY INFORM THE ENGINEER, IN WRITING, AND ENGINEER WILL PROMPTLY VERIFY THE SAME. ANY WORK DONE AFTER SUCH DISCOVERY, UNTIL AUTHORIZED, WILL BE AT THE CONTRACTOR'S RISK.
10. CONTRACTOR SHALL PROVIDE THE ENGINEER WITH ONE (1) RED-LINE COPY OF AN "AS-BUILT" PLAN OF ALL UNDERGROUND UTILITIES WITHIN PUBLIC EASEMENT OR RIGHT-OF-WAY SHOWING THE LOCATION OF EACH WITH ALL DIMENSIONS SHOWN NECESSARY TO ACCURATELY LOCATE EACH UNDERGROUND UTILITY, FOR USE BY THE ENGINEER IN PREPARING FORMAL RECORD DRAWINGS FOR FULTON COUNTY APPROVAL.
11. SIGNS (EXCEPT HANDICAPPED PARKING SIGNS), LOCATION, NUMBER, AND SIZE ARE NOT APPROVED UNDER THIS DEVELOPMENT PERMIT. A SEPARATE PERMIT IS REQUIRED.

GEOTECHNICAL

1. SOILS TESTING AND ON-SITE INSPECTION MAY BE PERFORMED BY AN INDEPENDENT GEOTECHNICAL ENGINEER SELECTED AND PAID BY THE OWNER. IN THE EVENT OF CONFLICT BETWEEN INSTRUCTIONS BY THE ENGINEER AND RECOMMENDATIONS PROVIDED BY THE OWNER'S GEOTECHNICAL ENGINEER, THE CONTRACTOR WILL ADHERE TO THE MOST STRINGENT.
2. CONTRACTOR SHALL PROVIDE ANY EXCAVATION AND MATERIAL SAMPLES NECESSARY TO CONDUCT REQUIRED SOIL TESTS. ALL ARRANGEMENTS AND SCHEDULING FOR TESTING SHALL BE THE CONTRACTOR'S RESPONSIBILITY.
3. GEOTECHNICAL ENGINEER SHALL PROVIDE COPIES OF TEST REPORTS TO THE CONTRACTOR, THE OWNER AND THE OWNER'S REPRESENTATIVE AND SHALL NOTIFY THE OWNER, HIS REPRESENTATIVE AND THE CONTRACTOR PROMPTLY SHOULD WORK PERFORMED BY THE CONTRACTOR FAIL TO MEET THESE SPECIFICATIONS.
4. COMPACT SOIL TO NOT LESS THAN THE FOLLOWING PERCENTAGES OF MAXIMUM DRY DENSITY ACCORDING TO ASTM D 1557:
   - UNDER STRUCTURES, BUILDING SLABS, STEPS, AND PAVEMENTS, COMPACT THE TOP 12 INCHES BELOW SUBGRADE AND EACH LAYER OF BACKFILL OR FILL MATERIAL AT 95 PERCENT DRY DENSITY.
   - UNDER WALKWAYS, COMPACT THE TOP 6 INCHES BELOW THE SUBGRADE AND EACH LAYER OF BACKFILL OR FILL MATERIAL AT 95 PERCENT MAXIMUM DRY DENSITY.
   - UNDER LAWN OR UNPAVED AREAS, COMPACT THE TOP 6 INCHES BELOW SUBGRADE AND EACH LAYER OF BACKFILL OR FILL MATERIAL AT 90 PERCENT MAXIMUM DENSITY.

EARTHWORK/GRADING

1. EARTHWORK AND GRADING SHALL BE PERFORMED IN ACCORDANCE WITH THE GEOTECHNICAL ENGINEER'S SPECIFICATIONS AND RECOMMENDATIONS, OR WITH SECTIONS 201-221 OF GA DOT'S STANDARD SPECIFICATIONS FOR ROAD AND BRIDGE CONSTRUCTION IF NOT COVERED BY THE GEOTECHNICAL ENGINEER'S SPECIFICATIONS, EXCEPT AS OTHERWISE NOTED.
2. MAXIMUM SLOPE OF FILL EMBANKMENT SHALL BE 2 FEET HORIZONTAL TO 1 FOOT VERTICAL UNLESS OTHERWISE SHOWN.
4. SEE NOTE 4 UNDER "PAVING AND CURBS".
4. SLOPE GRADES TO DIRECT WATER AWAY FROM BUILDINGS AND TO PREVENT PONDING.
5. EXCESS EARTH CUT MATERIALS, IF ANY, SHALL BE PLACED AT A LOCATION ON OR NEAR THE SITE AS DESIGNATED BY THE OWNER.

STORM DRAINAGE

1. ALL STORM DRAINAGE PIPE SHALL BE LAID ON SMOOTH, CONTINUOUS GRADES WITH NO VISIBLE BENDS AT THE JOINTS. ALL TRENCHING, PIPE LAYING AND BACKFILLING SHALL BE IN ACCORDANCE WITH FEDERAL OSHA REGULATIONS, CITY OF ALPHARETTA DEVELOPMENT REGULATIONS AND STATE COA REGULATIONS.
2. CONSTRUCTION OF STORM DRAINAGE STRUCTURES SHALL BE IN ACCORDANCE WITH THE DETAILS INCLUDED IN THE CONSTRUCTION DRAWINGS AND RELATED GEORGIA D.O.T. AND CITY OF ALPHARETTA SPECIFICATIONS.

SANITARY SEWER

1. ALL SANITARY SEWER PIPE SHALL BE LAID ON SMOOTH, CONTINUOUS GRADES WITH NO VISIBLE BENDS AT THE JOINTS. ALL TRENCHING, PIPE LAYING AND BACKFILLING SHALL BE IN ACCORDANCE WITH FEDERAL OSHA REGULATION AND WITH THE APPLICABLE SECTIONS OF THE FULTON COUNTY SANITARY SEWER STANDARDS.
2. THE MINIMUM HORIZONTAL DISTANCE BETWEEN PUBLIC WATER AND SEWER LINES IS TEN FEET. THE MINIMUM VERTICAL CLEARANCE SHALL BE EIGHTEEN INCHES.
3. ALL SANITARY SEWER LATERALS SHALL BE PLUGGED AND MARKERS INSTALLED SO THAT THEY CAN BE EASILY FOUND AFTER BACKFILLING.
4. SEWER SERVICE LATERALS SHALL BE PERMANENTLY MARKED ON THE CURB.
5. ALL TIE-INS TO EXISTING MANHOLES SHALL BE CORED. ALL MANHOLES REQUIRE "KOR-N-SEAL" OR EQUAL RUBBER BOOTS.
6. CONTRACTOR SHALL SET THE SANITARY SEWER MANHOLE LIDS AT FINISHED GRADE.

PAVING AND CURBS

1. BASE COURSE MATERIALS, EQUIPMENT, METHODS OF CONSTRUCTION AND WORKMANSHIP SHALL CONFORM TO "DEPARTMENT OF TRANSPORTATION, STATE OF GEORGIA, STANDARD SPECIFICATIONS", MOST RECENT EDITION, SECTION 300 AND OTHER SECTIONS REFERRED TO THEREIN.
2. ASPHALTIC CONCRETE SURFACE COURSE AND ASPHALT PRIME MATERIALS, EQUIPMENT, METHODS OF CONSTRUCTION AND WORKMANSHIP SHALL CONFORM TO "DEPARTMENT OF TRANSPORTATION, STATE OF GEORGIA, STANDARD SPECIFICATIONS", MOST RECENT EDITION, SECTION 400, 412, 413, AND OTHER SECTIONS REFERRED TO THEREIN.
3. CONCRETE CURBS SHALL BE CONSTRUCTED IN ACCORDANCE WITH DETAILS SHOWN ON THE PLANS. MATERIALS, EQUIPMENT, METHODS OF CONSTRUCTION AND WORKMANSHIP SHALL CONFORM TO "DEPARTMENT OF TRANSPORTATION, STATE OF GEORGIA, STANDARD SPECIFICATIONS", MOST RECENT EDITION, SECTION 441 AND OTHER SECTIONS REFERRED TO THEREIN.
4. THE CONTRACTOR IS RESPONSIBLE FOR THE BACKFILLING OF CURB.
5. ALL CONCRETE CURB SHALL BE 3,000 PSI AT 28 DAYS, WITH A MAXIMUM SLUMP OF 2", UNLESS NOTED OTHERWISE.
6. ALL EXPOSED CONCRETE TO HAVE A FINE HAIR-BROOMED FINISH.

EROSION AND SEDIMENT CONTROL

1. SEE "ESPCP NOTES & DETAILS" SHEETS FOR EROSION AND SEDIMENT CONTROL NOTES.
2. CONSTRUCTION EXIT PADS SHALL BE INSTALLED BY THE CONTRACTOR AT EACH CONS

DEMOLITION REFERENCES:

X –TREE REMOVAL, SEE DEMOLITION REFERENCES #5

1. REMOVE EXISTING FENCING INCLUDING FOOTERS, POSTS, GATES AND ASSOCIATED HARDWARE.
2. REMOVE EXISTING BUILDING AND PLAZA AREA, INCLUDING ALL UTILITY CONNECTIONS, FENCING, PAVEMENT, SITE FURNISHINGS, ETC. SEE BUILDING DEMOLITION NOTE FOR ADDITIONAL INFORMATION.
3. REMOVE EXISTING GRAVEL SURFACING, CONCRETE PAVEMENT AND ASPHALT PAVEMENT. SEE C–100 FOR ADDITIONAL INFORMATION.
4. REMOVE EXISTING CURB AND GUTTER.
5. REMOVE EXISTING TREE. FULLY REMOVE STUMP.
6. REMOVE EXISTING WALLS.
7. REMOVE EXISTING STORM SEWER. REMOVE EXISTING DETENTION POND OUTLET STRUCTURE AT THE END OF THE INTERMEDIATE EROSION CONTROL PHASE.
8. REMOVE EXISTING SANITARY SEWER.
9. REMOVE EXISTING POWER. CONTRACTOR TO COORDINATE WITH POWER PROVIDER.
10. OWNER/CONTRACTOR TO COORDINATE WITH GA POWER FOR REMOVAL OF POWER POLE AND LIGHT FIXTURE.

STRUCTURE TO BE DEMOLISHED

PAVEMENT TO BE DEMOLISHED

–NOTES FOR DEMOLITION WITHIN A CRITICAL ROOT ZONE (CRZ) OF SPECIMEN TREES
(RADIUS OF CRZ = 1.3 FEET * DBH)

1. PRIOR TO BEGINNING WORK MULCH ENTIRE CRZ OF SPECIMEN TREES, WHERE ALLOWABLE, WITH WOOD CHIP MULCH TO A DEPTH OF 3–4". MULCH MUST NOT TOUCH THE TRUNK OF ANY TREES.
2. BEGIN SPECIMEN TREE CARE PER THE APPROVED PLAN AND ASSOCIATED TIMELINES.
3. ALL EFFORTS WILL BE MADE TO LIMIT THE DISTURBANCE WITHIN THE STRUCTURAL ROOT PLATE (RADIUS OF SRP – .5 FEET * DBH) OF ANY TREES TO BE PRESERVED.
4. LOCATION OF TRUCKS, DUMPSTERS, BACKHOES, EXCAVATORS OR OTHER MECHANIZED EQUIPMENT NOT TO GO WITHIN CRITICAL ROOT ZONE (CRZ) OR APPROVED TREE SAVE AREA.
5. DEMOLITION WITHIN A CRZ MUST TAKE PLACE FROM OUTSIDE THE CRZ OR APPROVED TREE SAVE AREA BY REACHING IN WITH AN EXCAVATOR OR SIMILAR WITH LITTLE TO NO SOIL DISTURBANCE.
6. DEMOLITION MAY ALSO BE ACCOMPLISHED BY HAND WITHOUT THE USE OF HEAVY MECHANIZED EQUIPMENT SUCH AS EXCAVATORS, BOBCATS, AND DINGOES OR SIMILAR.
7. CLEAN CUT ANY EXPOSED, RIPPED, OR TORN ROOTS GREATER THAN 1/2" IN DIAMETER AND COVER CUT ENDS WITH NATIVE OR AMENDED SOILS AND WOOD CHIP MULCH TO A DEPTH OF 3–4".
8. AFTER DEMOLITION IS COMPLETE MULCH REMAINDER OF CRZ WITH WOOD CHIP MULCH TO A DEPTH OF 3–4" AND MOVE WIRE BACK TREE SAVE FENCE TO FULL CRZ OR APPROVED LIMITS OF DISTURBANCE.
9. ALL WORK WITHIN THE CRZ OF SPECIMEN TREES MUST BE SUPERVISED OR PERFORMED BY AN ISA CERTIFIED ARBORIST, GA REGISTERED FORESTER, OR ASCA REGISTERED CONSULTING ARBORIST.
10. THE CITY OF ALPHARETTA MUST BE NOTIFIED OF SPECIFIC TIMELINE OF THE WORK AS WELL AS THE TREE CARE PRIOR TO ANY WORK BEGINNING ON THE DEMOLITION AND RESERVES THE RIGHT TO BE PRESENT AT ANY AND ALL STEPS IN THIS PROCESS.

THE CITY ARBORIST MUST RECEIVE FOR REVIEW AND APPROVAL PRIOR TO AND DEMOLITION BEGINNING:

A SPECIFIC TREE CARE PLAN TAILORED TO THE INDIVIDUAL TREES AND SITE CONDITIONS MUST BE DEVELOPED BY AN ISA CERTIFIED ARBORIST, GA REGISTERED FORESTER, OR ASCA REGISTERED CONSULTING ARBORIST. THIS PLAN MUST BE PROVIDED TO THE CITY ARBORIST FOR REVIEW AND APPROVAL PRIOR TO ANY SIGN OFFS ON A DEMOLITION OR LAND DISTURBANCE PERMIT. THIS PLAN MUST INCLUDE MEASURES FOR SOIL REMEDIATION AND COMPACTION REDUCTION AND BE IN ADDITION TO ANY ITEMS MENTIONED ABOVE IN THE NOTES. THIS PLAN IS IN ADDITION TO BUT CAN BE IN CONJUNCTION WITH ANY TREE CARE THAT IS REQUIRED FOR ANY SITE DEVELOPMENT PLANS.

ARBORIST CHECKLIST NOTES

1. IF THERE ARE INCONSISTENCIES BETWEEN ANY ITEMS ON THESE PLANS THE MORE STRICT INTERPRETATION OF THOSE REQUIREMENTS SHALL BE FOLLOWED. PLEASE CONTACT THE CITY ARBORIST FOR ANY INTERPRETATION.
2. PRIOR TO INITIAL SITE OPENING AND INSPECTION CITY ARBORIST WILL BE PROVIDED WITH RECEIPTS AND OR EXECUTED CONTRACTS SHOWING THE REQUIRED TREE CARE PLAN HAS BEEN PRE–PAID TO A REPUTABLE TREE CARE COMPANY.
3. TREE SAVE FENCE AND SIGNAGE FOR ENTIRE SITE MUST BE INSTALLED, INSPECTED AND APPROVED PRIOR TO INSTALLATION OF EROSION CONTROL MEASURES. NO LAND DISTURBANCE OR DEMOLITION IS ALLOWED BEFORE THIS INSPECTION AND APPROVAL HAS OCCURRED.
4. THE CRZ OF SPECIMEN TREES PLUS ALL BUFFERS SHALL BE PROTECTED WITH WIRE–BACK TREE SAVE FENCING WITH METAL SUPPORT POSTS OR CHAIN LINK AND TREE SAVE SIGNAGE.
5. INSTALLATION OF THE TREE SAVE FENCE WILL INVOLVE NO TRENCHING.
6. ALL EXISTING TREES IDENTIFIED FOR PRESERVATION OR FOUND WITHIN TREE SAVE AREAS MUST BE FULLY PROTECTED DURING ALL PHASES OF THIS PROJECT.
7. ADDITIONAL TREES ALONG THE LIMITS OF DISTURBANCE WITH ENCROACHMENT INTO THE SRP AND DEEMED STRUCTURALLY UNSAFE BY THE CITY ARBORIST OR THE PROJECT ARBORIST MAY BE REQUIRED TO BE REMOVED PRIOR TO CO.
8. ALL ROOTS ENCOUNTERED 1/2" OR GREATER DURING GRADING OR EXCAVATING OPERATIONS SHALL BE CLEAN CUT UNDER THE DIRECTION OF AN ISA CERTIFIED ARBORIST.
9. ANY LIMBS OVERHANGING THE LOD THAT MAY BE RIPPED, TORN, OR DAMAGED DURING CONSTRUCTION SHALL BE PROPERLY PRUNED UNDER THE DIRECTION OF AN ISA CERTIFIED ARBORIST.
10. IT IS THE OWNER'S RESPONSIBILITY TO MAINTAIN THE VEGETATION AND REMOVE TRASH AND DEBRIS AROUND THE PERIMETER OF THE PROJECT, EVEN IF WITHIN THE PUBLIC ROW, IN ACCORDANCE WITH THE CITY OF ALPHARETTA PROPERTY MAINTENANCE CODES.
11. ALL APPROVED REVISIONS TO THE LOCATION OF THE TREE SAVE FENCE NEED TO BE COORDINATED WITH THE LAND DISTURBANCE INSPECTOR PRIOR TO RELOCATION.

LEGEND

ABBREVIATIONS

APPROX	= APPROXIMATE	HP = HIGH POINT
BC	= BACK OF CURB	INV = INVERT
BFE	= BOTTOM FLOOR ELEVATION	IE = INVERT ELEVATION
BM	= BENCHMARK	IPF = IRON PIN FOUND
BW	= BOTTOM OF WALL	IPS = IRON PIN SET – 1/2" REBAR
BLDG	= BUILDING	ICV = IRRIGATION CONTROL VALVE
B/L	= BUILDING LINE	JB = JUNCTION BOX
CB	= CATCH BASIN	LLL = LAND LOT LINE
C/L	= CENTERLINE	LP = LIGHT POLE
CO	= CLEANOUT	LOWP = LOW POINT
CONC	= CONCRETE	MH = MANHOLE
CMF	= CONCRETE MONUMENT FOUND	MSL = MEAN SEA LEVEL
CMP	= CORRUGATED METAL PIPE	OTP = OPEN TOP PIPE
CSP	= CORRUGATED STEEL PIPE	OCS = OUTLET CONTROL STRUCTURE
CF	= CUBIC FEET	PVMT = PAVEMENT
C&G	= CURB & GUTTER	PED = PEDESTAL
CTF	= CRAMP TOP FOUND	PKF = PK NAIL FOUND
DIA	= DIAMETER	PCP = POLYVINYL CHLORIDE PIPE
DE	= DRAINAGE EASEMENT	POB = POINT OF BEGINNING
DI	= DROP INLET	PWR = POWER
DIP	= DUCTILE IRON PIPE	PP = POWER POLE
DWCB	= DOUBLE WING CATCH BASIN	PTP = POWER/TELEPHONE POLE
EP	= EDGE OF PAVEMENT	P/L = PROPERTY LINE
ELEV	= ELEVATION	PROP = PROPOSED
EX	= EXISTING	RB = REBAR
FC	= FACE OF CURB	RCP = REINFORCED CONCRETE PIPE
FT	= FEET	R/W = RIGHT–OF–WAY
FFE	= FINISHED FLOOR ELEVATION	SSE = SANITARY SEWER EASEMENT
FH	= FIRE HYDRANT	SSMH = SANITARY SEWER MANHOLE
FES	= FLARED END SECTION	SWCB = SINGLE WING CATCH BASIN
FM	= FORCE MAIN	S/W = SIDEWALK
GPMH	= GEORGIA POWER MANHOLE	SF = SQUARE FEET
GI	= GRATE INLET	TEL = TELEPHONE
GR	= GROUND	TB = TOP OF BANK
GW	= GUY WIRE	TC = TOP OF CURB
HW	= HEADWALL	TPOB = TRUE POINT OF BEGINNING
HDPE	= HIGH DENSITY POLYETHYLENE	TW = TOP OF WALL
		TRANS = TRANSFORMER
		UG = UNDERGROUND

UGTM	= UG TELEPHONE MARKER
WM	= WATER METER
WV	= WATER VALVE
YI	= YARD INLET

LINETYPES

BRANCH/CREEK
FENCE
GAS LINE
LAND LOT LINE
PLUGGED PIPE/STUB
POWER LINE
SANITARY SEWER LINE
STORM DRAINAGE LINE
TELEPHONE LINE
TRAVERSE LINE/POINT
WATER LINE

SYMBOLS

PROPERTY CORNER
SIGN
SSMH
STUB
HYDRANT
WATER METER
WATER VALVE
LIGHT POST
UTILITY POLE

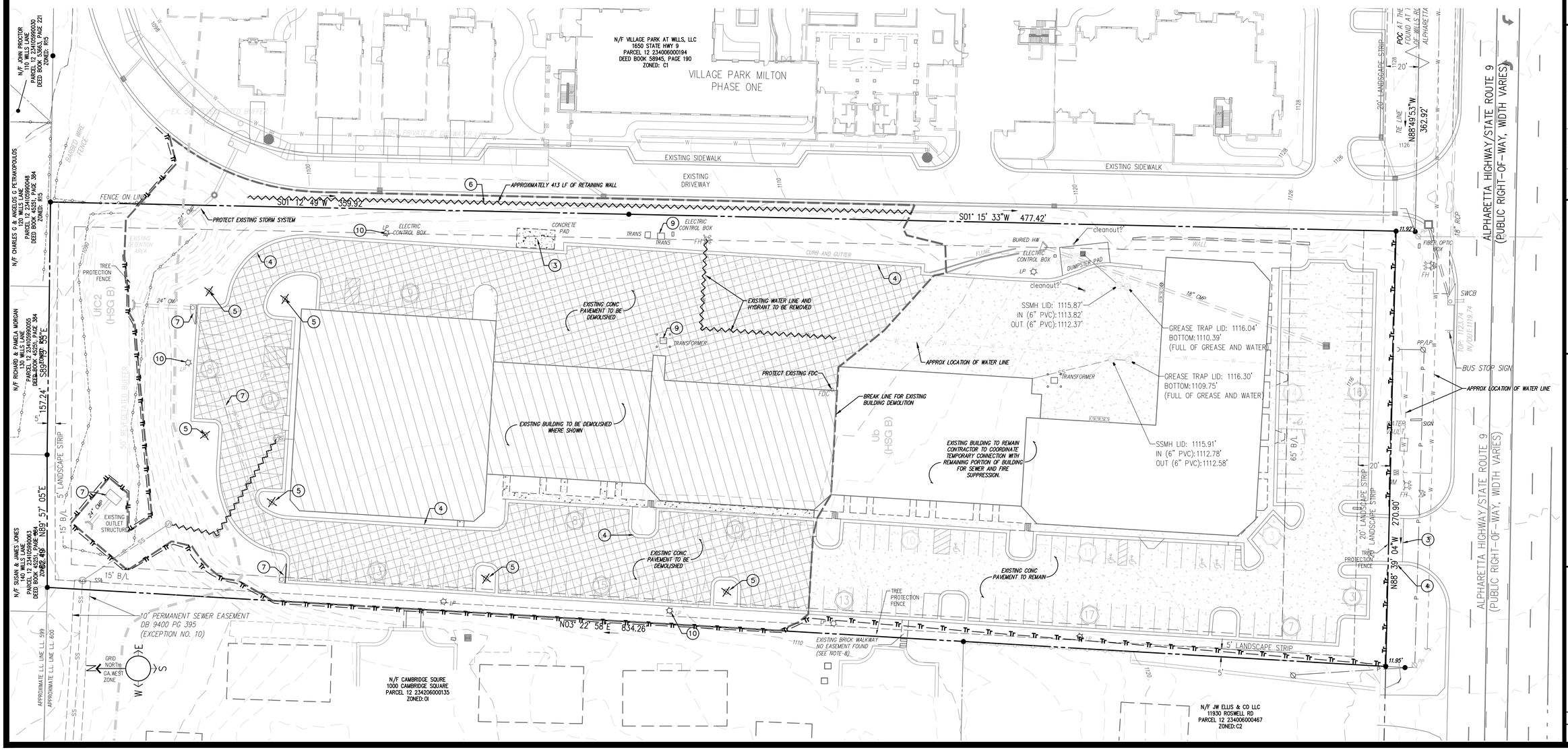

BLUE LANDWORKS
CONSULTING ENGINEERS & SURVEYORS
LICENSE # PEF005518
LICENSE # LSF001044
5019 WEST BROAD STREET
SUITE M230
SUGAR HILL, GEORGIA 30518
TELEPHONE: (678) 804–8586
INFO@BLUELANDWORKS.COM
WWW.BLUELANDWORKS.COM

PREPARED FOR:
VILLAGE PARK SENIOR LIVING, LLC
1745 PEACHTREE RD SUITE 1750
ATLANTA, GA 30326
PHONE: 678 677–6800
CONTACT: BRYAN SPIERLING
EMAIL: bryan@spierlelving.com

GEORGIA REGISTERED No. 27067 PROFESSIONAL ENGINEER JONATHAN H. NIESOL

ISSUE #	DATE	REVISIONS
1	10/12/2021	SUBMIT FOR REVIEW

SCALE: 1" = 30'
0 30 60 90 feet
scale

VILLAGE PARK MILTON
PHASE TWO
11940 ALPHARETTA HIGHWAY

PARCEL(S) 12–2340600566
CITY OF ALPHARETTA
LAND LOT 600, 1ST DISTRICT
FULTON COUNTY, GA
DRAWN: CC
CHECKED: JN

DEMOLITION PLAN

PROJECT# 2019.099

C–001

X:\2019–099 – 11940 Alpharetta Hwy\1000 – AutoCAD\30 – Construction\2019.099 VP Milton_SITE.dwg, C–001 10/12/2021 8:55 AM by Grant Crowe

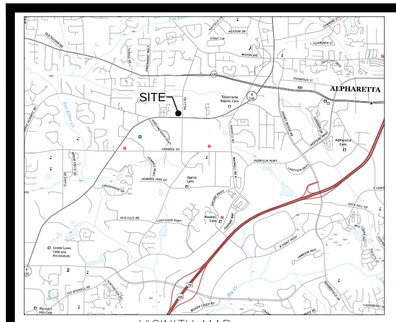

VICINITY MAP
SCALE: NTS
SOURCE: USGS

GENERAL NOTES

1. OWNER/DEVELOPER: **VILLAGE PARK SENIOR LIVING, LLC**
   3424 PEACHTREE RD SUITE 1780
   ATLANTA, GA 30326
   TEL: 678 677-8900
   CONTACT: BRYAN HENDERSON – bryan@galerieliving.com
2. ENGINEER: **BLUE LANDWORKS LLC**
   5019 WEST BROAD STREET
   SUITE M230
   SUGAR HILL, GEORGIA 30518
   TEL: 678-804-8586
   CONTACT: JOHN NICOL, PE
   GA PE #28657
   GA SSWCC LEVEL II CERTIFIED DESIGN PROFESSIONAL #14361
3. THIS PROPERTY IS SHOWN ON FULTON COUNTY TAX MAPS AS BEING PART OF THE 1ST LAND DISTRICT, LAND LOT 60, PARCEL ID(S) 12-2340060005 66 AND CONTAINING 4.90 ACRES.
4. THIS PROPERTY IS ZONED O-I (OFFICE INSTITUTIONAL).
5. PROPOSED USE: ASSISTED LIVING
   TOTAL AREA = 4.90 ACRES
   NUMBER OF COTTAGE UNITS = 17
   INTERIOR SETBACKS:
   MINIMUM FRONT SETBACK: 65 FEET
   MINIMUM SIDE SETBACK: 15 FEET
   MINIMUM REAR SETBACK: 15 FEET
6. THERE IS NO FLOODPLAIN ON THIS PROPERTY PER FEMA NFIP FIRM PANEL NO. 13121C0054F, DATED 9/18/13.
7. THIS SITE DOES NOT CONTAIN AREAS, STREAMS, AND/OR BODIES OF WATER DEPICTED AS WETLANDS ON THE U.S. DEPARTMENT OF INTERIOR, FISH, AND WILDLIFE SERVICE NATIONAL WETLANDS INVENTORY.
8. SOURCE OF TOPOGRAPHY IS FULTON COUNTY GIS. CONTOUR INTERVAL IS 2 FEET. REFERENCE DATUM IS NAVD 88.
9. WATER DISTRIBUTION AND SANITARY SEWER SERVICE TO BE PROVIDED BY FULTON COUNTY.
10. THIS SITE DOES NOT CONTAIN STATE WATERS REQUIRING AN UNDISTURBED 25' STATE WATERS BUFFER.
11. "SURVEY FOR 11940 ALPHARETTA HIGHWAY FOR VILLAGE PARK SENIOR LIVING, LLC" BY BLUE LANDWORKS, LLC DATED DECEMBER 30, 2019.
12. NO WELLS OR SEPTIC SYSTEMS ARE PROPOSED OR EXIST ON SITE

LEGEND

ABBREVIATIONS

APPROX	= APPROXIMATE	HP	= HIGH POINT	UGTM	= UG TELEPHONE MARKER
BC	= BACK OF CURB	INV	= INVERT	WM	= WATER METER
BFE	= BOTTOM FLOOR ELEVATION	IE	= INVERT ELEVATION	WV	= WATER VALVE
BM	= BENCHMARK	IPF	= IRON PIN FOUND	YI	= YARD INLET
BW	= BOTTOM OF WALL	IPS	= IRON PIN SET – 1/2" REBAR		
BLDG	= BUILDING	ICV	= IRRIGATION CONTROL VALVE		
B/L	= BUILDING LINE	JB	= JUNCTION BOX		
CB	= CATCH BASIN	LLL	= LAND LOT LINE		
C/L	= CENTERLINE	LP	= LIGHT POLE		
CO	= CLEANOUT	LOWP	= LOW POINT		
CONC	= CONCRETE	MH	= MANHOLE		
CMF	= CONCRETE MONUMENT FOUND	MSL	= MEAN SEA LEVEL		
CMP	= CORRUGATED METAL PIPE	OTP	= OPEN TOP PIPE		
CSP	= CORRUGATED STEEL PIPE	OCS	= OUTLET CONTROL STRUCTURE		
CF	= CUBIC FEET	PVMT	= PAVEMENT		
C&G	= CURB & GUTTER	PED	= PEDESTAL		
CTF	= CRIMP TOP FOUND	PKF	= PK NAIL FOUND		
DIA	= DIAMETER	PCP	= POLYVINYL CHLORIDE PIPE		
DE	= DRAINAGE EASEMENT	POB	= POINT OF BEGINNING		
DI	= DROP INLET	PWR	= POWER		
DIP	= DUCTILE IRON PIPE	PP	= POWER POLE		
DWCB	= DOUBLE WING CATCH BASIN	PTP	= POWER/TELEPHONE POLE		
EP	= EDGE OF PAVEMENT	P/L	= PROPERTY LINE		
ELEV	= ELEVATION	PROP	= PROPOSED		
EX	= EXISTING	RB	= REBAR		
FC	= FACE OF CURB	RCP	= REINFORCED CONCRETE PIPE		
FT	= FEET	R/W	= RIGHT-OF-WAY		
FFE	= FINISHED FLOOR ELEVATION	SSE	= SANITARY SEWER EASEMENT		
FH	= FIRE HYDRANT	SSMH	= SANITARY SEWER MANHOLE		
FES	= FLARED END SECTION	SWCB	= SINGLE WING CATCH BASIN		
FM	= FORCE MAIN	S/W	= SIDEWALK		
GPMH	= GEORGIA POWER MANHOLE	SF	= SQUARE FEET		
GI	= GRATE INLET	TEL	= TELEPHONE		
GR	= GROUND	TB	= TOP OF BANK		
GW	= GUY WIRE	TC	= TOP OF CURB		
HW	= HEADWALL	TPOB	= TRUE POINT OF BEGINNING		
HDPE	= HIGH DENSITY POLYETHYLENE	TW	= TOP OF WALL		
		TRANS	= TRANSFORMER		
		UG	= UNDERGROUND		

LINETYPES

BRANCH/CREEK
FENCE
GAS LINE
LAND LOT LINE
PLUGGED PIPE/STUB
POWER LINE
SANITARY SEWER LINE
STORM DRAINAGE LINE
TELEPHONE LINE
TRAVERSE LINE/POINT
WATER LINE

SYMBOLS

PROPERTY CORNER
SIGN
SSMH
STUB
HYDRANT
WATER METER
WATER VALVE
LIGHT POST
UTILITY POLE

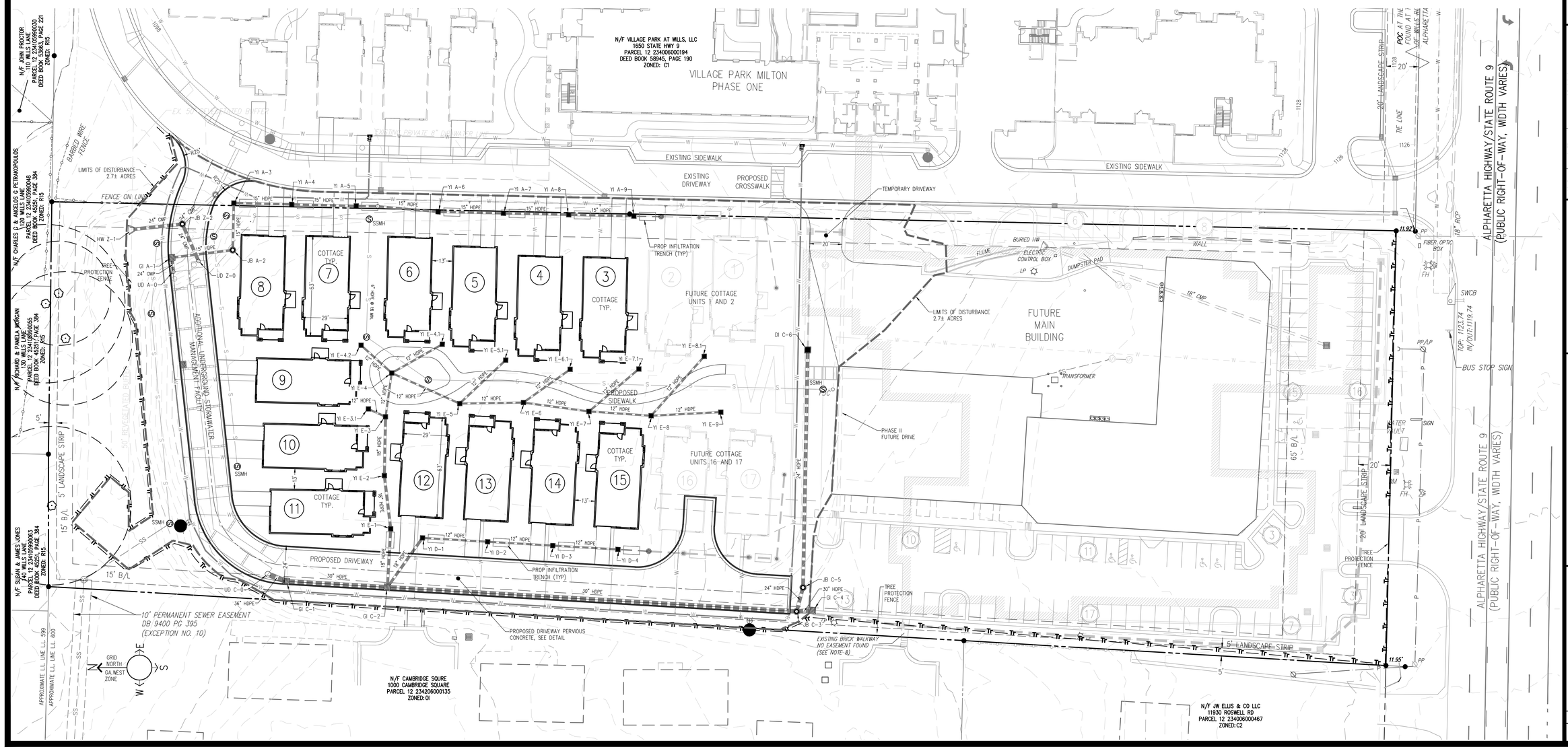

BLUE LANDWORKS
CONSULTING ENGINEERS & SURVEYORS
LICENSE # PEF005518
LICENSE # LSF001044
5019 WEST BROAD STREET
SUITE M230
SUGAR HILL, GEORGIA 30518
TELEPHONE: (678) 804-8586
INFO@BLUELANDWORKS.COM
WWW.BLUELANDWORKS.COM

PREPARED FOR:
VILLAGE PARK SENIOR LIVING, LLC
3424 PEACHTREE RD SUITE 1780
ATLANTA, GA 30326
PHONE: 678 677-8900
CONTACT: BRYAN HENDERSON
EMAIL: bryan@galerieliving.com

GEORGIA REGISTERED No. 27067 PROFESSIONAL ENGINEER JONATHAN H. NICOL

ISSUE #	DATE	REVISIONS
1	10/12/2021	SUBMIT FOR REVIEW

SCALE: 1" = 30'
0 30 60 90 feet
scale

VILLAGE PARK MILTON
PHASE TWO
11940 ALPHARETTA HIGHWAY

PARCEL(S) 12-2340060066
CITY OF ALPHARETTA
LAND LOT 600, 1ST DISTRICT
FULTON COUNTY, GA
DRAWN: CC
CHECKED: JN

SITE PLAN

PROJECT# 2019.099

C-100

X:\2019-099 - 11940 Alpharetta Hwy\1000 - AutoCAD\30 - Construction\2019.099 VP Milton_SITE.dwg, C-100 10/12/2021 8:55 AM by Grant Crowe

ALL TREES MUST BE PLANTED A MINIMUM OF 5 FEET FROM ANY UTILITY LINE AND OR EASEMENTS, UNLESS APPROVED BY THE CITY ARBORIST OR UTILITY PROVIDER

SANITARY SEWER NOTES

1. ALL WASTEWATER PIPE CONSTRUCTION SHOWN ON THESE PLANS MUST CONFORM TO FULTON COUNTY'S STANDARDS AND SPECIFICATIONS, INCLUDING SANITARY SEWER REGULATIONS LATEST COPY.
2. CONTRACTOR MUST FIELD VERIFY THE LOCATION AND ELEVATION OF ALL KNOWN AND UNKNOWN UNDERGROUND UTILITIES.
3. ALL TEMPORARY AND PERMANENT WASTEWATER EASEMENTS MUST BE DRESSED AND GRASSED TO CONTROL EROSION PRIOR TO ACCEPTANCE. TREES SHALL NOT BE PLANTED IN THE PERMANENT EASEMENT AREA, OR WITHIN 5-FEET OF ANY UTILITY LINES.
4. AS-BUILT DRAWINGS AND MAINTENANCE BOND(S) MUST BE SUBMITTED AND ARE REQUIRED PRIOR TO INSPECTION AND ACCEPTANCE. DIGITAL AS-BUILT WILL BE REQUIRED. NOTE THAT DIGITAL AS-BUILTS WILL BE REQUIRED AT THE COMPLETION OF THE PROJECT. PLEASE SEE: HTTP://WWW.FULTONCOUNTYGA.GOV/IMAGES/STORIES/WR/DEVELOPMENT/CAD_STANDARDS.PDF FOR THE REQUIREMENTS. MAINTENANCE BONDS ARE DUE AT FINAL APPROVAL OF THE AS-BUILTS.
5. NEOPRENE COUPLINGS WITH STAINLESS STEEL BANDS AND SHEAR RINGS ARE REQUIRED FOR JOINING DIFFERENT TYPES OF SANITARY SEWER PIPES.
6. POOLS SHALL NOT DRAIN INTO WASTEWATER PIPE SYSTEMS. POOLS SHALL DRAIN INTO AN APPROVED INDIVIDUAL ONSITE WASTEWATER MANAGEMENT SYSTEM.
7. LOW PRESSURE AIR TESTING REQUIRED FOR ALL WASTEWATER PIPE SYSTEMS. THIS TEST MUST MEET ALL REQUIREMENTS AS OUTLINED IN UNI-B-06 OR CURRENT REVISION. A FULTON COUNTY INSPECTOR MUST BE PRESENT DURING TESTING.
8. ISSUANCE OF THIS PERMIT DOES NOT IN ANY WAY IMPLY THAT WASTEWATER TAPS FOR BUILDING PERMITS WILL BE ISSUED. CONTACT THE DEPARTMENT OF PUBLIC WORKS, WATER RESOURCES DIVISION AT (404) 612-7400 FOR FURTHER INFORMATION.
9. CONTRACTOR SHALL FIELD VERIFY THE LOCATIONS AND INVERT ELEVATIONS OF WASTEWATER PIPES FOR A CONNECTION TO EXISTING WASTEWATER SYSTEMS.
10. ANY CHANGES TO THE SEWER DRAWINGS MUST BE APPROVED BY FULTON COUNTY.
11. FOR ALL PROJECTS UTILIZING INDIVIDUAL ONSITE WASTEWATER MANAGEMENT SYSTEMS DESIGN AND PROVISIONS SHALL BE IN CONFORMANCE WITH FULTON COUNTY DEPARTMENT OF HEALTH AND WELLNESS REGULATIONS.
12. USF 7635 BOX REQUIRED FOR WASTEWATER CLEANOUTS IN PAVED AREA PER FULTON COUNTY STANDARD DETAIL 709.
13. COMPACTION OF THE BACK FILL OF ALL TRENCHES SHALL BE COMPACTED TO AT LEAST 90% STANDARD PROCTOR DENSITY. BACKFILL MATERIAL SHALL BE FREE FROM ROOTS, STUMPS, OR OTHER FOREIGN DEBRIS, AND SHALL BE PLACED AT OR NEAR OPTIMUM MOISTURE CONTENT. CORRECTION OF ANY TRENCH SETTLEMENT WITHIN A YEAR FROM THE DATE OF APPROVAL WILL BE THE RESPONSIBILITY OF THE CONTRACTOR. COMPACTION OF THE BACK FILL OF ALL TRENCHES LOCATED UNDER PAVEMENT SHALL BE COMPACTED TO AT LEAST 95% STANDARD PROCTOR DENSITY.
14. SANITARY SEWER LATERALS SHOULD BE MARKED WITH 4"X4"POST WITH MIN. 4-FEET ABOVE GROUND. THE TOP 1' SHOULD BE PAINTED GREEN. EACH LATERAL IS TO BE BROUGHT TO THE GROUND SURFACE IN ACCORDANCE WITH FULTON COUNTY STANDARD 909.
15. ALL REQUIRED OFF SITE EASEMENTS SHALL BE DEDICATED TO FULTON COUNTY PRIOR TO UTILITY PERMITTING. ALL PUBLIC ON- SITE EASEMENTS FOR OTHER THAN SINGLE FAMILY RESIDENTIAL PROJECTS THAT WILL BE FINAL PLATTED SHALL BE DEDICATED TO FULTON COUNTY PRIOR TO WATER RESOURCES PERMIT APPROVAL.
16. FOR ALL PROJECTS CONTAINING PVC WASTEWATER PIPES, ALSO INCLUDE THE FOLLOWING NOTES: (SEE ATTACHED CONDITION FOR PVC).
    a. PIPE SHALL BE ASTM D3034, SDR35 IN 12.5 FOOT LAYING LENGTHS WITH ELASTOMERIC SEALED JOINTS IN ACCORDANCE WITH ASTM D3212.
    b. PIPE BEDDING SHALL BE #57, SHARP, ANGULAR, CRUSHED STONE. BEDDING SHALL EXTEND A MINIMUM OF 4" BELOW THE PIPE AND EXTEND TO THE TOP OF THE PIPE. THE BEDDING SHALL BE COMPACTED BY "SLICING WITH A FLAT SHOVEL". THE WIDTH OF THE DITCH MUST BE IN ACCORDANCE WITH OSHA SAFETY STANDARDS.
    c. INITIAL BACKFILL: AFTER BEDDING, COMPLETE INITIAL BACKFILL WITH #57 STONE. IF NO ROCK IS ENCOUNTERED, INITIAL BACKFILL SHALL EXTEND TO A HEIGHT 6" ABOVE OF THE TOP OF THE PIPE, OTHERWISE INITIAL BACKFILL SHALL EXTEND TO 12" ABOVE THE TOP OF THE PIPE.
    d. FITTINGS FOR LATERAL CONNECTIONS SHALL BE 45° WYES AND BENDS. PROVIDE PVC PIPE STOPPERS FOR EACH LATERAL. PROVIDE SPECIAL WATERTIGHT CONNECTIONS AT MANHOLES AND TRANSITIONS TO DUCTILE IRON PIPE AS RECOMMENDED BY THE PIPE MANUFACTURER.
    e. AFTER INSTALLATION, A DEFLECTION TEST IS REQUIRED. INITIAL DEFLECTION SHALL BE LIMITED TO 3% OF THE UNDEFLECTED DIAMETER. A SECOND TEST SHALL BE MADE AT LEAST 8 MONTHS AFTER THE INSTALLATION BUT BEFORE FINAL ACCEPTANCE. AT THAT TIME DEFLECTION SHALL BE LIMITED TO 5% OF THE UNDEFLECTED DIAMETER.
17. ALL MANHOLES LOCATED WITHIN A PAVED AREA SHALL HAVE CONCENTRIC CONE SECTIONS AND FLANGE DOWN FRAMES AND COVERS. ALL MANHOLES LOCATED WITHIN AN UNPAVED AREA SHALL HAVE ECCENTRIC CONE SECTIONS WITH BOLT DOWN FLANGE UP FRAME AND COVERS, OR HINGED CAST IN PLACE LOCKABLE COVERS. ALL MANHOLES LOCATED WITHIN A FLOOD PRONE AREA SHALL HAVE ECCENTRIC CONE SECTIONS WITH BOLT DOWN GASKETED FLANGE UP FRAME AND COVERS. RAISE TOP OF MANHOLES IN LANDSCAPE AREAS TO 0.5-FEET ABOVE GRADE.
18. NOTIFY FULTON COUNTY INSPECTOR 24-HOURS PRIOR TO CONSTRUCTION.

24-HOUR CONTACT:
BRYAN HENDERSON
404 271-8403

WATER NOTES

1. WATER VALVE MARKERS SHALL BE PLACED AT ALL LOCATIONS WHERE WATER VALVES ARE NOT IN THE STREETS. WATER VALVES THAT ARE IN THE STREET WILL BE CLEARLY MARKED ON THE CURB.
2. ALL TEMPORARY AND PERMANENT WATER EASEMENTS MUST BE DRESSED AND GRASSED TO CONTROL EROSION PRIOR TO ACCEPTANCE. TREES SHALL NOT BE PLANTED IN THE PERMANENT EASEMENT AREA, OR WITHIN 5-FEET OF ANY UTILITY LINES.
3. ALL CONSTRUCTION METHODS AND MATERIALS USED IN THE FULTON COUNTY WATER SYSTEM MUST BE MADE OF DUCTILE IRON, AND COMPLY IN RESPECT TO ANS/AWWAA21.111/C111-85 STANDARD SPECIFICATIONS. PLANS THAT DO NOT MEET THE SPECIFICATIONS IN ALL RESPECTS WILL NOT BE ACCEPTED. (CLASS 50 DIP OR BETTER – CLASS 51 OR 52 IS ALSO ACCEPTABLE).
4. THE CONTRACTOR SHALL INSTALL CAST IRON WATER METER BOXES AND 1" TYPE "K" COPPER SERVICE LINES FOR ALL SERVICES INCLUDING CUL-DE-SACS.
5. LOT LINES WILL BE CLEARLY IDENTIFIED AND MARKED ON TOP OF CURBS BEFORE THE WATER MAIN IS INSTALLED.
6. CONDUIT ACROSS THE ROAD, FOR INSTALLATION OF WATER SERVICES, IS TO BE INSTALLED BY THE DEVELOPER PRIOR TO PAVING. MATERIAL FOR CONDUIT SHALL BE PVC PIPE OR APPROVED ALTERNATE AND IS TO BE INSTALLED 3-FEET BELOW FINAL GRADE.
7. A 6" P.V.C. CONDUIT WILL BE USED TO ACCESS ALL LOTS ON OPPOSITE SIDES OF THE STREET, EXCEPT IN CUL-DE-SACS. INSPECTOR MUST BE NOTIFIED 24 HOURS BEFORE CONSTRUCTION BEGINS.
8. THRUST BLOCKING WILL BE USED AT ALL BENDS, PLUGS, TEES, AND FIRE HYDRANTS.
9. FIRE HYDRANTS SHOWN IN THE RADIUS OF A CURVE SHALL BE FIELD ADJUSTED SO THAT THE ACTUAL INSTALLATION OF FIRE HYDRANTS WILL BE OUTSIDE OF CURVE RADIUS.
10. ANY CHANGES TO THE WATER DRAWINGS MUST BE APPROVED BY FULTON COUNTY.
11. ALL LINES 6" DIAMETER OR GREATER MUST BE PRESSURE TESTED AT 250 PSI FOR A MINIMUM OF TWO (2) HOURS.
12. WATER TAPS, SERVICE LINES, AND METER BOXES WILL BE INSTALLED BY THE DEVELOPER PER CURRENT FULTON COUNTY SPECIFICATIONS.
13. WHEN CONNECTING TO A 10" WATER MAIN OR GREATER AND THE PROPOSED WATER LINE IS 600' LONG, A 10" WATER LINE SHALL BE INSTALLED OR SHALL HAVE A LOOP SYSTEM.
14. NOTIFY FULTON COUNTY INSPECTOR 24-HOURS PRIOR TO CONSTRUCTION.

FIRE MARSHAL NOTES:

1. LOCATE FIRE DEPARTMENT SPRINKLER CONNECTION IN ACCESSIBLE LOCATION WITHIN 100 FEET OF A FIRE HYDRANT.
2. IN ACCORDANCE WITH THE 2006 INTERNATIONAL FIRE CODE, SECTION 503.6 SECURITY GATES, THE CITY OF ALPHARETTA FIRE AND EMERGENCY SERVICES, FIRE MARSHAL'S OFFICE HAS ADOPTED THE FOLLOWING REQUIREMENTS.
    1. ELECTRIC GATE MUST HAVE THE FOLLOWING EQUIPMENT:
        A. KNOX KEY SWITCH ENTRY SYSTEM
        B. SIREN OPENING SYSTEM, ALSO
        C. GATE CODE FOR KEY PAD. CODE CAN BE THE CHOICE OF PROPERTY OWNER.
    2. MANUALLY OPERATED GATES:
        A. KNOW PAD LOCK
3. THE FUEL TANK MUST BE APPROVED BY THE STATE FIRE MARSHALS OFFICE ALONG WITH THE CITY OF ALPHARETTA FIRE MARSHALS OFFICE. STATE FIRE MARSHAL PHONE NUMBER 404-656-9798.
4. KNOX BOX AND PIN PAD TO BE LOCATED AT THE SECURITY BOOTH. KNOX BOX IS TO CONTAIN A ONE TIME USE CODE FOR THE PIN PAD. ONCE ENTERED, ALL VEHICLE SECURITY DEVICES WILL DEACTIVATE.
5. A GEORGIA CERTIFICATE OF COMPETENCY HOLDER FOR AUTOMATIC FIRE SPRINKLER SYSTEMS WILL BE RESPONSIBLE FOR THE DESIGN AND INSTALLATION OF THE UNDERGROUND SUPPLY PIPING.
6. INSTALLATION OR REPAIR OF UNDERGROUND FIRE SPRINKLER WATER SUPPLIES SHALL BE PERFORMED BY AN UTILITY OR FIRE SPRINKLER CONTRACTOR OR PLUMBING CONTRACTOR LICENSED UNDER CHAPTER 11 TITLE 25 SECTION 25-11-7.
7. FIRE DEPARTMENT CONNECTIONS, IF INSTALLED UNDERGROUND SHALL HAVE A LISTED CHECK VALVE, AN AUTODRIP VALVE, A SIGN ON A PLATE OR FITTING READING, "AUTO-SPRINKLER/STANDPIPES," AND HOSE CONNECTIONS SHALL HAVE STANDARD THREADS AS SPECIFIED IN NFPA 1963.
8. FIRE HYDRANTS AND WATER MAINS ARE TO BE INSTALLED, FLUSHED AND UNDER PRESSURE BEFORE ANY COMBUSTIBLE CONSTRUCTION IS STARTED.
9. DURING CONSTRUCTION AND FOR PERMANENT ACCESS, ROADWAYS CONSTRUCTED OF AN ALL-WEATHER SURFACE CAPABLE OF SUPPORTING 75,000 POUNDS GROSS WEIGHT SHALL BE PROVIDED PER INTERNATIONAL FIRE CODE, CHAPTER 5, SECTION 503.2.3, 2006 EDITION.

ADDITIONAL FULTON COUNTY NOTES

a. NO TREES SHALL BE PLANTED IN UTILITY EASEMENTS OR WITHIN 5-FEET OF ANY UTILITIES LINES.

b. CONTRACTOR IS TO CUT AND REMOVE THE PIPE ONLY UPON FINAL APPROVAL BY THE FULTON COUNTY INSPECTOR.

c. ALL WASTEWATER LINES AND LATERALS WITH LESS THAN ONE-FOOT OF CLEARANCE TO ANOTHER UTILITY LINE SHALL BE CONSTRUCTED WITH A CONCRETE SADDLE TO MAINTAIN SEPARATION.

LEGEND

ABBREVIATIONS

APPROX	=	APPROXIMATE
BC	=	BACK OF CURB
BFE	=	BOTTOM FLOOR ELEVATION
BM	=	BENCHMARK
BW	=	BOTTOM OF WALL
BLDG	=	BUILDING
B/L	=	BUILDING LINE
CB	=	CATCH BASIN
C/L	=	CENTERLINE
CO	=	CLEANOUT
CONC	=	CONCRETE
CMF	=	CONCRETE MONUMENT FOUND
CMP	=	CORRUGATED METAL PIPE
CSP	=	CORRUGATED STEEL PIPE
CF	=	CUBIC FEET
C&G	=	CURB & GUTTER
CTF	=	CRIMP TOP FOUND
DIA	=	DIAMETER
DE	=	DRAINAGE EASEMENT
DI	=	DROP INLET
DIP	=	DUCTILE IRON PIPE
DWCB	=	DOUBLE WING CATCH BASIN
EP	=	EDGE OF PAVEMENT
ELEV	=	ELEVATION
EX	=	EXISTING
FC	=	FACE OF CURB
FT	=	FEET
FFE	=	FINISHED FLOOR ELEVATION
FH	=	FIRE HYDRANT
FES	=	FLARED END SECTION
FM	=	FORCE MAIN
GPMH	=	GEORGIA POWER MANHOLE
GI	=	GRATE INLET
GR	=	GROUND
GW	=	GUY WIRE
HW	=	HEADWALL
HDPE	=	HIGH DENSITY POLYETHYLENE
HP	=	HIGH POINT
INV	=	INVERT
IE	=	INVERT ELEVATION
IPF	=	IRON PIN FOUND
IPS	=	IRON PIN SET – 1/2" REBAR
ICV	=	IRRIGATION CONTROL VALVE
JB	=	JUNCTION BOX
LLL	=	LAND LOT LINE
LP	=	LIGHT POLE
LOWP	=	LOW POINT
MH	=	MANHOLE
MSL	=	MEAN SEA LEVEL
OTP	=	OPEN TOP PIPE
OCS	=	OUTLET CONTROL STRUCTURE
PVMT	=	PAVEMENT
PED	=	PEDESTAL
PKF	=	PK NAIL FOUND
PCP	=	POLYVINYL CHLORIDE PIPE
POB	=	POINT OF BEGINNING
PWR	=	POWER
PP	=	POWER POLE
PTP	=	POWER/TELEPHONE POLE
P/L	=	PROPERTY LINE
PROP	=	PROPOSED
RB	=	REBAR
RCP	=	REINFORCED CONCRETE PIPE
R/W	=	RIGHT-OF-WAY
SSE	=	SANITARY SEWER EASEMENT
SSMH	=	SANITARY SEWER MANHOLE
SWCB	=	SINGLE WING CATCH BASIN
S/W	=	SIDEWALK
SF	=	SQUARE FEET
TEL	=	TELEPHONE
TB	=	TOP OF BANK
TC	=	TOP OF CURB
TPOB	=	TRUE POINT OF BEGINNING
TW	=	TOP OF WALL
TRANS	=	TRANSFORMER
UG	=	UNDERGROUND
UGTM	=	UG TELEPHONE MARKER
WM	=	WATER METER
WV	=	WATER VALVE
YI	=	YARD INLET

LINETYPES

- BRANCH/CREEK
- FENCE
- GAS LINE
- LAND LOT LINE
- PLUGGED PIPE/STUB
- POWER LINE
- SANITARY SEWER LINE
- STORM DRAINAGE LINE
- TELEPHONE LINE
- TRAVERSE LINE/POINT
- WATER LINE

SYMBOLS

- PROPERTY CORNER
- SIGN
- SSMH
- STUB
- HYDRANT
- WATER METER
- WATER VALVE
- LIGHT POST
- UTILITY POLE

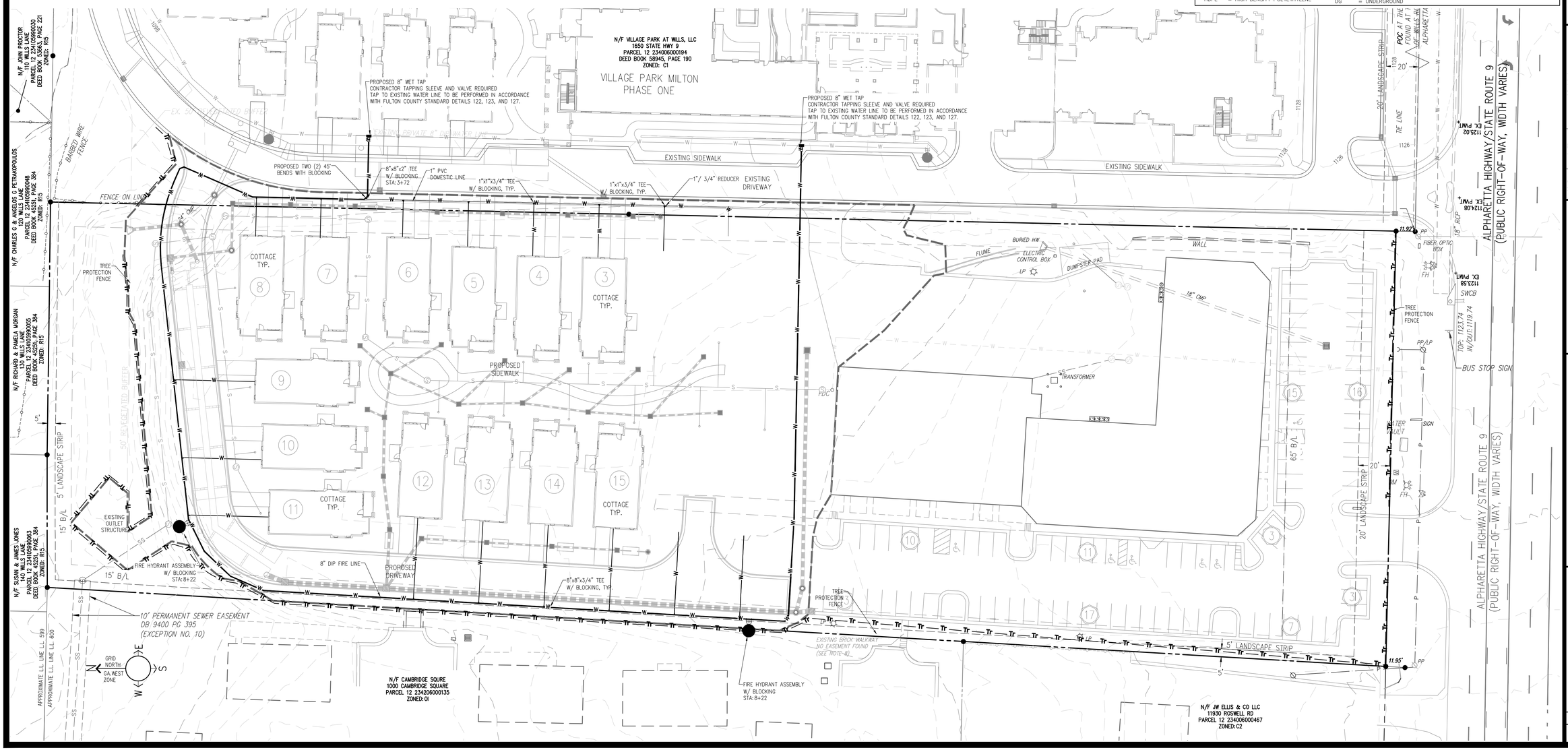

BLUE LANDWORKS
CONSULTING ENGINEERS & SURVEYORS
LICENSE # PEF005518
LICENSE # LSF001044
5019 WEST BROAD STREET
SUITE M230
SUGAR HILL, GEORGIA 30518
TELEPHONE: (678) 804-8586
INFO@BLUELANDWORKS.COM
WWW.BLUELANDWORKS.COM

PREPARED FOR:
VILLAGE PARK SENIOR LIVING, LLC
3340 PEACHTREE RD NE SUITE 1700
ATLANTA, GA 30326
PHONE: 678 677-8600
CONTACT: BRYAN HENDERSON
EMAIL: bryan@paterlivingcom

GEORGIA REGISTERED No. 27067 PROFESSIONAL ENGINEER JONATHAN H. NICHOLL

ISSUE #	DATE	REVISIONS
1	10/12/2021	SUBMIT FOR REVIEW

VILLAGE PARK MILTON
PHASE TWO
11940 ALPHARETTA HIGHWAY

PARCEL(S) 12-2340600056
CITY OF ALPHARETTA
FULTON COUNTY, GA
LAND LOT 600, 1ST DISTRICT
DRAWN: GC
CHECKED: JN

WATER DISTRIBUTION PLAN

PROJECT# 2019.099

C-110

V:\2019-099 - 11940 Alpharetta Hwy\000 - AutoCAD\30 - Construction\2019.099 VP Milton_SITE.dwg, C-110 10/12/2021 8:56 AM by Grant Crowe

ALL TREES MUST BE PLANTED A MINIMUM OF 5 FEET FROM ANY UTILITY LINE AND OR EASEMENTS, UNLESS APPROVED BY THE CITY ARBORIST OR UTILITY PROVIDER

24-HOUR CONTACT:
BRYAN HENDERSON
404 271-8403

SANITARY SEWER NOTES

1. ALL WASTEWATER PIPE CONSTRUCTION SHOWN ON THESE PLANS MUST CONFORM TO FULTON COUNTY'S STANDARDS AND SPECIFICATIONS, INCLUDING SANITARY SEWER REGULATIONS LATEST COPY.
2. CONTRACTOR MUST FIELD VERIFY THE LOCATION AND ELEVATION OF ALL KNOWN AND UNKNOWN UNDERGROUND UTILITIES.
3. ALL TEMPORARY AND PERMANENT WASTEWATER EASEMENTS MUST BE DRESSED AND GRASSED TO CONTROL EROSION PRIOR TO ACCEPTANCE. TREES SHALL NOT BE PLANTED IN THE PERMANENT EASEMENT AREA, OR WITHIN 5-FEET OF ANY UTILITY LINES.
4. AS-BUILT DRAWINGS AND MAINTENANCE BOND(S) MUST BE SUBMITTED AND ARE REQUIRED PRIOR TO INSPECTION AND ACCEPTANCE. DIGITAL AS-BUILT WILL BE REQUIRED. NOTE THAT DIGITAL AS-BUILTS WILL BE REQUIRED AT THE COMPLETION OF THE PROJECT. PLEASE SEE: HTTP://WWW.FULTONCOUNTYGA.GOV/IMAGES/STORIES/WR/DEVELOPMENT/CAD_STANDARDS.PDF FOR THE REQUIREMENTS. MAINTENANCE BONDS ARE DUE AT FINAL APPROVAL OF THE AS-BUILTS.
5. NEOPRENE COUPLINGS WITH STAINLESS STEEL BANDS AND SHEAR RINGS ARE REQUIRED FOR JOINING DIFFERENT TYPES OF SANITARY SEWER PIPES.
6. POOLS SHALL NOT DRAIN INTO WASTEWATER PIPE SYSTEMS. POOLS SHALL DRAIN INTO AN APPROVED INDIVIDUAL ONSITE WASTEWATER MANAGEMENT SYSTEM.
7. LOW PRESSURE AIR TESTING REQUIRED FOR ALL WASTEWATER PIPE SYSTEMS. THIS TEST MUST MEET ALL REQUIREMENTS AS OUTLINED IN UNI-B-06 OR CURRENT REVISION. A FULTON COUNTY INSPECTOR MUST BE PRESENT DURING TESTING.
8. ISSUANCE OF THIS PERMIT DOES NOT IN ANY WAY IMPLY THAT WASTEWATER TAPS FOR BUILDING PERMITS WILL BE ISSUED. CONTACT THE DEPARTMENT OF PUBLIC WORKS, WATER RESOURCES DIVISION AT (404) 612-7400 FOR FURTHER INFORMATION.
9. CONTRACTOR SHALL FIELD VERIFY THE LOCATIONS AND INVERT ELEVATIONS OF WASTEWATER PIPES FOR A CONNECTION TO EXISTING WASTEWATER SYSTEMS.
10. ANY CHANGES TO THE SEWER DRAWINGS MUST BE APPROVED BY FULTON COUNTY.
11. FOR ALL PROJECTS UTILIZING INDIVIDUAL ONSITE WASTEWATER MANAGEMENT SYSTEMS DESIGN AND PROVISIONS SHALL BE IN CONFORMANCE WITH FULTON COUNTY DEPARTMENT OF HEALTH AND WELLNESS REGULATIONS.
12. USF 7635 BOX REQUIRED FOR WASTEWATER CLEANOUTS IN PAVED AREA PER FULTON COUNTY STANDARD DETAIL 709.
13. COMPACTION OF THE BACK FILL OF ALL TRENCHES SHALL BE COMPACTED TO AT LEAST 90% STANDARD PROCTOR DENSITY. BACKFILL MATERIAL SHALL BE FREE FROM ROOTS, STUMPS, OR OTHER FOREIGN DEBRIS, AND SHALL BE PLACED AT OR NEAR OPTIMUM MOISTURE CONTENT. CORRECTION OF ANY TRENCH SETTLEMENT WITHIN A YEAR FROM THE DATE OF APPROVAL WILL BE THE RESPONSIBILITY OF THE CONTRACTOR. COMPACTION OF THE BACK FILL OF ALL TRENCHES LOCATED UNDER PAVEMENT SHALL BE COMPACTED TO AT LEAST 95% STANDARD PROCTOR DENSITY.
14. SANITARY SEWER LATERALS SHOULD BE MARKED WITH 4"X4"POST WITH MIN. 4-FEET ABOVE GROUND. THE TOP 1' SHOULD BE PAINTED GREEN. EACH LATERAL IS TO BE BROUGHT TO THE GROUND SURFACE IN ACCORDANCE WITH FULTON COUNTY STANDARD 909.
15. ALL REQUIRED OFF SITE EASEMENTS SHALL BE DEDICATED TO FULTON COUNTY PRIOR TO UTILITY PERMITTING. ALL PUBLIC ON- SITE EASEMENTS FOR OTHER THAN SINGLE FAMILY RESIDENTIAL PROJECTS THAT WILL BE FINAL PLATTED SHALL BE DEDICATED TO FULTON COUNTY PRIOR TO WATER RESOURCES PERMIT APPROVAL.
16. FOR ALL PROJECTS CONTAINING PVC WASTEWATER PIPES, ALSO INCLUDE THE FOLLOWING NOTES: (SEE ATTACHED CONDITION FOR PVC).
    a. PIPE SHALL BE ASTM D3034, SDR35 IN 12.5 FOOT LAYING LENGTHS WITH ELASTOMERIC SEALED JOINTS IN ACCORDANCE WITH ASTM D3212.
    b. PIPE BEDDING SHALL BE #57, SHARP, ANGULAR, CRUSHED STONE. BEDDING SHALL EXTEND A MINIMUM OF 4" BELOW THE PIPE AND EXTEND TO THE TOP OF THE PIPE. THE BEDDING SHALL BE COMPACTED BY "SLICING WITH A FLAT SHOVEL". THE WIDTH OF THE DITCH MUST BE IN ACCORDANCE WITH OSHA SAFETY STANDARDS.
    c. INITIAL BACKFILL: AFTER BEDDING, COMPLETE INITIAL BACKFILL WITH #57 STONE. IF NO ROCK IS ENCOUNTERED, INITIAL BACKFILL SHALL EXTEND TO A HEIGHT 6" ABOVE OF THE TOP OF THE PIPE, OTHERWISE INITIAL BACKFILL SHALL EXTEND TO 12" ABOVE THE TOP OF THE PIPE.
    d. FITTINGS FOR LATERAL CONNECTIONS SHALL BE 45° WYES AND BENDS. PROVIDE PVC PIPE STOPPERS FOR EACH LATERAL. PROVIDE SPECIAL WATERTIGHT CONNECTIONS AT MANHOLES AND TRANSITIONS TO DUCTILE IRON PIPE AS RECOMMENDED BY THE PIPE MANUFACTURER.
    e. AFTER INSTALLATION, A DEFLECTION TEST IS REQUIRED. INITIAL DEFLECTION SHALL BE LIMITED TO 3% OF THE UNDEFLECTED DIAMETER. A SECOND TEST SHALL BE MADE AT LEAST 8 MONTHS AFTER THE INSTALLATION BUT BEFORE FINAL ACCEPTANCE. AT THAT TIME DEFLECTION SHALL BE LIMITED TO 5% OF THE UNDEFLECTED DIAMETER.
17. ALL MANHOLES LOCATED WITHIN A PAVED AREA SHALL HAVE CONCENTRIC CONE SECTIONS AND FLANGE DOWN FRAMES AND COVERS. ALL MANHOLES LOCATED WITHIN AN UNPAVED AREA SHALL HAVE ECCENTRIC CONE SECTIONS WITH BOLT DOWN FLANGE UP FRAME AND COVERS, OR HINGED CAST IN PLACE LOCKABLE COVERS. ALL MANHOLES LOCATED WITHIN A FLOOD PRONE AREA SHALL HAVE ECCENTRIC CONE SECTIONS WITH BOLT DOWN GASKETED FLANGE UP FRAME AND COVERS. RAISE TOP OF MANHOLES IN LANDSCAPE AREAS TO 0.5-FEET ABOVE GRADE.
18. NOTIFY FULTON COUNTY INSPECTOR 24-HOURS PRIOR TO CONSTRUCTION.

WATER NOTES

1. WATER VALVE MARKERS SHALL BE PLACED AT ALL LOCATIONS WHERE WATER VALVES ARE NOT IN THE STREETS. WATER VALVES THAT ARE IN THE STREET WILL BE CLEARLY MARKED ON THE CURB.
2. ALL TEMPORARY AND PERMANENT WATER EASEMENTS MUST BE DRESSED AND GRASSED TO CONTROL EROSION PRIOR TO ACCEPTANCE. TREES SHALL NOT BE PLANTED IN THE PERMANENT EASEMENT AREA, OR WITHIN 5-FEET OF ANY UTILITY LINES.
3. ALL CONSTRUCTION METHODS AND MATERIALS USED IN THE FULTON COUNTY WATER SYSTEM MUST BE MADE OF DUCTILE IRON, AND COMPLY IN RESPECT TO ANS/AWWAA21.111/C111-85 STANDARD SPECIFICATIONS. PLANS THAT DO NOT MEET THE SPECIFICATIONS IN ALL RESPECTS WILL NOT BE ACCEPTED. (CLASS 50 DIP OR BETTER – CLASS 51 OR 52 IS ALSO ACCEPTABLE).
4. THE CONTRACTOR SHALL INSTALL CAST IRON WATER METER BOXES AND 1" TYPE "K" COPPER SERVICE LINES FOR ALL SERVICES INCLUDING CUL-DE-SACS.
5. LOT LINES WILL BE CLEARLY IDENTIFIED AND MARKED ON TOP OF CURBS BEFORE THE WATER MAIN IS INSTALLED.
6. CONDUIT ACROSS THE ROAD, FOR INSTALLATION OF WATER SERVICES, IS TO BE INSTALLED BY THE DEVELOPER PRIOR TO PAVING. MATERIAL FOR CONDUIT SHALL BE PVC PIPE OR APPROVED ALTERNATE AND IS TO BE INSTALLED 3-FEET BELOW FINAL GRADE.
7. A 6" P.V.C. CONDUIT WILL BE USED TO ACCESS ALL LOTS ON OPPOSITE SIDES OF THE STREET, EXCEPT IN CUL-DE-SACS. INSPECTOR MUST BE NOTIFIED 24 HOURS BEFORE CONSTRUCTION BEGINS.
8. THRUST BLOCKING WILL BE USED AT ALL BENDS, PLUGS, TEES, AND FIRE HYDRANTS.
9. FIRE HYDRANTS SHOWN IN THE RADIUS OF A CURVE SHALL BE FIELD ADJUSTED SO THAT THE ACTUAL INSTALLATION OF FIRE HYDRANTS WILL BE OUTSIDE OF CURVE RADIUS.
10. ANY CHANGES TO THE WATER DRAWINGS MUST BE APPROVED BY FULTON COUNTY.
11. ALL LINES 6" DIAMETER OR GREATER MUST BE PRESSURE TESTED AT 250 PSI FOR A MINIMUM OF TWO (2) HOURS.
12. WATER TAPS, SERVICE LINES, AND METER BOXES WILL BE INSTALLED BY THE DEVELOPER PER CURRENT FULTON COUNTY SPECIFICATIONS.
13. WHEN CONNECTING TO A 10" WATER MAIN OR GREATER AND THE PROPOSED WATER LINE IS 600' LONG, A 10" WATER LINE SHALL BE INSTALLED OR SHALL HAVE A LOOP SYSTEM.
14. NOTIFY FULTON COUNTY INSPECTOR 24-HOURS PRIOR TO CONSTRUCTION.

FIRE MARSHAL NOTES:

1. LOCATE FIRE DEPARTMENT SPRINKLER CONNECTION IN ACCESSIBLE LOCATION WITHIN 100 FEET OF A FIRE HYDRANT.
2. IN ACCORDANCE WITH THE 2006 INTERNATIONAL FIRE CODE, SECTION 503.6 SECURITY GATES, THE CITY OF ALPHARETTA FIRE AND EMERGENCY SERVICES, FIRE MARSHAL'S OFFICE HAS ADOPTED THE FOLLOWING REQUIREMENTS.
    1. ELECTRIC GATE MUST HAVE THE FOLLOWING EQUIPMENT:
        A. KNOX KEY SWITCH ENTRY SYSTEM
        B. SIREN OPERATING SYSTEM – 2QS
        C. GATE CODE FOR KEY PAD. CODE CAN BE THE CHOICE OF PROPERTY OWNER.
    2. MANUALLY OPERATED GATES:
        A. KNOW PAD LOCK
3. THE FUEL TANK MUST BE APPROVED BY THE STATE FIRE MARSHALS OFFICE ALONG WITH THE CITY OF ALPHARETTA FIRE MARSHALS OFFICE. STATE FIRE MARSHAL PHONE NUMBER 404-656-9798.
4. KNOX BOX AND PIN PAD TO BE LOCATED AT THE SECURITY BOOTH. KNOX BOX IS TO CONTAIN A ONE TIME USE CODE FOR THE PIN PAD. ONCE ENTERED, ALL VEHICLE SECURITY DEVICES WILL DEACTIVATE.
5. A GEORGIA CERTIFICATE OF COMPETENCY HOLDER FOR AUTOMATIC FIRE SPRINKLER SYSTEMS WILL BE RESPONSIBLE FOR THE DESIGN AND INSTALLATION OF THE UNDERGROUND SUPPLY PIPING.
6. INSTALLATION OR REPAIR OF UNDERGROUND FIRE SPRINKLER WATER SUPPLIES SHALL BE PERFORMED BY AN UTILITY OR FIRE SPRINKLER CONTRACTOR OR PLUMBING CONTRACTOR LICENSED UNDER CHAPTER 11 TITLE 25 SECTION 25-11-7.
7. FIRE DEPARTMENT CONNECTIONS, IF INSTALLED UNDERGROUND SHALL HAVE A LISTED CHECK VALVE, AN AUTODRIP VALVE, A SIGN ON A PLATE OR FITTING READING, "AUTO-SPRINKLER/STANDPIPES," AND HOSE CONNECTIONS SHALL HAVE STANDARD THREADS AS SPECIFIED IN NFPA 1963.
8. FIRE HYDRANTS AND WATER MAINS ARE TO BE INSTALLED, FLUSHED AND UNDER PRESSURE BEFORE ANY COMBUSTIBLE CONSTRUCTION IS STARTED.
9. DURING CONSTRUCTION AND FOR PERMANENT ACCESS, ROADWAYS CONSTRUCTED OF AN ALL-WEATHER SURFACE CAPABLE OF SUPPORTING 75,000 POUNDS GROSS WEIGHT SHALL BE PROVIDED PER INTERNATIONAL FIRE CODE, CHAPTER 5, SECTION 503.2.3, 2006 EDITION.

ADDITIONAL FULTON COUNTY NOTES

a. NO TREES SHALL BE PLANTED IN UTILITY EASEMENTS OR WITHIN 5-FEET OF ANY UTILITIES LINES.

b. CONTRACTOR IS TO CUT AND REMOVE THE PIPE ONLY UPON FINAL APPROVAL BY THE FULTON COUNTY INSPECTOR.

c. ALL WASTEWATER LINES AND LATERALS WITH LESS THAN ONE-FOOT OF CLEARANCE TO ANOTHER UTILITY LINE SHALL BE CONSTRUCTED WITH A CONCRETE SADDLE TO MAINTAIN SEPARATION.

LEGEND

ABBREVIATIONS

APPROX	=	APPROXIMATE
BC	=	BACK OF CURB
BFE	=	BOTTOM FLOOR ELEVATION
BM	=	BENCHMARK
BW	=	BOTTOM OF WALL
BLDG	=	BUILDING
B/L	=	BUILDING LINE
CB	=	CATCH BASIN
C/L	=	CENTERLINE
CO	=	CLEANOUT
CONC	=	CONCRETE
CMP	=	CONCRETE MONUMENT FOUND
CMP	=	CORRUGATED METAL PIPE
CSP	=	CORRUGATED STEEL PIPE
CF	=	CUBIC FEET
C&G	=	CURB & GUTTER
CTF	=	CRIMP TOP FOUND
DIA	=	DIAMETER
DE	=	DRAINAGE EASEMENT
DI	=	DROP INLET
DIP	=	DUCTILE IRON PIPE
DWCB	=	DOUBLE WING CATCH BASIN
EP	=	EDGE OF PAVEMENT
ELEV	=	ELEVATION
EX	=	EXISTING
FC	=	FACE OF CURB
FT	=	FEET
FFE	=	FINISHED FLOOR ELEVATION
FH	=	FIRE HYDRANT
FES	=	FLARED END SECTION
FM	=	FORCE MAIN
GPMH	=	GEORGIA POWER MANHOLE
GI	=	GRATE INLET
GR	=	GROUND
GW	=	GUY WIRE
HW	=	HEADWALL
HDPE	=	HIGH DENSITY POLYETHYLENE
HP	=	HIGH POINT
INV	=	INVERT
IE	=	INVERT ELEVATION
IPF	=	IRON PIN FOUND
IPS	=	IRON PIN SET – 1/2" REBAR
ICV	=	IRRIGATION CONTROL VALVE
JB	=	JUNCTION BOX
LLL	=	LAND LOT LINE
LP	=	LIGHT POLE
LOWP	=	LOW POINT
MH	=	MANHOLE
MSL	=	MEAN SEA LEVEL
OTP	=	OPEN TOP PIPE
OCS	=	OUTLET CONTROL STRUCTURE
PVMT	=	PAVEMENT
PED	=	PEDESTAL
PKF	=	PK NAIL FOUND
PCP	=	POLYVINYL CHLORIDE PIPE
POB	=	POINT OF BEGINNING
PWR	=	POWER
PP	=	POWER POLE
PTP	=	POWER/TELEPHONE POLE
P/L	=	PROPERTY LINE
PROP	=	PROPOSED
RB	=	REBAR
RCP	=	REINFORCED CONCRETE PIPE
R/W	=	RIGHT-OF-WAY
SSE	=	SANITARY SEWER EASEMENT
SSMH	=	SANITARY SEWER MANHOLE
SWCB	=	SINGLE WING CATCH BASIN
S/W	=	SIDEWALK
SF	=	SQUARE FEET
TEL	=	TELEPHONE
TB	=	TOP OF BANK
TC	=	TOP OF CURB
TPOB	=	TRUE POINT OF BEGINNING
TW	=	TOP OF WALL
TRANS	=	TRANSFORMER
UG	=	UNDERGROUND
UGTM	=	UG TELEPHONE MARKER
WM	=	WATER METER
WV	=	WATER VALVE
YI	=	YARD INLET

LINETYPES

BRANCH/CREEK
FENCE
GAS LINE
LAND LOT LINE
PLUGGED PIPE/STUB
POWER LINE
SANITARY SEWER LINE
STORM DRAINAGE LINE
TELEPHONE LINE
TRAVERSE LINE/POINT
WATER LINE

SYMBOLS

PROPERTY CORNER
SIGN
SSMH
STUB
HYDRANT
WATER METER
WATER VALVE
LIGHT POST
UTILITY POLE

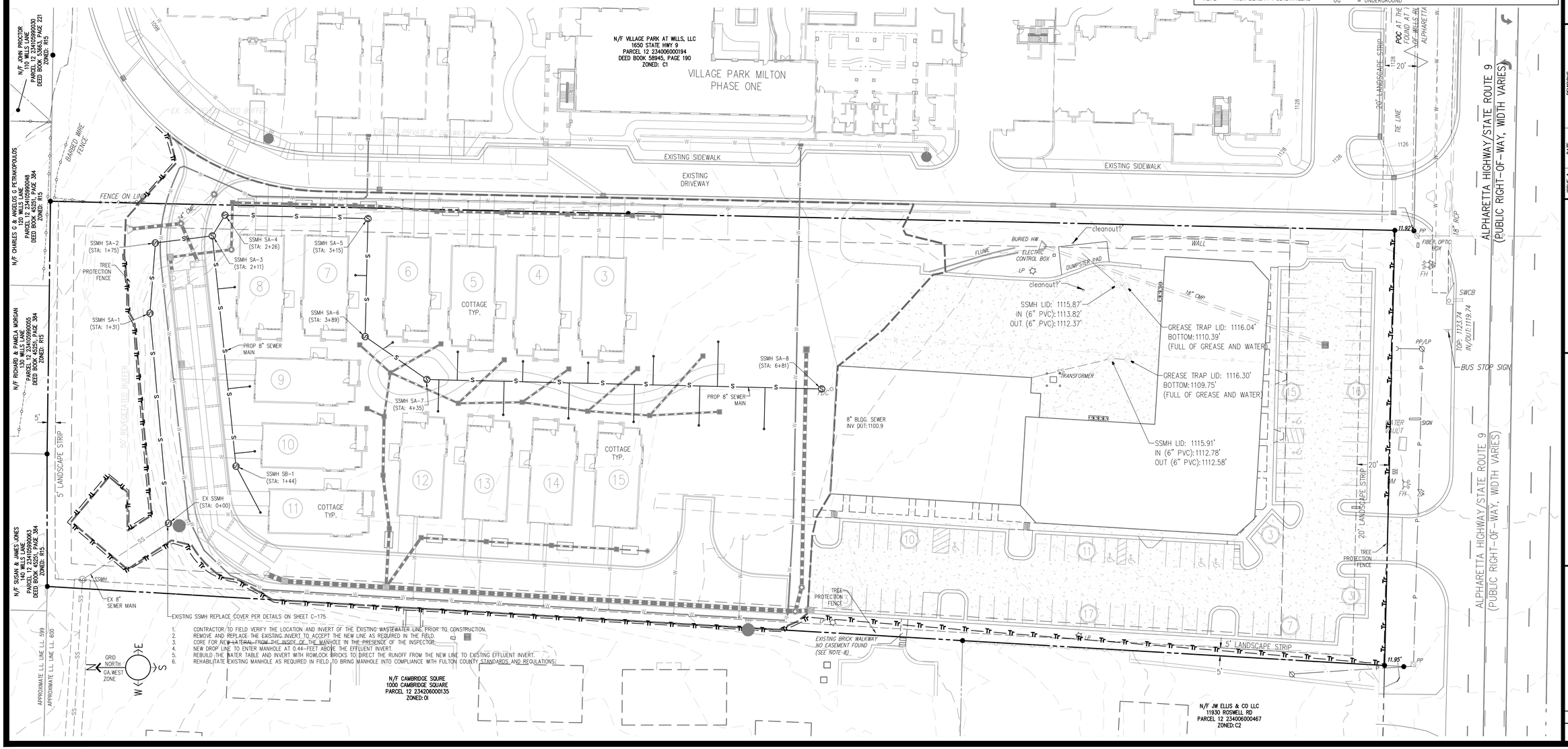

1. CONTRACTOR TO FIELD VERIFY THE LOCATION AND INVERT OF THE EXISTING WASTEWATER LINE PRIOR TO CONSTRUCTION.
2. REMOVE AND REPLACE THE EXISTING INVERT TO ACCEPT THE NEW LINE AS REQUIRED IN THE FIELD.
3. CORE FOR NEW LATERAL FROM THE INSIDE OF THE MANHOLE IN THE PRESENCE OF THE INSPECTOR.
4. NEW DROP LINE TO ENTER MANHOLE AT 0.44-FEET ABOVE THE EFFLUENT INVERT.
5. REBUILD THE WATER TABLE AND INVERT WITH ROWLOCK BRICKS TO DIRECT THE RUNOFF FROM THE NEW LINE TO EXISTING EFFLUENT INVERT.
6. REHABILITATE EXISTING MANHOLE AS REQUIRED IN FIELD TO BRING MANHOLE INTO COMPLIANCE WITH FULTON COUNTY STANDARDS AND REGULATIONS.

BLUE LANDWORKS
CONSULTING ENGINEERS & SURVEYORS
LICENSE # PEF005518
LICENSE # LSF001044
5019 WEST BROAD STREET
SUITE M230
SUGAR HILL, GEORGIA 30518
TELEPHONE: (678) 804-8586
INFO@BLUELANDWORKS.COM
WWW.BLUELANDWORKS.COM

PREPARED FOR:
VILLAGE PARK SENIOR LIVING, LLC
1100 CAMBRIDGE SQUARE SUITE 1700
ATLANTA, GA 30328
678 677-8600
CONTACT: BRYAN HENDERSON
EMAIL: bryan@parkliving.com

GEORGIA REGISTERED PROFESSIONAL ENGINEER No. 27067 JONATHAN H. NIESOL

ISSUE #	DATE	REVISIONS
1	10/12/2021	SUBMIT FOR REVIEW

SCALE: 1" = 30'
0 30 60 90 feet
scale

VILLAGE PARK MILTON
PHASE TWO
11940 ALPHARETTA HIGHWAY

PARCEL(S) 12-2340060000566
CITY OF ALPHARETTA
LAND LOT 600, 1ST DISTRICT
FULTON COUNTY, GA
DRAWN: CC
CHECKED: JN

SANITARY SEWER PLAN

PROJECT# 2019.099

C-120

X:\2019-099 - 11940 Alpharetta Hwy\1000 - AutoCAD\30 - Construction\2019.099 VP Milton_SITE.dwg, C-120 10/12/2021 8:56 AM by Grant Drawe

PIPE	DIA inches	TYPE	ASPHALT COATED (p = paved invert)	Manning's n	DESIGN FREQ year	FREQ. FACTOR Cf	WEIGHTED RATIONAL "C"	INTENSITY in/hr	AREA acres	DESIGN FLOW cfs	DESIGN SLOPE %	FF FRIC SLOPE %	VELOCITY* ft/sec	Time of Concentration min	LENGTH ft
A9-A8	15	HDPE		0.011	25	1.1	0.66	8.28	0.2	1.4	1.11%	0.04%	4.9	5.0	40.60
A8-A7	15	HDPE		0.011	25	1.1	0.66	8.23	0.3	1.9	1.11%	0.06%	5.4	5.1	40.60
A7-A6	15	HDPE		0.011	25	1.1	0.66	8.19	0.4	2.4	1.11%	0.10%	5.7	5.3	40.60
A6-A5	15	HDPE		0.011	25	1.1	0.66	8.15	0.5	2.8	1.07%	0.14%	5.9	5.4	51.20
A5-A4	15	HDPE		0.011	25	1.1	0.66	8.11	0.6	3.4	1.12%	0.20%	6.3	5.5	40.20
A4-A3	15	HDPE		0.011	25	1.1	0.66	8.08	0.6	3.8	1.11%	0.25%	6.4	5.6	36.10
A3-A2	15	HDPE		0.011	25	1.1	0.66	8.06	0.7	4.0	1.02%	0.28%	6.3	5.7	29.30
A2-A1	15	HDPE		0.011	25	1.1	0.66	8.06	0.7	4.0	1.05%	0.28%	6.4	5.8	38.20
A1-A0	24	CMP		0.024	25	1.1	0.66	8.00	0.9	5.1	1.12%	0.18%	3.9	5.9	8.90

PIPE	DIA inches	TYPE	ASPHALT COATED (p = paved invert)	Manning's n	DESIGN FREQ year	FREQ. FACTOR Cf	WEIGHTED RATIONAL "C"	INTENSITY in/hr	AREA acres	DESIGN FLOW cfs	DESIGN SLOPE %	FF FRIC SLOPE %	VELOCITY* ft/sec	Time of Concentration min	LENGTH ft
E9-E8	12	HDPE		0.011	25	1.1	0.66	8.28	0.1	0.4	1.11%	0.01%	3.4	5.0	40.60
E8.1-E8	12	HDPE		0.011	25	1.1	0.66	8.28	0.0	0.2	1.01%	0.00%	2.7	5.0	49.60
E8-E7	12	HDPE		0.011	25	1.1	0.66	8.18	0.1	0.7	1.03%	0.03%	4.0	5.3	38.80
E7.1-E7	12	HDPE		0.011	25	1.1	0.66	8.28	0.0	0.1	1.10%	0.00%	2.4	5.0	40.80
E7-E6	12	HDPE		0.011	25	1.1	0.66	8.13	0.2	0.9	1.09%	0.05%	4.5	5.5	41.20
E6.1-E6	12	HDPE		0.011	25	1.1	0.66	8.28	0.0	0.2	1.12%	0.00%	2.8	5.0	35.70
E6-E5	12	HDPE		0.011	25	1.1	0.66	8.08	0.2	1.3	1.01%	0.10%	4.7	5.6	39.70
E5.1-E5	12	HDPE		0.011	25	1.1	0.66	8.28	0.0	0.1	1.02%	0.00%	2.4	5.0	39.40
E5-E4	12	HDPE		0.011	25	1.1	0.66	8.04	0.3	1.6	1.08%	0.15%	5.2	5.8	46.40
E4.2-E4	12	HDPE		0.011	25	1.1	0.66	8.28	0.1	0.4	1.16%	0.01%	3.4	5.0	25.80
E4.1-E4	12	HDPE		0.011	25	1.1	0.66	8.28	0.1	0.3	1.10%	0.01%	3.2	5.0	36.20
E4-E3	12	HDPE		0.011	25	1.1	0.66	8.00	0.4	2.3	1.09%	0.29%	5.6	5.9	27.60
E3.1-E3	12	HDPE		0.011	25	1.1	0.66	8.28	0.1	0.5	1.28%	0.01%	3.9	5.0	11.70
E3-E2	18	HDPE		0.011	25	1.1	0.66	7.98	0.5	2.7	1.09%	0.05%	5.8	6.0	36.60
E2-E1	18	HDPE		0.011	25	1.1	0.66	9.94	0.6	4.0	1.05%	0.11%	6.4		33.40
E1-C2	18	HDPE		0.011	25	1.1	0.67	9.94	0.6	4.3	1.10%	0.12%	6.6		36.50
D4-D3	12	HDPE		0.011	25	1.1	0.66	8.28	0.2	1.3	1.11%	0.10%	4.9	5.0	40.60
D3-D2	12	HDPE		0.011	25	1.1	0.66	9.94	0.3	2.2	1.11%	0.27%	5.6		40.60
D2-D1	12	HDPE		0.011	25	1.1	0.66	9.94	0.4	2.7	1.11%	0.43%	5.9		40.60
D1-C2	18	HDPE		0.011	25	1.1	0.66	9.94	0.5	3.3	1.06%	0.07%	6.1		37.70
C6-C5	24	HDPE		0.011	25	1.1	0.95	8.28	1.3	10.9	1.01%	0.17%	8.1	5.0	148.10
C5-C3	24	HDPE		0.011	25	1.1	0.95	8.28	1.3	10.9	1.30%	0.17%	8.9	5.3	15.40
C4-C3	30	HDPE		0.011	25	1.1	0.95	8.28	1.2	10.0	1.02%	0.04%	7.8	5.0	9.80
C3-C2	30	HDPE		0.011	25	1.1	0.95	8.17	2.4	20.6	1.02%	0.18%	9.5	5.4	255.30
C2-C1	30	HDPE		0.011	25	1.1	0.85	8.03	3.7	27.9	1.03%	0.34%	10.3	6.2	63.10
C1-C0	36	CMP		0.024	25	1.1	0.85	7.88	3.8	27.9	1.23%	0.60%	6.1	6.4	12.20

DESIGN LANDSCAPE ARCHITECT OR PROJECT ARBORIST WILL INSPECT, VERIFY, AND APPROVE THE LANDSCAPING IS PLANTED PER THE APPROVED PLANS AND CITY STANDARDS PRIOR TO CONTACTING THE CITY ARBORIST FOR A CO INSPECTION.

PIPE MATERIALS: RCP WITHIN PUBLIC ROW, OUTSIDE OF ROW ALL METAL PIPES FULLY BITUMINOUS, ASPHALT OR ALUMINUM COATED WITH PAVED INVERTS.
FOR HDPE PIPE, PROVIDE DETAILS AND INSTALLATION SPECIFICATIONS.
ALL METAL PIPES TO BE FULLY BITUMINOUS, ASPHALT OR ALUMINUM COATED WITH PAVED INVERTS. ROW-LOCK INVERTS REQUIRED ON ALL STORM STRUCTURES IN RIGHT-OF-WAY.

ARBORIST CHECKLIST NOTES

1. IF THERE ARE INCONSISTENCIES BETWEEN ANY ITEMS ON THESE PLANS THE MORE STRICT INTERPRETATION OF THOSE REQUIREMENTS SHALL BE FOLLOWED. PLEASE CONTACT THE CITY ARBORIST FOR ANY INTERPRETATION.
2. PRIOR TO INITIAL SITE OPENING AND INSPECTION CITY ARBORIST WILL BE PROVIDED WITH RECEIPTS AND OR EXECUTED CONTRACTS SHOWING THE REQUIRED TREE CARE PLAN HAS BEEN PRE-PAID TO A REPUTABLE TREE CARE COMPANY.
3. TREE SAVE FENCE AND SIGNAGE FOR ENTIRE SITE MUST BE INSTALLED, INSPECTED AND APPROVED PRIOR TO INSTALLATION OF EROSION CONTROL MEASURES. NO LAND DISTURBANCE OR DEMOLITION IS ALLOWED BEFORE THIS INSPECTION AND APPROVAL HAS OCCURRED.
4. THE CRZ OF SPECIMEN TREES PLUS ALL BUFFERS SHALL BE PROTECTED WITH WIRE-BACK TREE SAVE FENCING WITH METAL SUPPORT POSTS OR CHAIN LINK AND TREE SAVE SIGNAGE.
5. INSTALLATION OF THE TREE SAVE FENCE WILL INVOLVE NO TRENCHING.
6. ALL EXISTING TREES IDENTIFIED FOR PRESERVATION OR FOUND WITHIN TREE SAVE AREAS MUST BE FULLY PROTECTED DURING ALL PHASES OF THIS PROJECT.
7. ADDITIONAL TREES ALONG THE LIMITS OF DISTURBANCE WITH ENCROACHMENT INTO THE SRP AND DEEMED STRUCTURALLY UNSAFE BY THE CITY ARBORIST OR THE PROJECT ARBORIST MAY BE REQUIRED TO BE REMOVED PRIOR TO CO.
8. ALL ROOTS ENCOUNTERED 1/2" OR GREATER DURING GRADING OR EXCAVATING OPERATIONS SHALL BE CLEAN CUT UNDER THE DIRECTION OF AN ISA CERTIFIED ARBORIST.
9. ANY LIMBS OVERHANGING THE LOD THAT MAY BE RIPPED, TORN, OR DAMAGED DURING CONSTRUCTION SHALL BE PROPERLY PRUNED UNDER THE DIRECTION OF AN ISA CERTIFIED ARBORIST.
10. IT IS THE OWNER'S RESPONSIBILITY TO MAINTAIN THE VEGETATION AND REMOVE TRASH AND DEBRIS AROUND THE PERIMETER OF THE PROJECT, EVEN IF WITHIN THE PUBLIC ROW, IN ACCORDANCE WITH THE CITY OF ALPHARETTA PROPERTY MAINTENANCE CODES.
11. ALL APPROVED REVISIONS TO THE LOCATION OF THE TREE SAVE FENCE NEED TO BE COORDINATED WITH THE LAND DISTURBANCE INSPECTOR PRIOR TO RELOCATION.

PROJECT GEOTECHNICAL ENGINEER TO PERFORM A FIELD TEST OF PROPOSED INFILTRATION AREAS (UNDERGROUND DETENTION, PERVIOUS PAVEMENTS AND PLANTERS) TO DETERMINE THAT NATIVE SOILS WILL HAVE MINIMUM DESIGN INFILTRATION RATE OF 0.5 INCHES/HOUR.

24-HOUR CONTACT:
BRYAN HENDERSON
404 271-8403

UNDERGROUND DETENTION

THE CO (CERTIFICATE OF OCCUPANCY) CERTIFICATION WILL REQUIRE PICTURES OF THE UNDERGROUND DETENTION INSTALLATION.

A SEPARATE BUILDING PERMIT WILL BE REQUIRED. ALL WALLS OVER 4'-0" REQUIRE FENCING OR ACCEPTABLE DENSE VEGETATION AT THE TOP PER UDC ARTICLE IV 4.4.5J.

TW/BW: IS TO THE FINISHED GRADE UNLESS OTHERWISE SPECIFIED

ABBREVIATIONS

APPROX = APPROXIMATE
BC = BACK OF CURB
BFE = BOTTOM FLOOR ELEVATION
BM = BENCHMARK
BW = BOTTOM OF WALL
BLDG = BUILDING
B/L = BUILDING LINE
CB = CATCH BASIN
C/L = CENTERLINE
CO = CLEANOUT
CONC = CONCRETE
CMF = CONCRETE MONUMENT FOUND
CMP = CORRUGATED METAL PIPE
CSP = CORRUGATED STEEL PIPE
CF = CUBIC FEET
C&G = CURB & GUTTER
CTF = CRIMP TOP FOUND
DIA = DIAMETER
DE = DRAINAGE EASEMENT
DI = DROP INLET
DIP = DUCTILE IRON PIPE
DWCB = DOUBLE WING CATCH BASIN
EP = EDGE OF PAVEMENT
ELEV = ELEVATION
EX = EXISTING
FC = FACE OF CURB
FT = FEET
FFE = FINISHED FLOOR ELEVATION
FH = FIRE HYDRANT
FES = FLARED END SECTION
FM = FORCE MAIN
GPMH = GEORGIA POWER MANHOLE
GI = GRATE INLET
GR = GROUND
GW = GUY WIRE
HW = HEADWALL
HDPE = HIGH DENSITY POLYETHYLENE
HP = HIGH POINT
INV = INVERT
IE = INVERT ELEVATION
IPF = IRON PIN FOUND
IPS = IRON PIN SET - 1/2" REBAR
ICV = IRRIGATION CONTROL VALVE
JB = JUNCTION BOX
LLL = LAND LOT LINE
LP = LIGHT POLE
LOWP = LOW POINT
MH = MANHOLE
MSL = MEAN SEA LEVEL
OTP = OPEN TOP PIPE
OCS = OUTLET CONTROL STRUCTURE
PVMT = PAVEMENT
PED = PEDESTAL
PKF = PK NAIL FOUND
PCP = POLYVINYL CHLORIDE PIPE
POB = POINT OF BEGINNING
PWR = POWER
PP = POWER POLE
PTP = POWER/TELEPHONE POLE
P/L = PROPERTY LINE
PROP = PROPOSED
RB = REBAR
RCP = REINFORCED CONCRETE PIPE
R/W = RIGHT-OF-WAY
SSE = SANITARY SEWER EASEMENT
SSMH = SANITARY SEWER MANHOLE
SWCB = SINGLE WING CATCH BASIN
S/W = SIDEWALK
SF = SQUARE FEET
TEL = TELEPHONE
TB = TOP OF BANK
TC = TOP OF CURB
TPOB = TRUE POINT OF BEGINNING
TW = TOP OF WALL
TRANS = TRANSFORMER
UG = UNDERGROUND
UGTM = UG TELEPHONE MARKER
WM = WATER METER
WV = WATER VALVE
YI = YARD INLET

LEGEND

LINETYPES
BRANCH/CREEK
FENCE
GAS LINE
LAND LOT LINE
PLUGGED PIPE/STUB
POWER LINE
SANITARY SEWER LINE
STORM DRAINAGE LINE
TELEPHONE LINE
TRAVERSE LINE/POINT
WATER LINE

SYMBOLS
PROPERTY CORNER
SIGN
SSMH
STUB
HYDRANT
WATER METER
WATER VALVE
LIGHT POST
UTILITY POLE

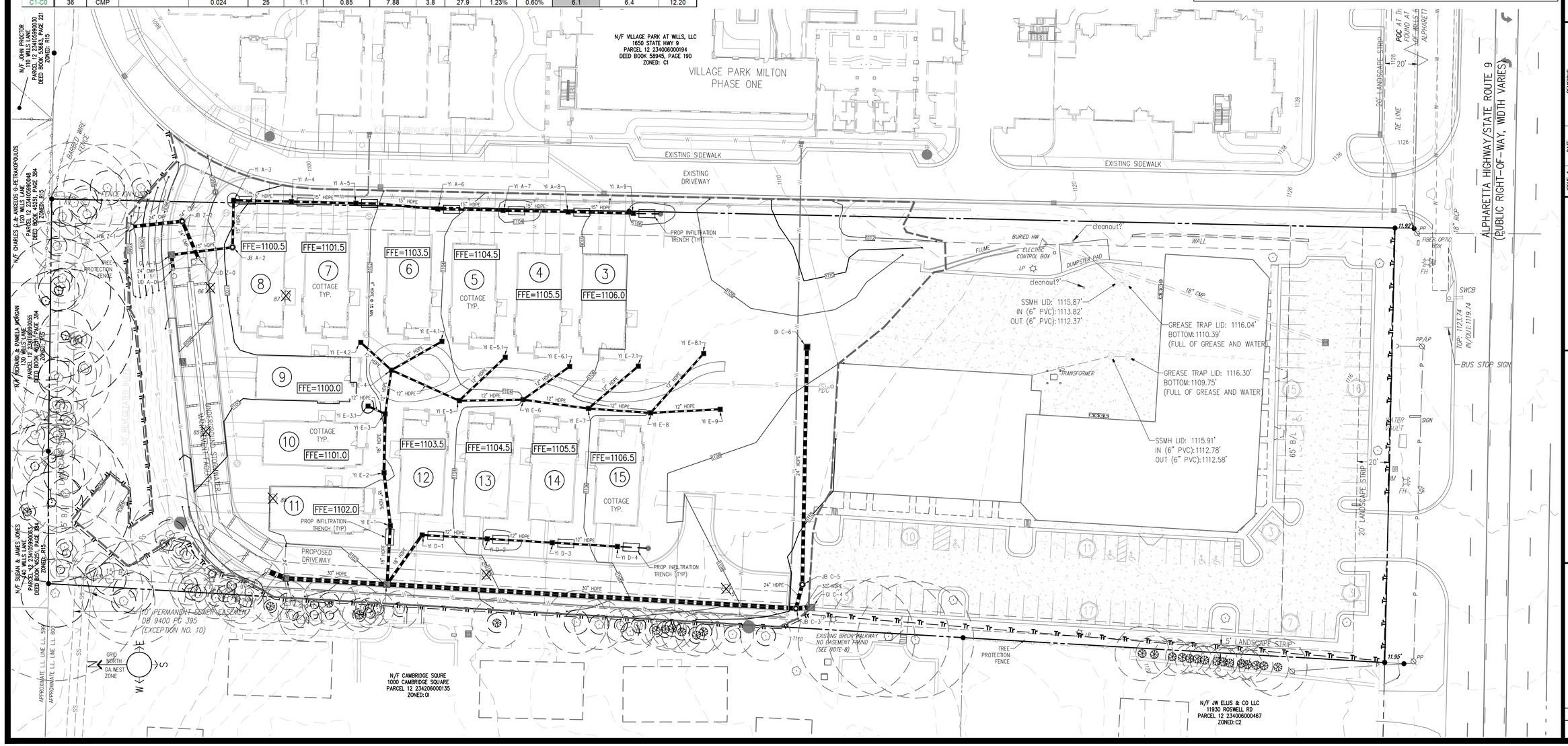

BLUE LANDWORKS
CONSULTING ENGINEERS & SURVEYORS
LICENSE # PEF005518
LICENSE # LSF001044
5019 WEST BROAD STREET
SUITE M230
SUGAR HILL, GEORGIA 30518
TELEPHONE: (678) 804-8586
INFO@BLUELANDWORKS.COM
WWW.BLUELANDWORKS.COM

PREPARED FOR:
VILLAGE PARK SENIOR LIVING, LLC
1170 PEACHTREE STREET SUITE 1700
ATLANTA, GA 30326
PHONE: 678 677-8600
CONTACT: BRYAN HENDERSON
EMAIL: bryan@paperwhitehg.com

GEORGIA REGISTERED No. 27067 PROFESSIONAL ENGINEER JONATHAN H. NIXOL

ISSUE #	DATE	REVISIONS
1	10/12/2021	SUBMIT FOR REVIEW

SCALE: 1" = 30'
0 30 60 90 feet
scale

VILLAGE PARK MILTON
PHASE TWO
11940 ALPHARETTA HIGHWAY
PARCEL(S) 12-2340060066
CITY OF ALPHARETTA
FULTON COUNTY, GA
LAND LOT 600, 1ST DISTRICT
DRAWN: CC
CHECKED: JN

GRADING PLAN

PROJECT# 2019.099
C-130

X:\2019-099 - 11940 Alpharetta Hwy\1000 - AutoCAD\30 - Construction\2019.099 VP Milton_SITE.dwg, C-130 10/12/2021 8:56 AM by Grant Crowe

HORIZONTAL SCALE: 1" = 50'
VERTICAL SCALE: 1" = 10'

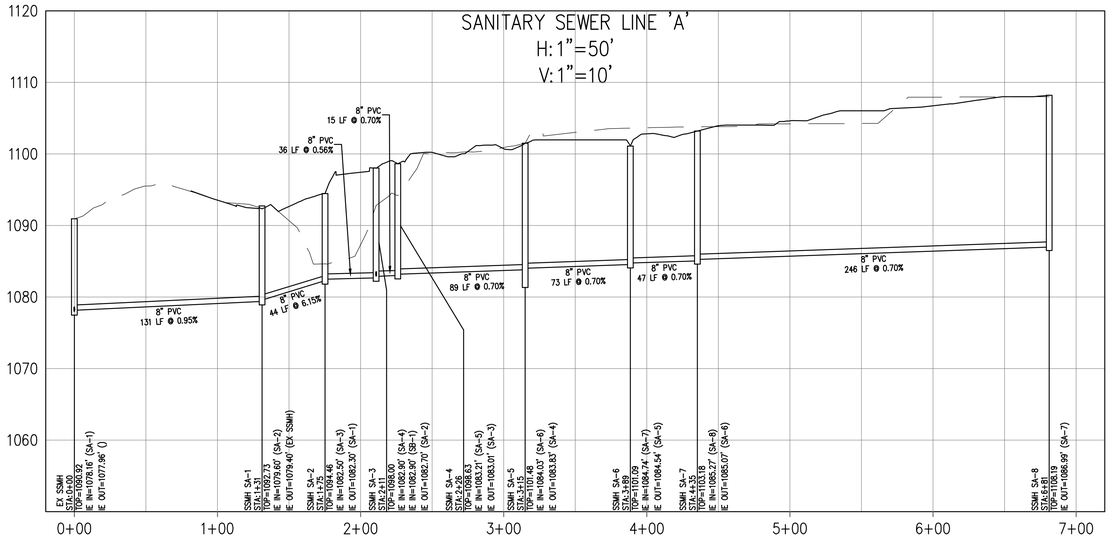

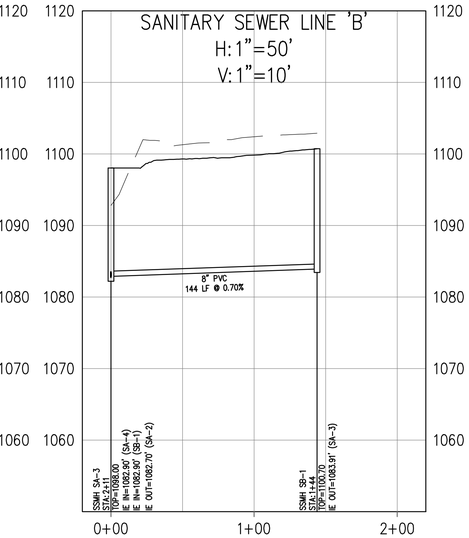

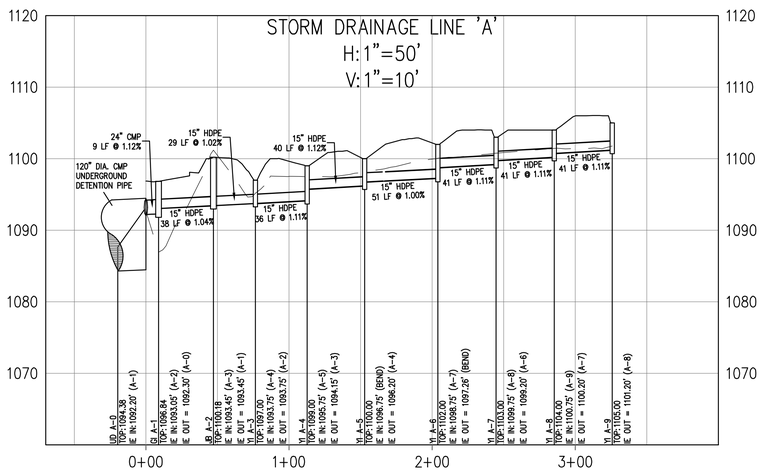

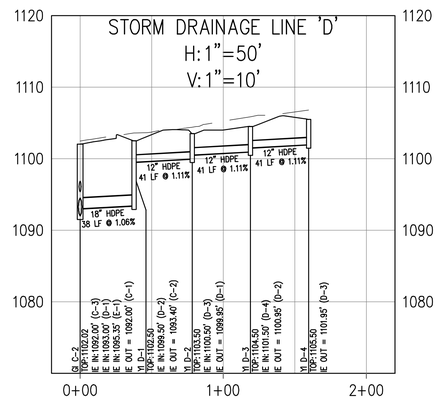

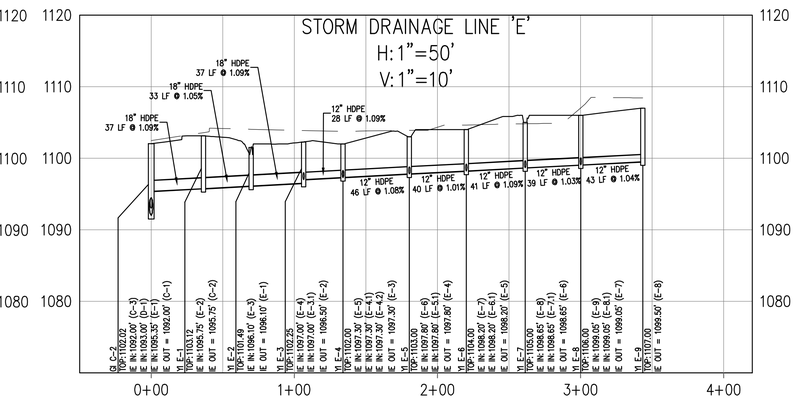

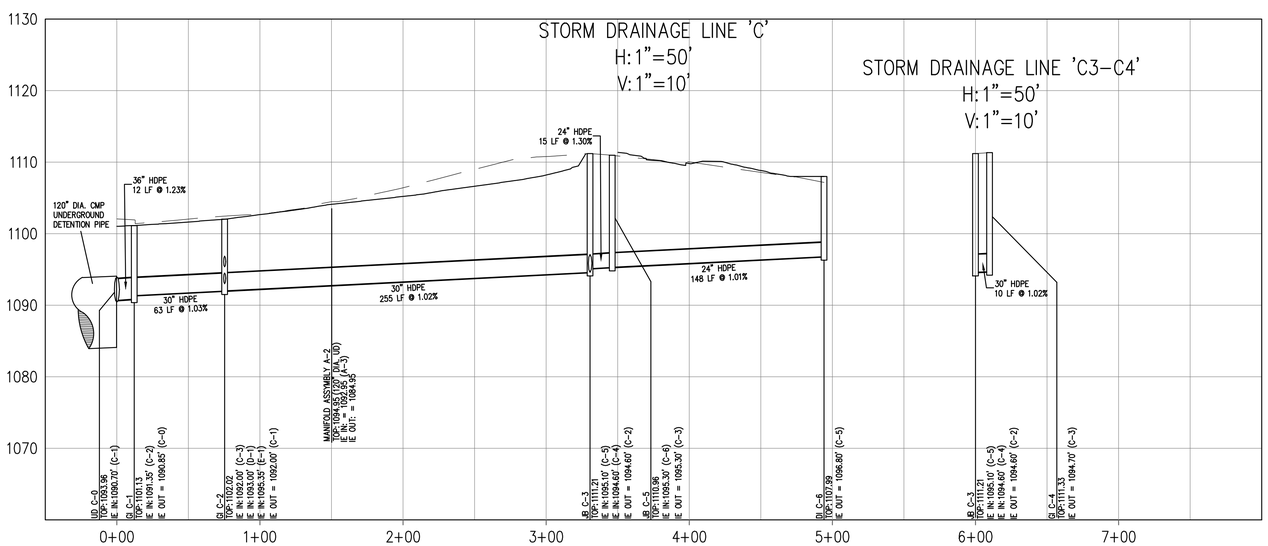

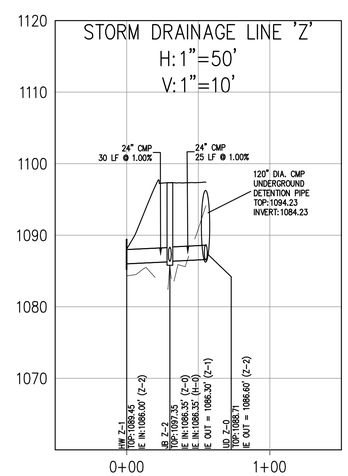

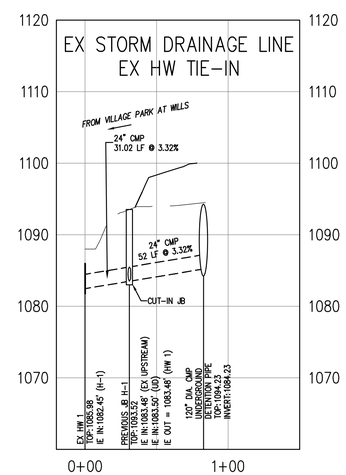

BLUE LANDWORKS
CONSULTING ENGINEERS & SURVEYORS
LICENSE # PEF005518
LICENSE # LSF001044
5019 WEST BROAD STREET
SUITE M230
SUGAR HILL, GEORGIA 30518
TELEPHONE: (678) 804-8586
INFO@BLUELANDWORKS.COM
WWW.BLUELANDWORKS.COM

PREPARED FOR:
VILLAGE PARK SENIOR LIVING, LLC
1175 PEACHTREE ST SUITE 1700
ATLANTA, GA 30326
PHONE: 678 677-6600
CONTACT: BRYAN WILKINSON
EMAIL: bryan@gaterelivingcom

GEORGIA REGISTERED No. 27067 PROFESSIONAL ENGINEER JONATHAN H. NIESOL

ISSUE #	DATE	REVISIONS
1	10/12/2021	SUBMIT FOR REVIEW

VILLAGE PARK MILTON
PHASE TWO
11940 ALPHARETTA HIGHWAY

PARCEL(S) 12-2340060056
CITY OF ALPHARETTA
LAND LOT 600, 1ST DISTRICT
FULTON COUNTY, GA
DRAWN: CC
CHECKED: JN

SANITARY SEWER AND STORM DRAINAGE PROFILES

PROJECT# 2019.099

C-150

V:\2019-099 - 11940 Alpharetta Hwy\000 - AutoCAD\30 - Construction\2019.099 IP Milton_SITE.dwg, C-300 10/12/2021 8:56 AM by Grant Crowe

RISER DETAIL

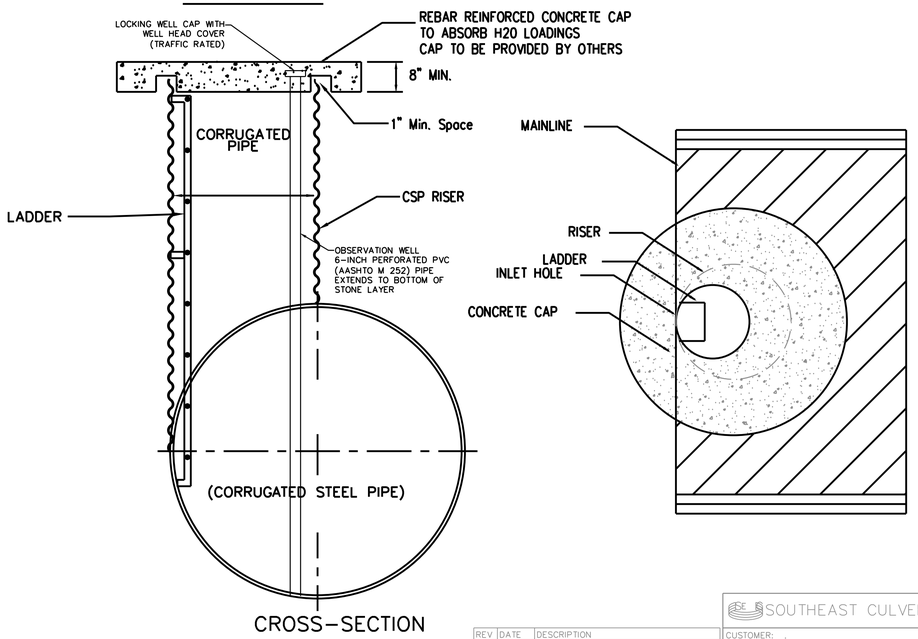

CROSS-SECTION

REV	DATE	DESCRIPTION
.	.	.
.	.	.
.	.	.
.	.	.
.	.	.

SOUTHEAST CULVERT, INC.

CUSTOMER: .
PROJECT: .
LOCATION:
MATERIAL: RISER
QUANTITY:
SCALE: N/A
DWG: RISER
SHT | SHTS | A

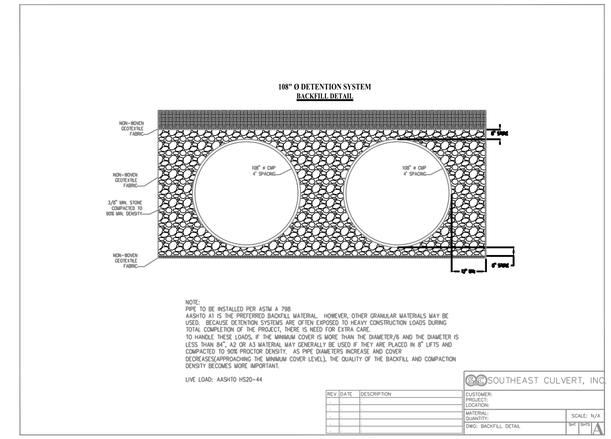

NOTE:
PIPE TO BE INSTALLED PER ASTM A 798
AASHTO A1 IS THE PREFERRED BACKFILL MATERIAL. HOWEVER, OTHER GRANULAR MATERIALS MAY BE USED. BECAUSE DETENTION SYSTEMS ARE OFTEN EXPOSED TO HEAVY CONSTRUCTION LOADS DURING TOTAL COMPLETION OF THE PROJECT, THERE IS NEED FOR EXTRA CARE.
TO HANDLE THESE LOADS, IF THE MINIMUM COVER IS MORE THAN THE DIAMETER/S AND THE DIAMETER IS LESS THAN 84", A2 OR A3 MATERIAL MAY GENERALLY BE USED IF THEY ARE PLACED IN 8" LIFTS AND COMPACTED TO 90% PROCTOR DENSITY. AS PIPE DIAMETERS INCREASE AND COVER DECREASES(APPROACHING THE MINIMUM COVER LEVEL), THE QUALITY OF THE BACKFILL AND COMPACTION DENSITY BECOMES MORE IMPORTANT.

LIVE LOAD: AASHTO HS20-44

SOUTHEAST CULVERT, INC.

REV	DATE	DESCRIPTION
.		
.		
.		
.		
.		

CUSTOMER:
PROJECT:
LOCATION:
MATERIAL:
QUANTITY:
SCALE: N/A
DWG: BACKFILL DETAIL
SHT | SHTS | A

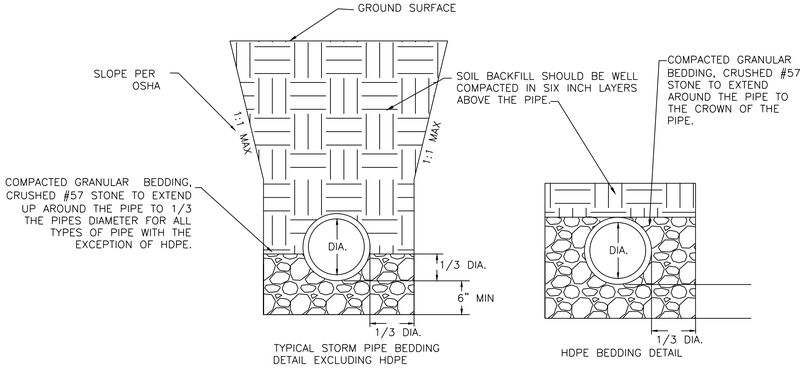

TYPICAL STORM PIPE BEDDING DETAIL EXCLUDING HDPE

HDPE BEDDING DETAIL

STORM PIPE BEDDING DETAIL

NOT TO SCALE

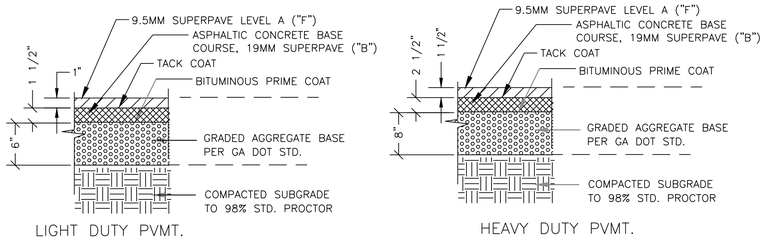

NOTE: ASPHALTIC CONCRETE PAVING TO MEET GEORGIA DEPARTMENT OF TRANSPORTATION STANDARDS.

LIGHT DUTY PVMT.

HEAVY DUTY PVMT.

NOTE: SURFACE COURSE NOT TO BE PAVED UNTIL ALL HEAVY CONSTRUCTION (AND RELATED TRAFFIC) IS COMPLETE

LIGHT AND HEAVY DUTY PAVEMENT

NOT TO SCALE

Atlanta Corrugating, LLC · PO BOX 999 · Auburn, Georgia 30011
Phone (770) 963-5941 Fax (770) 339-0240 · email: info@southeastculvert.com

Max Flow Spiral Rib Pipe

Structural Strength

Max Flow Spiral Rib Pipe
HS 20 Height of Cover Tables
Round Pipe

Dia. (in)	Minimum Cover / Maximum Cover (feet)* Thickness and Gage (0.064") 16	(0.079") 14	(0.109") 12	(0.138") 10	Manning's "n" for full flow - unpaved
15		1.0/105			0.012
18		1.0/96			0.012
24		1.0/72			0.012
30		1.0/58	1.0/97		0.012
36		1.0/48	1.0/81		0.012
42		1.0/41	1.0/69		0.012
48		1.0/36	1.0/61		0.012
54		1.5/32	1.0/54		0.012
60		1.5/28	1.0/49	1.0/71	0.012
66		1.5/26	1.0/44	1.0/63	0.012
72		<1.5/24>	1.5/40	1.0/58	0.012
78		<2.0/22>	1.5/37	1.5/53	0.012
84			2.0/35	1.5/50	0.012
90			<2.0/32>	2.0/46	0.012
96			<2.0/30>	<2.0/43>	0.012
102			<2.5/29>	<2.0/42>	0.012

NOTES:
1. All metric minimum cover is measured from top of pipe to bottom of flexible pavement or top of pipe to top of rigid pavement. Minimum cover in unpaved areas must be minimized. For heavy construction loads, greater minimum cover may be required.
2. French extra-strengthen is required for these heights of cover, contact manufacturer for embankment type installations.
3. All installations done in accordance with ASTM A798.
4. <> indicates these site and pipe combinations require installation in accordance with ASTM A798 paragraphs 12.2.3 and ASTM A798
5. Soil bearing capacity within 3x the soil in the region of the pipe corners. The remaining backfill must be compacted to a specified AASHTO T-99 density of 90% Minimum to 2 feet OD.
6. Pipe Arch maximum cover is 2 feet for all sizes.

Pipe Arch

Span & Rise, (Inches)	Round Pipe Equiv. (Inches)	Minimum Cover, Inches	Minimum Specified Sheet Thickness Required (Inch)
20 x 16	18	12	0.064
27 x 21	24		0.064
33 x 26	30		0.064
40 x 31	36	12	0.064
46 x 36	42	18	0.079
53 x 41	48		0.079
60 x 46	54		0.109
66 x 51	60		0.109
73 x 55	66	18	0.109
81 x 59	72	21	0.138

Bedding and Backfill

Proper bedding preparation is critical to both pipe performance and service life. Satisfactory backfill material, proper placement and compaction are key factors in obtaining structural performance.

Typical trench installations require the same backfill material and techniques as required in ASTM A798 for standard corrugated steel pipe. Only when installations fall under the category indicated by < > are class, easily compacted granular backfill materials required. Please inquire for embankment fill installations.

Heavy construction loads may require higher minimum compacted cover over the pipe. Please refer to the National Corrugated Steel Pipe Association guidelines for these loadings.

Construction Loads

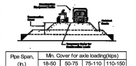

Pipe Span, (in.)	Min. Cover for axle loading(kips) 18-50	50-75	75-110	110-150
12-42	2.0	2.5	3.0	3.0
48-72	3.0	3.0	3.5	4.0
78-120	3.0	3.5	4.0	4.0
126-144	3.5	4.0	4.5	4.5

No express warranties of merchantability or fitness are created or intended by the document or its illustrative text.

Max Flow Spiral Rib Pipe

Installation Specification

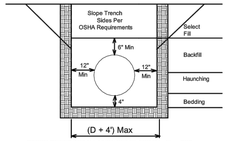

STORM SEWER INSTALLATION DETAIL FOR Max Flow SRP

1. The pipe bedding is a relatively thin layer of loosely placed material to cushion the pipe invert and allow the pipe to rest or seat into it, thus supporting the pipe. When, in the opinion of the Engineer, the natural soil does not provide a suitable bed, a bedding blanket with a minimum thickness of 4" depth shall be provided.
2. Haunching and pipe backfill shall be granular material as specified by AASHTO M-145 for A-1, A-2, or A-3 (silty, clayey materials, sandy material, or gravel materials). Local on site material may be acceptable backfill, consult the Engineer. Place material in 8 inch loose lifts and compact to 90% standard proctor (AASHTO T99).
3. Minimum cover is measured from outside of the pipe wall to the bottom of asphalt layer or the top of concrete pavement. Check each size for actual minimum cover for H20 loading.

TABLE 2 Classification of Soils and Soil-Aggregate Mixtures

General Classification	Granular Materials (35 Percent or Less Passing 0.075 mm)						
	A-1		A-3	A-2			
Group Classification	A-1-a	A-1-b	A-3	A-2-4	A-2-5	A-2-6	A-2-7
Sieve Analysis, percent passing:							
2.00 mm (No. 10)	50 max			—	—	—	—
0.425 mm (No. 40)	30 max	50 max	51 min	—	—	—	—
0.075 mm (No. 200)	15 max	25 max	10 max	35 max	35 max	35 max	35 max
Characteristics of fraction passing 0.425 mm (No. 40)							
Liquid Limit				40 max	41 min	40 max	41 min
Plasticity Index	6 max		N.P.	10 max	10 max	11 min.	11 min.
Usual types of significant constituent materials	Stone fragments, gravel and sand		Fine sand	Silty or clayey gravel and sand			
General ratings as subgrade	Excellent to Good						

No express warranties of merchantability or fitness are created or intended by the document or its illustrative text.

MAX FLOW SPIRAL RIB PIPE (MFSRP)

Specification for Max Flow

Scope
This specification covers the manufacture of Max Flow Spiral Rib Pipe.

Material
The pipe material shall be [Aluminized, Galvanized, Bituminous Coated]

Pipe
Max Flow Spiral Rib Pipe shall be manufactured with minimum dimensions of 0.75" x 0.75" by a maximum 7-3/4" spaced external ribs. The pipe sizes and gages shall be as shown on the project plans.

Reference Specifications

Pipe	AASHTO M36, ASTM A760 Type IR (Rnd) Type IIR (Arch)
Material (ALT2)	AASHTO M274, ASTM A929
(Galv.)	AASHTO M218, ASTM A929
Design	AASHTO Sec 12, ASTM A796
Installation	AASHTO Sec 26, ASTM A798

BLUE LANDWORKS
CONSULTING ENGINEERS & SURVEYORS
LICENSE # PEF005518
LICENSE # LSF001044
5019 WEST BROAD STREET
SUITE M230
SUGAR HILL, GEORGIA 30518
TELEPHONE: (678) 804-8586
INFO@BLUELANDWORKS.COM
WWW.BLUELANDWORKS.COM

PREPARED FOR:
VILLAGE PARK SENIOR LIVING, LLC
1940 ALPHARETTA HIGHWAY, SUITE 1100
ATLANTA, GA 30326
PHONE:
CONTACT: BRYAN HODGSON
EMAIL: bryan@bjpardesing.com

GEORGIA REGISTERED No. 27087 PROFESSIONAL ENGINEER JONATHAN H. NIESOL

ISSUE #	DATE	REASONS
1	10/12/2021	SUBMIT FOR REVIEW

VILLAGE PARK MILTON
PHASE TWO
1940 ALPHARETTA HIGHWAY

PARCEL(S) 12-2340060066
CITY OF ALPHARETTA
LAND LOT 600, 1ST DISTRICT
FULTON COUNTY, GA
DRAWN: CC
CHECKED: JN

DETAILS

PROJECT# 2019.099

C-170

V:\2019-099 - 1940 Alpharetta Hwy\000 - AutoCAD\30 - Construction\2019.099 @ Milton_DETAILS.dwg, C-170 10/7/2021 4:00 PM by Grant Crowe

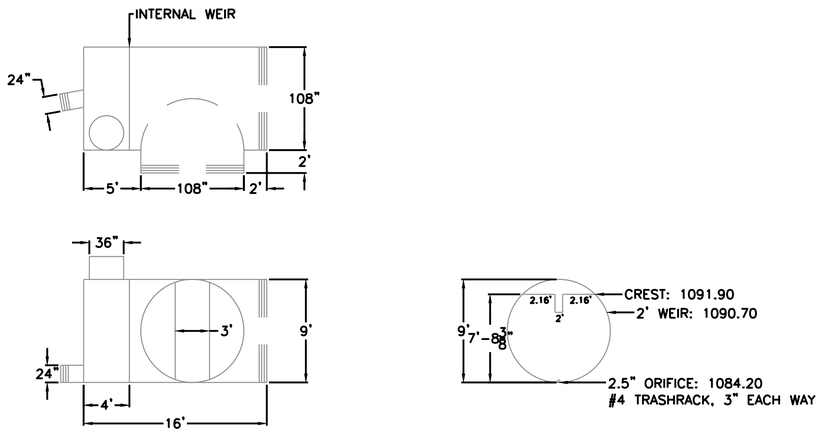

REV	DESCRIPTION	BY	DATE

PROPRIETARY & CONFIDENTIAL: THIS DRAWING IS THE SOLE PROPERTY OF SOUTHEAST CULVERT, INC. AND CONTAINS PROPRIETARY INFORMATION THAT IS APPLICABLE TO THIS PROJECT ONLY. ANY DIFFERENCE BETWEEN DESIGN INFORMATION PROVIDED AS NOTED IN GENERAL NOTES WHICH THESE DRAWINGS ARE BASED UPON AND FIELD CONDITIONS AT TIME OF CONSTRUCTION MUST BE REPORTED TO SEC IMMEDIATELY FOR REEVALUATION OF WHAT IS BEING PROVIDED IN THESE DRAWINGS. SEC IS NOT LIABLE FOR INCOMPLETE/ INACCURATE/ OUT-UPDATED DRAWINGS/ CHANGES IN FIELD CONDITIONS SUPPLIED BY OTHERS. ANY REPRODUCTION OR MODIFICATION WITHOUT WRITTEN PERMISSION IS STRICTLY PROHIBITED.

SOUTHEAST CULVERT
1294 Bankhead Hwy, Winder, GA 30680
P: 770-868-5599 | Fax: 770-868-5735
www.southeastculvert.com

VILLAGE PARK MILTON PH 2
CUSTOMER

OCS

DATE:	SCALE: NA	DESIGNED BY:	PROJECT NUMBER:
		DRAWN BY: MHM	SHEET NO. OF
		CHECKED BY:	

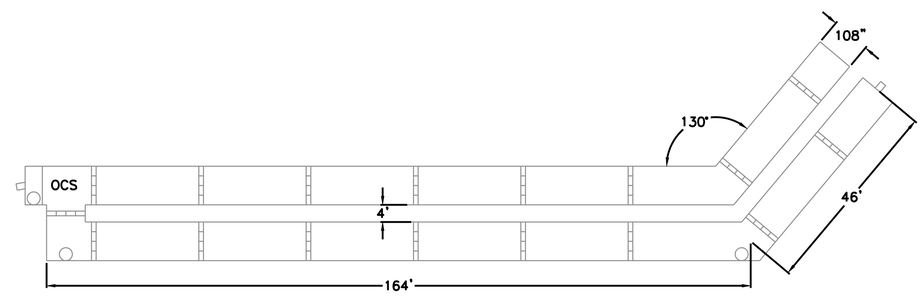

*108", 12 GAUGE, 5X1 AT2.
*PIPE TO BE ALUMINIZED STEEL TYPE 2 PER AASHTO M274.
*SYSTEM TO BE INSTALLED PER AASHTO SECTION26.

REV	DESCRIPTION	BY	DATE

PROPRIETARY & CONFIDENTIAL: THIS DRAWING IS THE SOLE PROPERTY OF SOUTHEAST CULVERT, INC. AND CONTAINS PROPRIETARY INFORMATION THAT IS APPLICABLE TO THIS PROJECT ONLY. ANY DIFFERENCE BETWEEN DESIGN INFORMATION PROVIDED AS NOTED IN GENERAL NOTES WHICH THESE DRAWINGS ARE BASED UPON AND FIELD CONDITIONS AT TIME OF CONSTRUCTION MUST BE REPORTED TO SEC IMMEDIATELY FOR REEVALUATION OF WHAT IS BEING PROVIDED IN THESE DRAWINGS. SEC IS NOT LIABLE FOR INCOMPLETE/ INACCURATE/ OUT-UPDATED DRAWINGS/ CHANGES IN FIELD CONDITIONS SUPPLIED BY OTHERS. ANY REPRODUCTION OR MODIFICATION WITHOUT WRITTEN PERMISSION IS STRICTLY PROHIBITED.

SOUTHEAST CULVERT
1294 Bankhead Hwy, Winder, GA 30680
P: 770-868-5599 | Fax: 770-868-5735
www.southeastculvert.com

VILLAGE PARK MILTON PH 2
CUSTOMER

SYSTEM LAYOUT

DATE:	SCALE: NA	DESIGNED BY:	PROJECT NUMBER:
		DRAWN BY: MHM	SHEET NO. OF
		CHECKED BY:	

BLUE LANDWORKS
CONSULTING ENGINEERS & SURVEYORS
LICENSE # PEF005518
LICENSE # LSF001044
5019 WEST BROAD STREET
SUITE M230
SUGAR HILL, GEORGIA 30518
TELEPHONE: (678) 804-8586
INFO@BLUELANDWORKS.COM
WWW.BLUELANDWORKS.COM

PREPARED FOR:
VILLAGE PARK SENIOR LIVING, LLC
1180 PEACHTREE ST SUITE 1700
ATLANTA, GA 30326
PHONE: 678 677-8600
CONTACT: BRYAN HUDDSON
EMAIL: bryan@bpdevelop.com

GEORGIA REGISTERED No. 27087 PROFESSIONAL ENGINEER JONATHAN H. NIESOL

ISSUE #	DATE	REVISIONS
1	10/12/2021	SUBMIT FOR REVIEW

VILLAGE PARK MILTON
PHASE TWO
11940 ALPHARETTA HIGHWAY

PARCEL(S) 12-2340060066
CITY OF ALPHARETTA
LAND LOT 600, 1ST DISTRICT
FULTON COUNTY, GA
DRAWN: GC
CHECKED: JN

DETAILS

PROJECT# 2019.099

C-171

V:\2019-099 - 11940 Alpharetta Hwy\1000 - AutoCAD\30 - Construction\2019.099 VP Milton_DETAILS.dwg, C-171 10/7/2021 4:00 PM by Grant Crowe

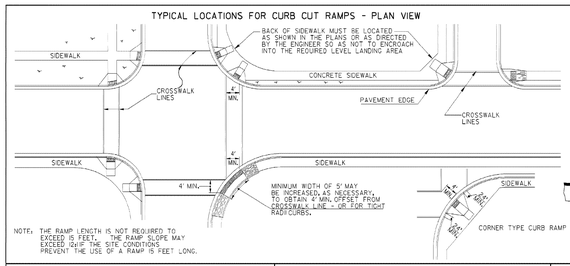

NOTE: THE RAMP LENGTH IS NOT REQUIRED TO EXCEED 15 FEET, THE RAMP SLOPE MAY EXCEED 1:12 IF THE SITE CONDITIONS PREVENT THE USE OF A RAMP IS FEET LONG.

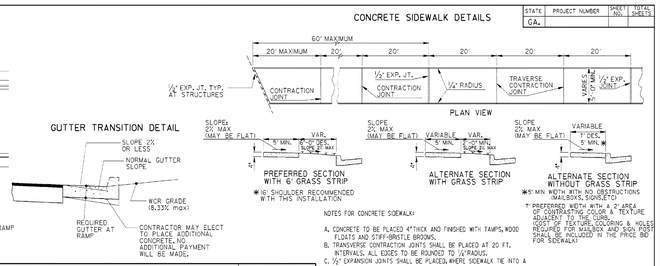

STATE	PROJECT NUMBER	SHEET NO.	TOTAL SHEETS
GA.			

NOTES FOR CONCRETE SIDEWALK:

A. CONCRETE TO BE PLACED 4" THICK AND FINISHED WITH TAMPS, WOOD FLOATS AND STIFF-BRISTLE BROOMS.
B. TRANSVERSE CONTRACTION JOINTS SHALL BE PLACED AT 20 FT. INTERVALS. ALL EDGES TO BE ROUNDED TO ½" RADIUS.
C. ½" EXPANSION JOINTS SHALL BE PLACED WHERE SIDEWALK TIE INTO A STRUCTURE OR TERMINATE AT CURB, RAMPS OR DRIVEWAYS AND AT 60' INTERVALS.

NOTES FOR CURB CUT RAMPS:

1. CURB CUT RAMPS WILL BE LOCATED AS FOLLOWS UNLESS PLANS OR CONTRACT SPECIFY OTHERWISE.
   a) AT ALL PEDESTRIAN CROSSWALKS WHERE CURB IS CONSTRUCTED OR REPLACED.
   b) WHERE THE SIDEWALK, CONCRETE OR UNPAVED, IS INTERRUPTED BY THE CURB AT TURNOUTS OR AT INTERSECTIONS.
   c) AT OTHER LOCATIONS SUCH AS HOSPITALS, NURSING HOMES, REST AREAS, ETC., WHERE THE CURB WOULD OTHERWISE BE AN OBSTRUCTION TO THE PHYSICALLY DISABLED.
2. RAMPS WILL BE CONSTRUCTED FROM CONCRETE. SPECIFICATIONS FOR RAMPS WILL BE THE SAME AS FOR CONCRETE SIDEWALK. RAMPS SHALL HAVE EITHER A ROUGH OR A TEXTURED FINISH.
3. DROP INLETS ARE NOT TO BE LOCATED DIRECTLY IN FRONT OF RAMPS. CATCH BASINS SHOULD BE LOCATED AT LEAST 10 FT. FROM RAMPS WHEN FEASIBLE.
4. WHERE RAMPS ARE LOCATED IN RADII, THE DIMENSIONS SHOWN FOR RAMP WIDTHS AND TAPERS ARE MEASURED PERPENDICULAR TO THE RAMP AND NOT ALONG THE CURVE.
5. WHERE UTILITY STRUCTURES CONFLICT, WHERE SIDEWALK GEOMETRY VARIES, AT SKEWED INTERSECTIONS, OR IN OTHER SPECIAL CASES, THE RAMP DESIGN MAY BE MODIFIED BY THE DESIGNER OR ENGINEER, PROVIDED THAT THE WIDTH REMAINS A MINIMUM OF 48 INCHES, AND NO SLOPE ON THE ACCESSIBLE PART OF THE RAMP IS STEEPER THAN 12:1.
6. 1.1%, FT. OF CURB AND GUTTER WILL INCLUDE THE TRANSITIONED CURB IN FRONT OF RAMPS, 50% 1.1%, OF CONCRETE SIDEWALK AND CONCRETE MEDIAN PAVING WILL INCLUDE RAMPS. NO ADDITIONAL PAYMENT WILL BE MADE FOR CURB RAMPS. NO ADDITIONAL PAYMENT WILL BE MADE FOR SAWING AND REMOVING EXISTING SIDEWALK OR CURB WHERE NECESSARY FOR RAMP CONSTRUCTION.
7. WHEN A CURB RAMP IS PLACED ON EXISTING PAVEMENT, THE PAVEMENT SHALL BE REMOVED TO PROVIDE A MINIMUM THICKNESS OF 3 INCHES OF CONCRETE AT ALL LOCATIONS. NO SEPARATE PAYMENT WILL BE MADE FOR REMOVAL OF THE PAVEMENT.
8. DETECTABLE WARNING SURFACES ARE REQUIRED ON ALL INTERSECTIONS WITH PUBLIC STREETS, SIGNALIZED COMMERCIAL DRIVEWAYS, AND COMMERCIAL DRIVEWAYS WITH AN ADT OF 25 VPD.

Type A

(The Preferred Ramp)

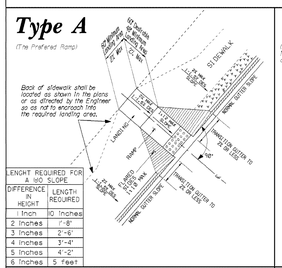

LENGHT REQUIRED FOR A 1:10 SLOPE	
DIFFERENCE IN HEIGHT	LENGTH REQUIRED
1 Inch	10 Inches
2 Inches	1'-8"
3 Inches	2'-6"
4 Inches	3'-4"
5 Inches	4'-2"
6 Inches	5 feet

Type B

(Normally used when space is not available for a landing at the top of a Type A Ramp)

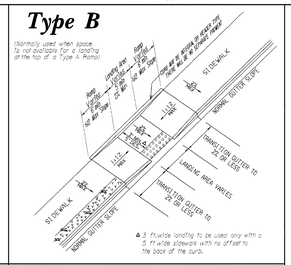

Type C

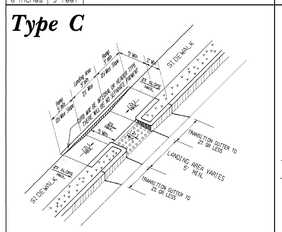

Type D

(Normally used when the sidewalk flag directly into the crosswalk)

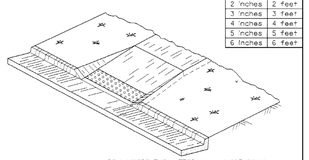

IN AREAS WHERE THE GUTTER HAS A SLOPE 1" IN 1' END NORMAL GUTTER SLOPE 12" A DISTANCE OF 6 TO 10 FEET FROM THE RAMP AND BEGIN TRANSITION TO A FLAT GUTTER SLOPE. NORMAL GUTTER SLOPE SHALL BE RESUMED AT A SIMILAR DISTANCE BEYOND THE RAMP.

LENGHT REQUIRED FOR A 1:12 SLOPE	
DIFFERENCE IN HEIGHT	LENGTH REQUIRED
1 Inch	1 foot
2 Inches	2 feet
3 Inches	3 feet
4 Inches	4 feet
5 Inches	5 feet
6 Inches	6 feet

Skewed Ramp Details

(Applies to Type A & Type D Ramps Only)

WHEN THE RAMP CENTERLINE IS NOT PERPENDICULAR TO THE CURB A LEVEL LANDING AREA WITH SLOPES LESS THAN 2% MUST BE PROVIDED AT THE BOTTOM OF THE RAMP.

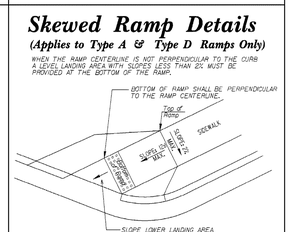

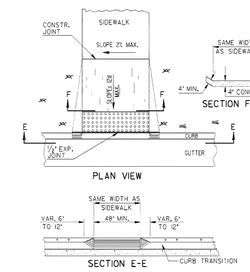

This Detail Replaces Ga Standard 9031W

Guidelines For Usage On Metric Projects

When these details are incorporated into plans and or projects that are being prepared or constructed in metric units, exact or precise conversion to metric units is not required. The dimensions shown that are in feet and inches may be converted to corresponding metric units using the following: 1 foot=0.3048 conversion factors 1" =25mm, 4"=100mm, and 12" or 1' =300mm. All measurement notes that refer to linear feet and square yards shall be interpreted to mean linear meters and square meters.

NO.	DATE	REVISION
1	10-01-96	REVISED
2	3-29-05	REVISED
3	7-20-07	REVISED
4	5-29-02	REVISED
5	5-23-03	REVISED
6	4-25-05	REVISED
7	4-25-06	REVISED
8	4-15-03	REVISED
9	7-28-03	REVISED
10		REVISED

NO SCALE; IS PREFERRED AS CONCRETE MAY BE ADDED TO THE ORIGINAL DESIGN.

DEPARTMENT OF TRANSPORTATION
STATE OF GEORGIA

SPECIAL DETAIL
CONCRETE SIDEWALK DETAILS
CURB CUT (WHEELCHAIR) RAMPS

NO SCALE — MARCH 12, 2002 — NUMBER A3

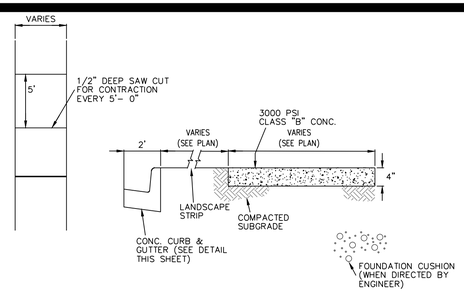

SIDEWALK DETAIL

NOT TO SCALE

NOTES:
1. 1/2" PREFORMED EXPANSION JOINTS REQUIRED AT ALL STRUCTURES AND CURB RETURNS.
2. MAXIMUM DISTANCE BETWEEN EXPANSION JOINT = 40.0'.
3. DISTANCE BETWEEN DUMMY JOINT = 10.0'.
4. CONCRETE STRENGTH = 3000 PSI, SLUMP= 2", FINISH SHALL BE SMOOTHED & EVENED WITH A WOODEN FLOAT.

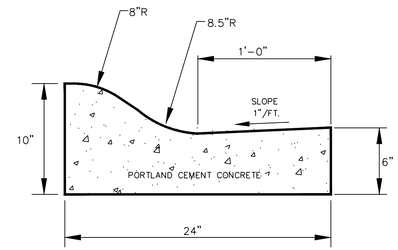

ROLLED TYPE CURB AND GUTTER

NOT TO SCALE

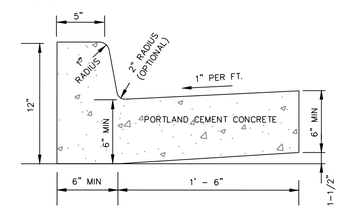

HIGH-BACK CURB & GUTTER

NOT TO SCALE

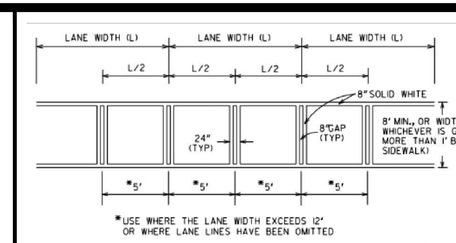

CROSSWALK DETAIL

NOT TO SCALE

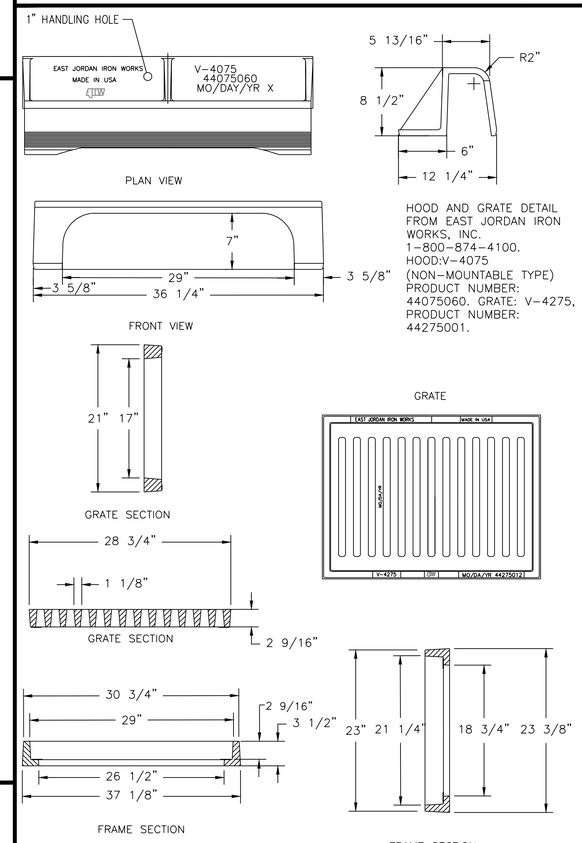

HOOD AND GRATE DETAIL FROM EAST JORDAN IRON WORKS, INC. 1-800-874-4100. HOOD:V-4075 (NON-MOUNTABLE TYPE) PRODUCT NUMBER: 44075060. GRATE: V-4275, PRODUCT NUMBER: 44275001.

GRATE WITH HOOD

NOT TO SCALE

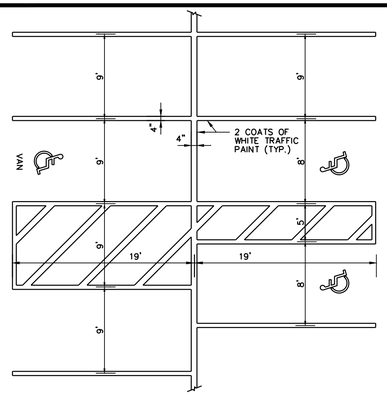

PAVEMENT STRIPING DETAIL

NOT TO SCALE

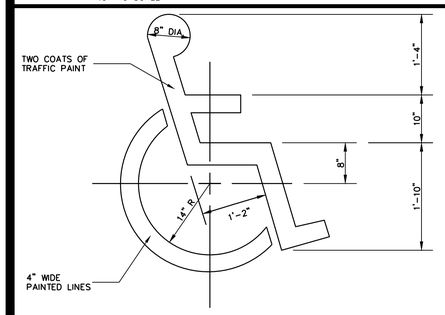

HANDICAPPED PARKING DETAIL

NOT TO SCALE

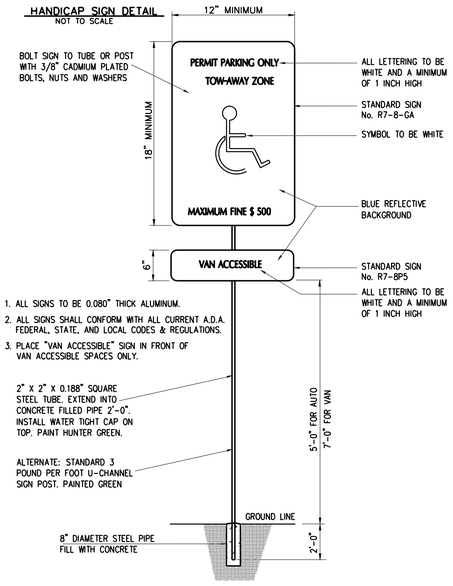

1. ALL SIGNS TO BE 0.080" THICK ALUMINUM.
2. ALL SIGNS SHALL CONFORM WITH ALL CURRENT A.D.A. FEDERAL, STATE, AND LOCAL CODES & REGULATIONS.
3. PLACE "VAN ACCESSIBLE" SIGN IN FRONT OF VAN ACCESSIBLE SPACES ONLY.

HANDICAP PARKING SIGN AND PLACEMENT DETAIL

NOT TO SCALE

TYPE I PAVEMENT SECTION: AVERAGE DAILY TRAFFIC (ADT) – 1000 VPD (LOCAL RESIDENTIAL STREET)				
	MATERIAL TYPE	TOTAL THICKNESS (INCHES)	MAX LIFT THICKNESS (INCHES)	NOTES
A	12.5 mm SUPERPAVE	1.5	2.5*	*ALLOW UP TO 4 INCHES THICK FOR DRIVEWAY AND SIDE ROAD TRANSITION
B	19 mm SUPERPAVE	2.0	3*	*ALLOW UP TO 6 INCHES PER LIFT FOR TRENCH WIDENING
C	25 mm SUPERPAVE	–	5*	*ALLOW UP TO 6 INCHES PER LIFT FOR TRENCH WIDENING
D	GRADED AGGREGATE BASE	6	6	COMPACTED TO 100 PERCENT OF THE MODIFIED PROCTOR MAXIMUM DRY DENSITY (AASHTO T180)
E	UPPER 12 INCHES SOIL SUBGRADE	12	–	COMPACTED TO AT LEAST 100 PERCENT OF STANDARD PROCTOR MAXIMUM DRY DENSITY (AASHTO T99)

TYPE II PAVEMENT SECTION: AVERAGE DAILY TRAFFIC (ADT) – 5000, 12000 & 16000 VPD (LOCAL RESIDENTIAL, 2 LANE RESIDENTIAL COLLECTOR & 2-3 LANE COLLECTOR STREETS)				
	MATERIAL TYPE	TOTAL THICKNESS (INCHES)	MAX LIFT THICKNESS (INCHES)	NOTES
A	12.5 mm SUPERPAVE	1.5	2.5*	*ALLOW UP TO 4 INCHES THICK FOR DRIVEWAY AND SIDE ROAD TRANSITION
B	19 mm SUPERPAVE	4	3*	*ALLOW UP TO 6 INCHES PER LIFT FOR TRENCH WIDENING
C	25 mm SUPERPAVE	–	5*	*ALLOW UP TO 6 INCHES PER LIFT FOR TRENCH WIDENING
D	GRADED AGGREGATE BASE	12	6	COMPACTED TO 100 PERCENT OF THE MODIFIED PROCTOR MAXIMUM DRY DENSITY (AASHTO T180)
E	UPPER 12 INCHES SOIL SUBGRADE	12	–	COMPACTED TO AT LEAST 100 PERCENT OF STANDARD PROCTOR MAXIMUM DRY DENSITY (AASHTO T99)

TYPE III PAVEMENT SECTION: AVERAGE DAILY TRAFFIC (ADT) – 18000 & 24000 VPD (4 LANE COLLECTOR & 5 LANE ARTERIAL STREETS)				
	MATERIAL TYPE	TOTAL THICKNESS (INCHES)	MAX LIFT THICKNESS (INCHES)	NOTES
A	12.5 mm SUPERPAVE	1.5	2.5*	*ALLOW UP TO 4 INCHES THICK FOR DRIVEWAY AND SIDE ROAD TRANSITION
B	19 mm SUPERPAVE	3	3*	*ALLOW UP TO 6 INCHES PER LIFT FOR TRENCH WIDENING
C	25 mm SUPERPAVE	5	5*	*ALLOW UP TO 6 INCHES PER LIFT FOR TRENCH WIDENING
D	GRADED AGGREGATE BASE	12	6	COMPACTED TO 100 PERCENT OF THE MODIFIED PROCTOR MAXIMUM DRY DENSITY (AASHTO T180)
E	UPPER 12 INCHES SOIL SUBGRADE	12	–	COMPACTED TO AT LEAST 100 PERCENT OF STANDARD PROCTOR MAXIMUM DRY DENSITY (AASHTO T99)

PAVEMENT NOTES:
1. PROOF-ROLLING OF BOTH THE SUBGRADE AND G.A.B. MUST BE CONDUCTED WITH A GEOTECHNICAL ENGINEER PRESENT. CITY INSPECTOR MUST ALSO BE PRESENT AND SHOULD BE CONTACTED 72 HOURS IN ADVANCE AT 678-297-6200.
2. COPIES OF THE GEOTECHNICAL ENGINEER'S REPORT (INCLUDING COMPACTION TEST RESULTS) ARE REQUIRED TO BE PROVIDED TO THE CITY INSPECTOR. ALL REPORTS MUST BEAR THE SEAL AND SIGNATURE OF A GEORGIA REGISTERED PROFESSIONAL ENGINEER. COMPACTION TESTS ARE REQUIRED AT A MINIMUM OF EVERY 50 LINEAR FEET IN STAGGERED LOCATIONS AND AT ALL UTILITY CROSSINGS.
3. CORE SAMPLES ARE REQUIRED AT A MINIMUM OF EVERY 100 LINEAR FEET OF ROADWAY AND AT ALL UTILITY CROSSINGS. ADDITIONAL CORE SAMPLES MAY BE REQUIRED BY THE CITY INSPECTOR BASED ON FIELD CONDITIONS AND OBSERVATIONS. CORE SAMPLE RESULTS (INCLUDING LIFT THICKNESS AND COMPACTION VALUES FOR ASPHALT AND GAB) ARE REQUIRED TO BE PROVIDED TO THE CITY INSPECTOR.

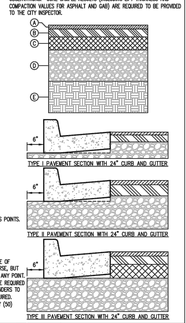

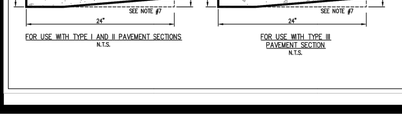

FOR USE WITH TYPE I AND II PAVEMENT SECTIONS N.T.S.

FOR USE WITH TYPE III PAVEMENT SECTION N.T.S.

CURB AND GUTTER NOTES:
1. ½" PRE-FORMED EXPANSION JOINTS REQUIRED AT ALL STRUCTURES AND RADIUS POINTS.
2. 50' MAXIMUM DISTANCE BETWEEN EXPANSION JOINTS.
3. 10' MAXIMUM DISTANCE BETWEEN CONTRACTION JOINTS.
4. CONCRETE STRENGTH TO BE 3000 P.S.I. WITH A MAXIMUM SLUMP OF 3".
5. CONCRETE FINISH SHALL BE SMOOTHED AND EVENED WITH A WOODEN FLOAT.
6. G.A.B. SHALL EXTEND A MINIMUM OF 6" BEYOND BACK OF CURB.
7. AT CONTRACTOR'S OPTION, THE GUTTER THICKNESS MAY BE INCREASED AT EDGE OF PAVEMENT TO MAKE BOTTOM OF GUTTER PARALLEL WITH PAVING OF BASE COURSE, BUT THE GUTTER THICKNESS MUST NOT BE LESS THAN THE SPECIFIED 6" OR 8" AT ANY POINT.
8. DURING CONSTRUCTION, THE CONTRACTOR'S MATERIALS TESTING AGENCY WILL BE REQUIRED TO PREPARE TEST CYLINDERS AND PROVIDE THE BREAK RESULTS OF SAID CYLINDERS TO THE CITY INSPECTOR. A MINIMUM OF ONE (1) SET PER POUR PER DAY IS REQUIRED. POURS IN EXCESS OF FIFTY (50) CUBIC YARDS REQUIRE ONE (1) SET PER FIFTY (50) CUBIC YARDS OR FRACTION THEREOF.

CITY OF ALPHARETTA GEORGIA

ROADWAY PAVEMENT SPECIFICATIONS, CURB AND GUTTER DETAILS

08/01/2015

STD. 901

BY	REVISION	DATE

BLUE LANDWORKS
CONSULTING ENGINEERS & SURVEYORS
LICENSE # PEF005518
LICENSE # LSF001044
5019 WEST BROAD STREET
SUITE M230
SUGAR HILL, GEORGIA 30518
TELEPHONE: (678) 804-8586
INFO@BLUELANDWORKS.COM
WWW.BLUELANDWORKS.COM

PREPARED FOR:
VILLAGE PARK SENIOR LIVING, LLC
1180 PEACHTREE ST NE SUITE 1700
ATLANTA, GA 30326
PHONE: 678 677-8600
CONTACT: BRYAN ROBINSON
EMAIL: bryan@bparkliving.com

GEORGIA REGISTERED PROFESSIONAL ENGINEER No. 27067 JONATHAN H. NIESOL

ISSUE #	DATE	REVISIONS
1	10/12/2021	SUBMIT FOR REVIEW

VILLAGE PARK MILTON
PHASE TWO
11940 ALPHARETTA HIGHWAY

PARCEL(S) 12-2340060056
CITY OF ALPHARETTA
LAND LOT 600, 1ST DISTRICT
FULTON COUNTY, GA
DRAWN: CC
CHECKED: JN

DETAILS

PROJECT# 2019.099

C-172

X:\2019-099 - 11940 Alpharetta Hwy\1000 - AutoCAD\30 - Construction\2019.099 VP Milton_DETAILS.dwg, C-172 10/7/2021 4:08 PM by Grant Crowe

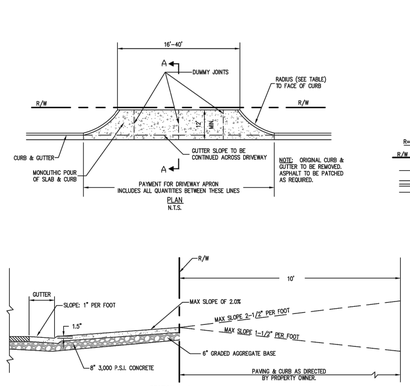

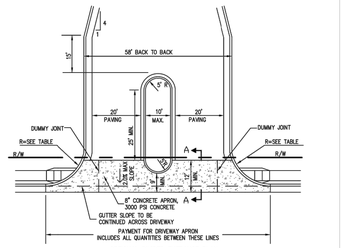

DRIVEWAY RADII (MIN)

INDUSTRIAL & COMMERICAL		LIGHT COMMERCIAL	
WIDTH	RADIUS	WIDTH	RADIUS
20' - 40'	25'	20' - 30'	25'
		30' - 40'	15'

NOTE:
RESIDENTIAL DRIVEWAYS SHALL COMPLY WITH GEORGIA DEPARTMENT OF TRANSPORTATION SPECIAL DETAIL A1.

ALPHARETTA GEORGIA — DRIVEWAY DETAILS — 08/01/2015 — STD. 951

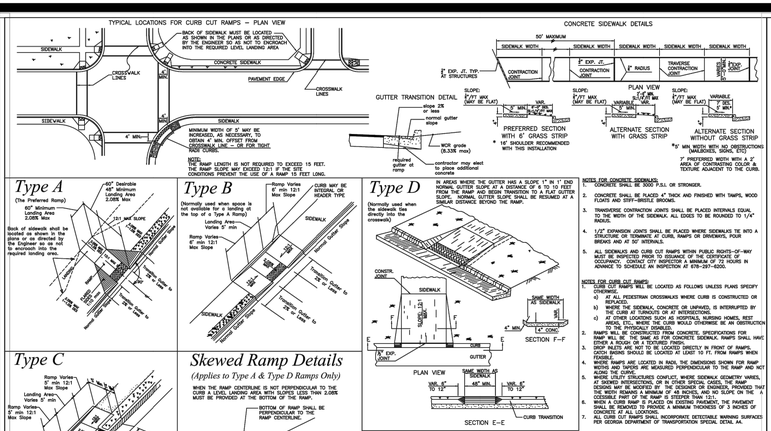

ALPHARETTA GEORGIA — CONCRETE SIDEWALK DETAILS, CURB CUT RAMP DETAILS — 08/01/2015 — STD. 902

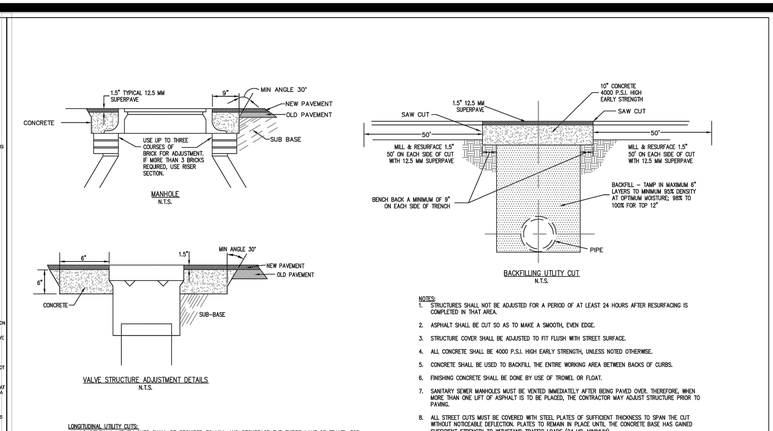

LONGITUDINAL UTILITY CUTS:
ALL LONGITDINAL UTILITY CUTS SHALL BE REQUIRED TO MILL AND RESURFACE THE ENTIRE LANE OF TRAVEL FOR THE LENGTH OF THE TRENCH PLUS 50' ON EACH END OF THE TRENCH. LONGITDINAL UTILITY TRENCHES ALONG THE CENTERLINE OF A ROADWAY SHALL BE REQUIRED TO MILL AND RESURFACE BOTH TRAVEL LANES FOR THE LENGTH OF THE TRENCH PLUS 50' ON EACH END OF THE TRENCH. THE REQUIRED DEPTH OF MILLING SHALL BE 1.5" AND RESURFACING SHALL BE PERFORMED WITH 12.5 MM SUPERPAVE.

NOTES:
1. STRUCTURES SHALL NOT BE ADJUSTED FOR A PERIOD OF AT LEAST 24 HOURS AFTER RESURFACING IS COMPLETED IN THAT AREA.
2. ASPHALT SHALL BE CUT SO AS TO MAKE A SMOOTH, EVEN EDGE.
3. STRUCTURE COVER SHALL BE ADJUSTED TO FIT FLUSH WITH STREET SURFACE.
4. ALL CONCRETE SHALL BE 4000 P.S.I. HIGH EARLY STRENGTH, UNLESS NOTED OTHERWISE.
5. CONCRETE SHALL BE USED TO BACKFILL THE ENTIRE WORKING AREA BETWEEN BACKS OF CURBS.
6. FINISHING CONCRETE SHALL BE DONE BY USE OF TROWEL OR FLOAT.
7. SANITARY SEWER MANHOLES MUST BE VENTED IMMEDIATELY AFTER BEING PAVED OVER. THEREFORE, WHEN MORE THAN ONE LIFT OF ASPHALT IS TO BE PLACED, THE CONTRACTOR MAY ADJUST STRUCTURE PRIOR TO PAVING.
8. ALL STREET CUTS MUST BE COVERED WITH STEEL PLATES OF SUFFICIENT THIDNESS TO SPAN THE CUT WITHOUT NOTICEABLE DEFLECTION. PLATES TO REMAIN IN PLACE UNTIL THE CONCRETE BASE HAS GAINED SUFFICIENT STRENGTH TO WITHSTAND TRAFFIC LOADS (24 HR. MINIMUM).

ALPHARETTA GEORGIA — UTILITY CUT STRUCTURE ADJUSTMENT — 08/01/2015 — STD. 401

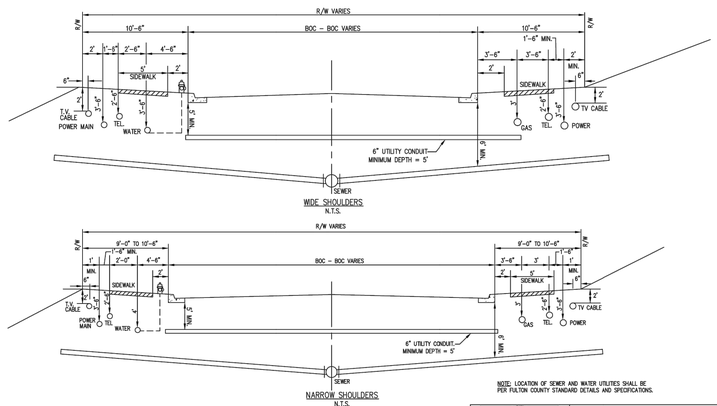

NOTE: LOCATION OF SEWER AND WATER UTILITIES SHALL BE PER FULTON COUNTY STANDARD DETAILS AND SPECIFICATIONS.

ALPHARETTA GEORGIA — TYPICAL UNDERGROUND UTILITY CROSS SECTION — 08/01/2015 — STD. 400

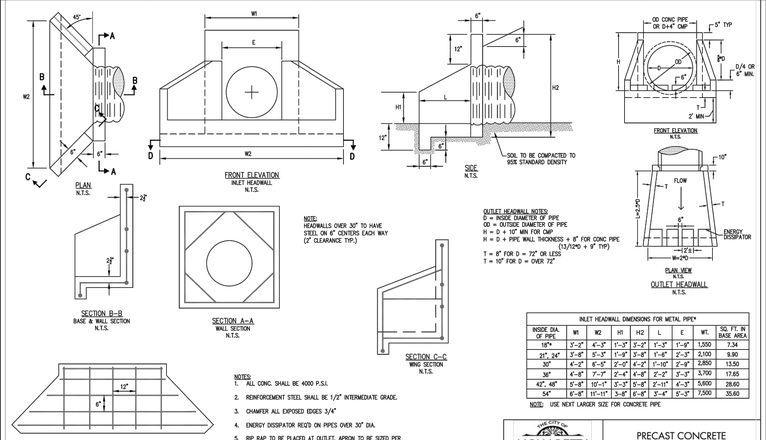

NOTE:
HEADWALLS OVER 30" TO HAVE STEEL ON 6" CENTERS EACH WAY (2" CLEARANCE TYP.)

NOTES:
1. ALL CONC. SHALL BE 4000 P.S.I.
2. REINFORCEMENT STEEL SHALL BE 1/2" INTERMEDIATE GRADE.
3. CHAMFER ALL EXPOSED EDGES 3/4"
4. ENERGY DISSIPATOR REQ'D ON PIPES OVER 30" DIA.
5. RIP RAP TO BE PLACED AT OUTLET, APRON TO BE SIZED PER GEORGIA MANUAL FOR EROSION & SEDIMENT CONTROL.
6. FOR PIPES LARGER THAN 54" USE GDOT STD. #5330P AND #5339P.
7. ALL OPEN DRAINAGE SWALES MUST BE DRESSED PER GEORGIA MANUAL FOR EROSION & SEDIMENT CONTROL.

INLET HEADWALL DIMENSIONS FOR METAL PIPE*

INSIDE DIA. OF PIPE	W1	W2	H1	H2	L	E	WT.	SQ. FT. IN BASE AREA
18"*	3'-2"	4'-3"	1'-3"	2'-2"	1'-9"	1'-9"	1,550	7.34
21", 24"	3'-8"	5'-3"	1'-9"	3'-8"	1'-6"	2'-3"	2,100	9.90
30"	4'-2"	6'-5"	2'-0"	4'-2"	1'-10"	2'-9"	2,850	13.50
36"	4'-8"	7'-7"	2'-4"	4'-8"	2'-2"	3'-3"	3,700	17.65
42", 48"	5'-8"	10'-1"	2'-3"	5'-8"	2'-11"	4'-3"	5,600	28.60
54"	6'-8"	11'-11"	3'-8"	6'-8"	3'-4"	5'-3"	7,500	35.60

NOTE: USE NEXT LARGER SIZE FOR CONCRETE PIPE

ALPHARETTA GEORGIA — PRECAST CONCRETE HEADWALL SYSTEM — 08/01/2015 — STD. 232

BRICK DROP INLET (STD. 210)

D	W1	MIN.–W2	W3	a	b	MIN–H
18"	2'-2"	3'-2 1/2"	2'-9"	0'-4 1/2"	0'-8"	4'-1"
24"	2'-8"	3'-3"	3'-3"	0'-7 1/2"	1'-1 1/4"	4'-9"
30"	3'-7 1/4"	4'-0"	3'-10"	1'-0"	1'-9"	5'-10"
36"	4'-2"	6'-0 1/2"	4'-9"	1'-4 1/2"	2'-2 1/4"	6'-11"
42"	4'-5"	7'-1 3/4"	5'-0"	1'-6"	2'-7 1/4"	8'-0 1/4"
48"	5'-0"	8'-2 3/4"	5'-7"	1'-9 1/2"	3'-1 1/4"	9'-1 1/4"
54"	5'-7"	9'-4"	6'-2"	2'-1"	3'-7 1/2"	10'-2 1/2"
60"	6'-2"	10'-5"	6'-9"	2'-4 1/2"	4'-1 1/2"	11'-3 1/4"
66"	6'-9"	11'-6"	7'-4"	2'-8"	4'-7 1/2"	12'-4 1/4"
72"	7'-4"	12'-7 1/2"	7'-11"	2'-11 1/2"	5'-2"	13'-5 1/2"

NOTE:
MAXIMUM VERTICAL DEPTH FOR DROP INLET – H=15'-0"

CONCRETE DROP INLET (STD. 211)

	TYPE A						TYPE B		
D	W1	MIN.–W2	W3	a	b	MIN–H	NORMAL W OR W1	MIN–h	MIN–H
18"	2'-0"	2'-9 1/2"	2'-7"	0'-3 1/2"	0'-8"	3'-8"	2'-3"	2'-10"	4'-0"
24"	2'-8"	4'-0 1/2"	3'-3"	0'-7 1/2"	1'-1"	4'-9"	3'-0"	3'-8"	4'-10"
30"	3'-4"	5'-1 1/2"	3'-11"	0'-11 1/2"	1'-8"	5'-10"	3'-6 1/2"	4'-2 1/2"	5'-4 1/2"
36"	3'-10"	6'-1 1/2"	4'-5"	1'-2 1/2"	2'-1 1/4"	6'-10"	4'-0"	4'-10"	6'-0"
42"	4'-5"	7'-2 1/2"	5'-0"	1'-6"	2'-7 1/2"	7'-11"	4'-8 1/2"	5'-4 1/2"	6'-6 1/2"
48"	5'-0"	8'-3 1/2"	5'-7"	1'-9 1/2"	3'-1 1/4"	9'-0"	5'-3 1/2"	5'-11 1/2"	7'-1 1/2"
54"	5'-7"	9'-4 1/2"	6'-2"	2'-1"	3'-7 1/4"	10'-1"	5'-10"	6'-6"	7'-8"
60"	6'-2"	10'-5 1/2"	6'-9"	2'-4 1/2"	4'-1 1/2"	11'-2"	6'-4 1/2"	7'-0 1/2"	8'-2 1/7"
66"	6'-9"	11'-6 1/2"	7'-4"	2'-8"	4'-7 1/2"	12'-3"	6'-11"	7'-7"	8'-9"
72"	7'-4"	12'-7 1/2"	7'-11"	2'-11 1/2"	5'-1 1/4"	13'-4"	7'-5 1/2"	8'-1 1/2"	9'-3"

ALPHARETTA GEORGIA — DROP INLET DIMENSIONS — 08/01/2015 — STD. 213

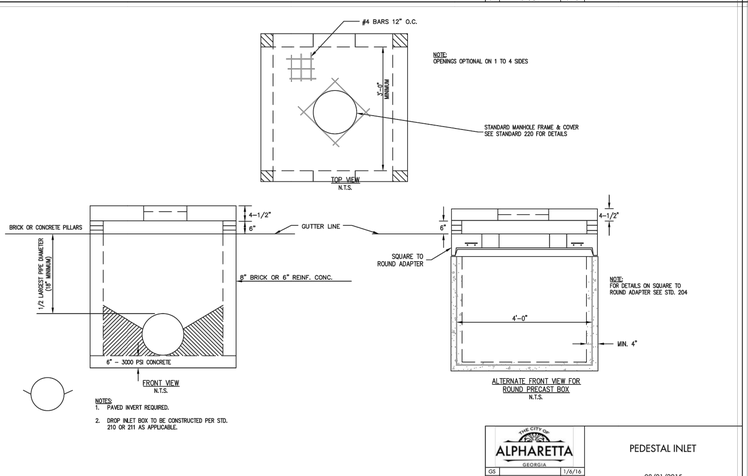

NOTES:
1. PAVED INVERT REQUIRED.
2. DROP INLET BOX TO BE CONSTRUCTED PER STD. 210 OR 211 AS APPLICABLE.

ALPHARETTA GEORGIA — PEDESTAL INLET — 08/01/2015 — STD. 212

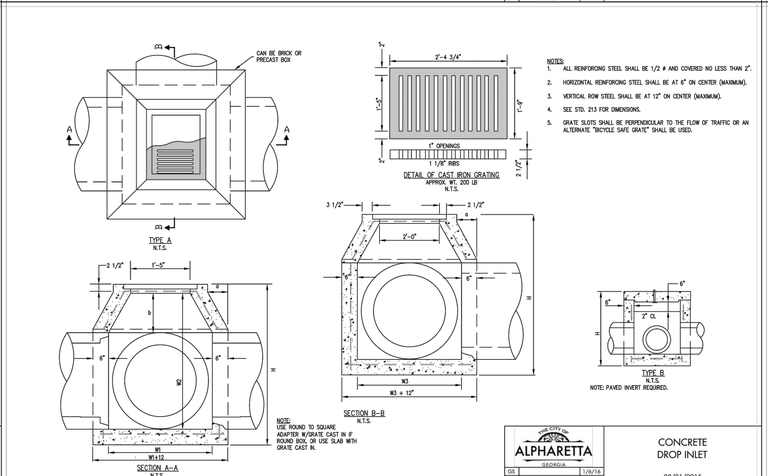

NOTES:
1. ALL REINFORCING STEEL SHALL BE 1/2 # AND COVERED NO LESS THAN 2".
2. HORIZONTAL REINFORCING STEEL SHALL BE 6" ON CENTER (MAXIMUM).
3. VERTICAL ROW STEEL SHALL BE AT 12" ON CENTER (MAXIMUM).
4. SEE STD. 213 FOR DIMENSIONS.
5. GRATE SLOTS SHALL BE PERPENDICULAR TO THE FLOW OF TRAFFIC OR AN ALTERNATE "BICYCLE SAFE GRATE" SHALL BE USED.

NOTE: USE ROUND TO SQUARE ADAPTER W/GRATE CAST IN IF ROUND BOX, OR USE SLAB WITH GRATE CAST IN.

NOTE: PAVED INVERT REQUIRED.

ALPHARETTA GEORGIA — CONCRETE DROP INLET — 08/01/2015 — STD. 211

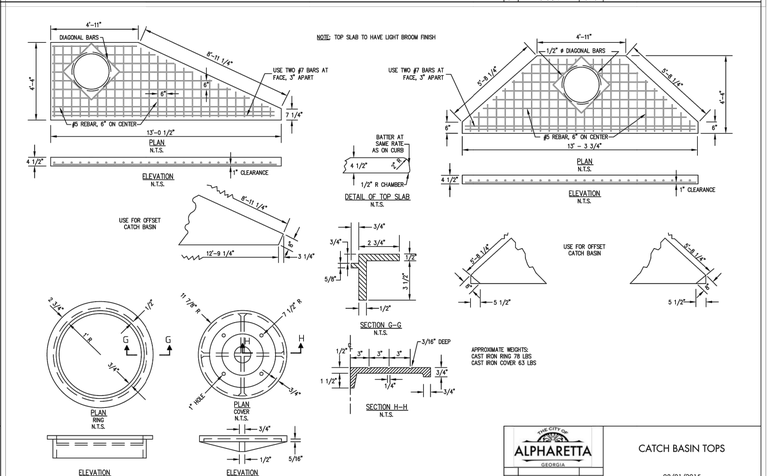

ALPHARETTA GEORGIA — CATCH BASIN TOPS — 08/01/2015 — STD. 205

BLUE LANDWORKS
CONSULTING ENGINEERS & SURVEYORS
LICENSE # PE000551B
LICENSE # LSF001044
5019 WEST BROAD STREET
SUITE M230
SUGAR HILL, GEORGIA 30518
TELEPHONE: (678) 804-8586
INFO@BLUELANDWORKS.COM
WWW.BLUELANDWORKS.COM

PREPARED FOR:
VILLAGE PARK SENIOR LIVING, LLC
1100 CROSS KEYS OFFICE SUITE 1100
ATLANTA, GA 30326
PHONE: 678 677-8600
CONTACT: BRYAN DUNCAN
EMAIL: bryan@bpardevelop.com

GEORGIA REGISTERED No. 27087 PROFESSIONAL ENGINEER JONATHAN H. NILSOL

ISSUE #	DATE	REVISIONS
1	10/12/2021	SUBMIT FOR REVIEW

VILLAGE PARK MILTON
PHASE TWO
11940 ALPHARETTA HIGHWAY

PARCEL(S) 12-2340060006
CITY OF ALPHARETTA
LAND LOT 600, 1ST DISTRICT
FULTON COUNTY, GA
DRAWN: CC
CHECKED: JN

DETAILS

PROJECT# 2019.099
C-173

V:\2019-099 - 11940 Alpharetta Hwy\1000 - AutoCAD\30 - Construction\2019.099 BP Milton_DETAILS.dwg, C-173 10/7/2021 4:00 PM by Grant Crane

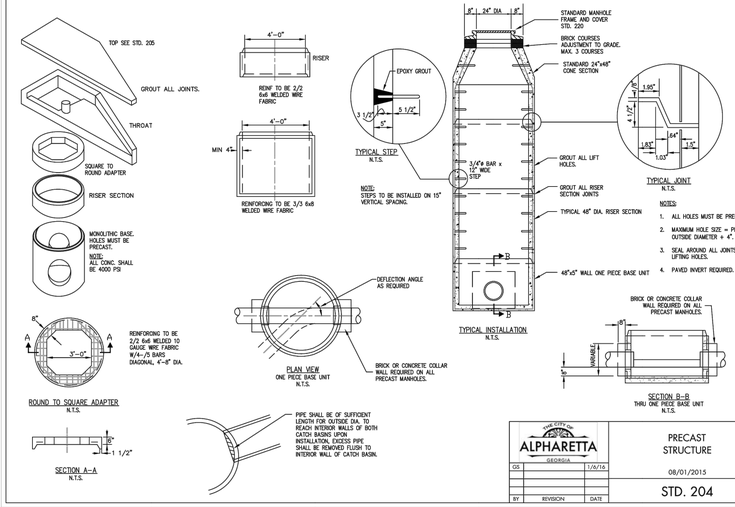

THE CITY OF ALPHARETTA GEORGIA

GS		7/6/16
BY	REVISION	DATE

PRECAST STRUCTURE

08/01/2015

STD. 204

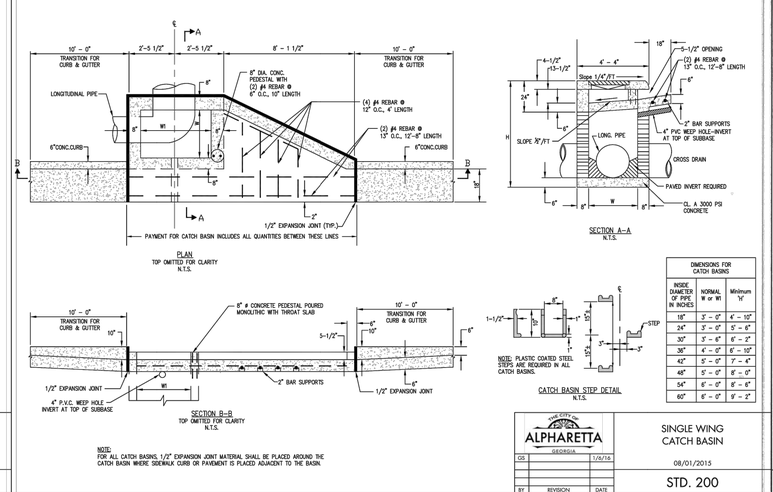

DIMENSIONS FOR CATCH BASINS		
INSIDE DIAMETER OF PIPE, IN INCHES	NORMAL 'W' or 'W1'	Minimum 'H'
18"	3' - 0"	4' - 10"
24"	3' - 0"	5' - 6"
30"	3' - 6"	6' - 2"
36"	4' - 0"	6' - 10"
42"	5' - 0"	7' - 4"
48"	5' - 0"	8' - 0"
54"	6' - 0"	8' - 6"
60"	6' - 0"	9' - 2"

NOTE: FOR ALL CATCH BASINS, 1/2" EXPANSION JOINT MATERIAL SHALL BE PLACED AROUND THE CATCH BASIN WHERE SIDEWALK CURB OR PAVEMENT IS PLACED ADJACENT TO THE BASIN.

THE CITY OF ALPHARETTA GEORGIA

GS		7/6/16
BY	REVISION	DATE

SINGLE WING CATCH BASIN

08/01/2015

STD. 200

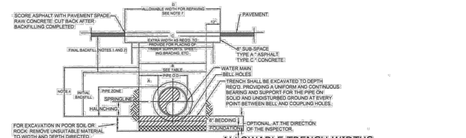

NOTES:
1. CONSTRUCTION BACKFILLS SHALL BE SHALL BE IN LAYERS AND EACH LAYER SHALL BE THOROUGHLY COMPACTED BEFORE BEGINNING ANOTHER LAYER. LAYERS SHALL BE NO MORE THAN 8" IN DEPTH. ROLLING WILL NOT BE PERMITTED WITHIN 3 FEET OF THE WET MATERIALS, PLACED IN TRENCHES.
2. COMPACTION STANDARDS: ALL BACKFILL MATERIALS USED SHALL CONTAIN SUFFICIENT MOISTURE FOR PROPER COMPACTION AND THESE MATERIALS SHALL BE COMPACTED AT NOT LESS THAN 95% OF THEIR OPTIMUM COMPACTION FOR ANY GIVEN LIFT. THE CLASSIFICATION IS DETERMINED BY THE MODIFIED PROCTOR TEST A STM-D698.
3. COMPACTION TESTS: COMPACTION TESTS MAY BE REQUIRED IN EXISTING OR PROPOSED ROADWAYS, EASEMENTS AREAS AND OTHER EXISTING OR PROPOSED PAVED AREAS AT VARYING DEPTHS AND AT INTERVALS AS DETERMINED BY THE ENGINEER WITH A MINIMUM OF ONE TEST PER 100 LINEAR FEET. ADDITIONAL REQUIRED TEST FOR EACH 400' OF LEVEL OF WATER MAIN CONSTRUCTION, UNLESS SOIL CONDITIONS OR CONSTRUCTION PRACTICES, IN THE OPINION OF THE ENGINEER, DEMONSTRATE THE NEED FOR ADDITIONAL TESTS.
4. NO BOULDERS OR LOOSE ROCKS PERMITTED IN THE BACKFILL AT THE BOTTOM OF PIPE TRENCH TO 2'-0" ABOVE PIPE.
5. ALL SEDIONS BASED ON FULLY COMPACTED BACKFILL AND UNIFORMLY SUPPORTED PIPE.
7. FOR PAVEMENT CUT REPAIRS SEE DRAWING 109.

ALLOWABLE TRENCH WIDTHS

PIPE SIZE (NOM)	A SIDE CLEARANCE INCH		B DITCH WIDTH INCH				C SHORING WIDTH (ADDITIONAL-INCH)	D. CUT REPAIR WIDTH FEET			
	SOIL	ROCK	SOIL		ROCK			SOIL		ROCK	
			MJ	SJ	MJ	SJ		MJ	SJ	MJ	SJ
3/4"-2"	2	6	NA	12	NA	14	AS APPROVED	NA	3.00	NA	3.17
4"	9	12	28	22	28	28	AS APPROVED	4.33	3.67	4.33	4.33
6"	9	12	30	24	30	30	AS APPROVED	4.50	4.00	4.50	4.50
8"	9	12	32	26	32	32	AS APPROVED	4.67	4.17	4.67	4.67
10"	9	12	34	28	34	34	AS APPROVED	4.83	4.33	4.83	4.83
12"	9	12	36	30	36	36	AS APPROVED	5.00	4.50	5.00	5.00
14"	9	12	38	32	38	38	AS APPROVED	5.17	4.67	5.17	5.17
16"	9	12	40	34	40	40	AS APPROVED	5.33	4.83	5.33	5.33
20"	9	12	44	38	44	44	AS APPROVED	5.67	5.17	5.67	5.67
24"	9	12	48	42	48	48	AS APPROVED	6.00	5.50	6.00	6.00
30"	9	12	54	48	54	54	AS APPROVED	6.50	6.00	6.50	6.50
36"	9	12	60	54	60	60	AS APPROVED	7.00	6.50	7.00	7.00
42"	9	12	66	60	66	66	AS APPROVED	7.50	7.00	7.50	7.50
48"	9	12	72	66	72	72	AS APPROVED	8.00	7.50	8.00	8.00

FULTON COUNTY STANDARD DETAIL 103
ALLOWABLE TRENCH WIDTHS

DATE	REVISIONS	DATE	REVISIONS
8/06	NRR		
1/17	TPM		

DGS/DRN/CHKD: CMS
APPROVED: REW
DATE: 12-2-05

FULTON COUNTY

FULTON COUNTY PUBLIC WORKS
141 PRYOR ST. ATLANTA, GA. 30303
404-612-7400 FAX: 404-224-0498

DRAWING NO. 103

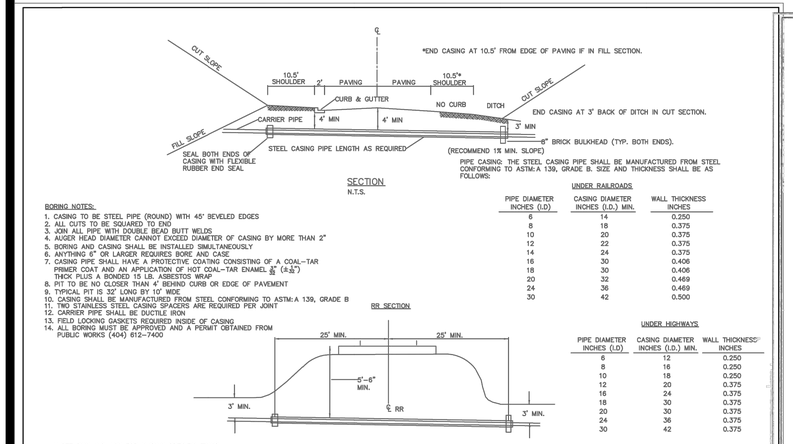

PIPE CASING: THE STEEL CASING PIPE SHALL BE MANUFACTURED FROM STEEL CONFORMING TO ASTM:A 139, GRADE B. SIZE AND THICKNESS SHALL BE AS FOLLOWS:

UNDER RAILROADS

PIPE DIAMETER INCHES (I.D)	CASING DIAMETER INCHES (I.D.) MIN.	WALL THICKNESS INCHES
8	14	0.250
8	18	0.375
10	20	0.375
12	22	0.375
14	24	0.375
16	30	0.406
18	30	0.406
20	32	0.469
24	36	0.469
30	42	0.500

UNDER HIGHWAYS

PIPE DIAMETER INCHES (I.D)	CASING DIAMETER INCHES (I.D.) MIN.	WALL THICKNESS INCHES
6	12	0.250
8	16	0.250
10	18	0.250
12	20	0.375
16	24	0.375
18	30	0.375
20	30	0.375
24	36	0.375
30	42	0.375

BORING NOTES:
1. CASING TO BE STEEL PIPE (ROUND) WITH 45° BEVELED EDGES
2. ALL CUTS TO BE SQUARED TO END
3. JOIN ALL PIPE WITH DOUBLE BEAD BUTT WELDS
4. AUGER HEAD DIAMETER CANNOT EXCEED DIAMETER OF CASING BY MORE THAN 2"
5. BORING AND CASING SHALL BE INSTALLED SIMULTANEOUSLY
6. ANYTHING 6" OR LARGER REQUIRES BORE AND CASE
7. CASING PIPE SHALL HAVE A PROTECTIVE COATING CONSISTING OF A COAL-TAR PRIMER COAT AND AN APPLICATION OF HOT COAL-TAR ENAMEL, $\frac{1}{16}$" ($\pm\frac{1}{32}$") THICK PLUS A BONDED 15 LB. ASBESTOS WRAP
8. PIT TO BE NO CLOSER THAN 4' BEHIND CURB OR EDGE OF PAVEMENT
9. TYPICAL PIT IS 32' LONG BY 10' WIDE
10. CASING SHALL BE MANUFACTURED FROM STEEL CONFORMING TO ASTM:A 139, GRADE B
11. TWO STAINLESS STEEL CASING SPACERS ARE REQUIRED PER JOINT
12. CARRIER PIPE SHALL BE DUCTILE IRON
13. FIELD LOOKING GASKETS REQUIRED INSIDE OF CASING
14. ALL BORING MUST BE APPROVED AND A PERMIT OBTAINED FROM PUBLIC WORKS (404) 612-7400

RR SECTION

* SEE DWG. NO. 129 FOR CASING SPECIFICATIONS

FULTON COUNTY STANDARD DETAIL 107
ROADWAY CROSSING
BORE AND CASE DETAIL

DATE	REVISIONS	DATE	REVISIONS
8/06	NRR		

DGS/DRN/CHKD: CMS
APPROVED: REW
DATE: 12-2-05

FULTON COUNTY

FULTON COUNTY PUBLIC WORKS
141 PRYOR ST. ATLANTA, GA. 30303
404-612-7400 FAX: 404-224-0498

DRAWING NO. 107

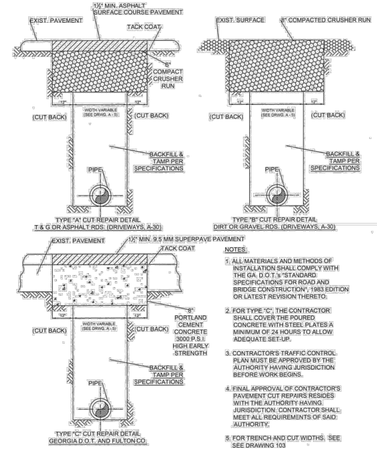

NOTES:
1. ALL MATERIALS AND METHODS OF INSTALLATION SHALL COMPLY WITH THE GA. D.O.T.'s "STANDARD SPECIFICATIONS FOR ROAD AND BRIDGE CONSTRUCTION", 1993 EDITION OR LATEST REVISION THERETO.
2. FOR TYPE "C", THE CONTRACTOR SHALL COVER THE POURED CONCRETE WITH STEEL PLATES A MINIMUM OF 24 HOURS TO ALLOW ADEQUATE SET-UP.
3. CONTRACTOR'S TRAFFIC CONTROL PLAN MUST BE APPROVED BY THE AUTHORITY HAVING JURISDICTION BEFORE WORK BEGINS.
4. FINAL APPROVAL OF CONTRACTOR'S PAVEMENT CUT REPAIRS RESIDES WITH THE AUTHORITY HAVING JURISDICTION. CONTRACTOR SHALL MEET ALL REQUIREMENTS OF SAID AUTHORITY.
5. FOR TRENCH AND CUT WIDTHS, SEE DRAWING 103

FULTON COUNTY STANDARD DETAIL 109
PAVEMENT CUT REPAIRS/STANDARD UTILITY CUT
TYPE A, B & C

DATE	REVISIONS	DATE	REVISIONS
8/06	NRR		
1/17	TPM		

DGS/DRN/CHKD: CMS
APPROVED: REW
DATE: 12-2-05

FULTON COUNTY

FULTON COUNTY PUBLIC WORKS
141 PRYOR ST. ATLANTA, GA. 30303
404-612-7400 FAX: 404-224-0498

DRAWING NO. 109

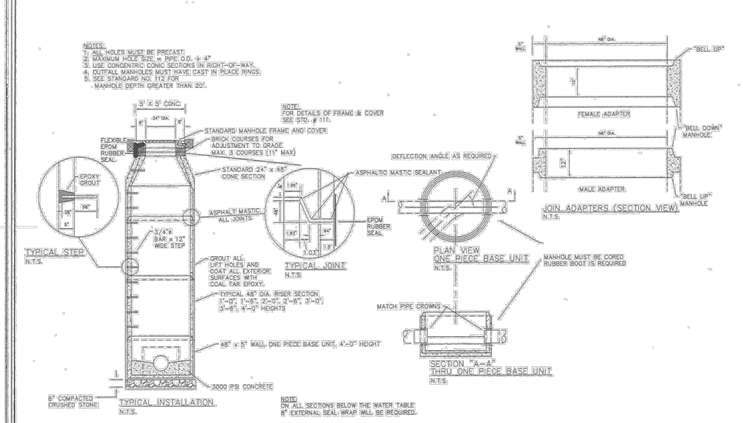

FULTON COUNTY STANDARD DETAIL 113
MANHOLES
PRECAST DETAILS

DATE	REVISIONS	DATE	REVISIONS
8/06	NRR		
1/17	TPM		

DGS/DRN/CHKD: REB
APPROVED: REW
DATE: 12-2-05

FULTON COUNTY

FULTON COUNTY PUBLIC WORKS
141 PRYOR ST. ATLANTA, GA. 30303
404-612-7400 FAX: 404-224-0498

DRAWING NO. 113

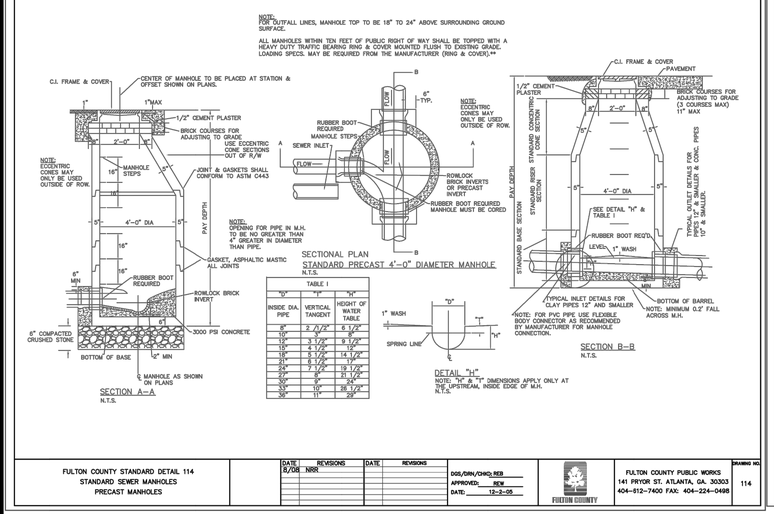

TABLE I

"D"	"T"	"H"
INSIDE DIA. PIPE	VERTICAL TANGENT	HEIGHT OF WATER TABLE
8"	2 /12"	6 1/2"
10"	3 1/2"	9 1/2"
12"	4 1/2"	12 1/2"
15"	6 1/2"	14 1/2"
18"	8 1/2"	14 1/2"
21"	9 1/2"	16 1/2"
24"	7 1/2"	19 1/2"
27"	8"	21 1/2"
30"	9"	24"
33"	10"	26 1/2"
36"	11"	29"

FULTON COUNTY STANDARD DETAIL 114
STANDARD SEWER MANHOLES
PRECAST MANHOLES

DATE	REVISIONS	DATE	REVISIONS
8/06	NRR		

DGS/DRN/CHKD: REB
APPROVED: REW
DATE: 12-2-05

FULTON COUNTY

FULTON COUNTY PUBLIC WORKS
141 PRYOR ST. ATLANTA, GA. 30303
404-612-7400 FAX: 404-224-0498

DRAWING NO. 114

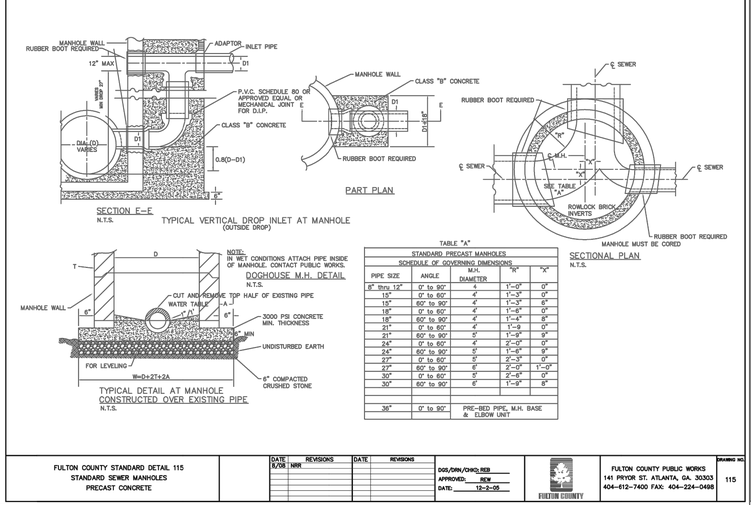

TABLE "A"

STANDARD PRECAST MANHOLES
SCHEDULE OF GOVERNING DIMENSIONS

PIPE SIZE	ANGLE	M.H. DIAMETER	"R"	"X"
8" thru 12"	0° to 90°	4'	1'-0"	0"
15"	0° to 60°	4'	1'-3"	0"
15"	60° to 90°	4'	1'-3"	6"
18"	0° to 60°	4'	1'-6"	0"
18"	60° to 90°	4'	1'-6"	8"
21"	0° to 60°	4'	1'-9	0"
21"	60° to 90°	5'	1'-9"	9"
24"	0° to 60°	4'	2'-0"	0"
24"	60° to 90°	5'	1'-6"	9"
27"	0° to 60°	5'	2'-0"	0"
27"	60° to 90°	6'	2'-0"	1'-0"
30"	0° to 60°	5'	2'-6"	0"
30"	60° to 90°	6'	1'-9"	6"
36"	0° to 90°	PRE-BED PIPE, M.H. BASE & ELBOW UNIT		

FULTON COUNTY STANDARD DETAIL 115
STANDARD SEWER MANHOLES
PRECAST CONCRETE

DATE	REVISIONS	DATE	REVISIONS
8/06	NRR		

DGS/DRN/CHKD: REB
APPROVED: REW
DATE: 12-2-05

FULTON COUNTY

FULTON COUNTY PUBLIC WORKS
141 PRYOR ST. ATLANTA, GA. 30303
404-612-7400 FAX: 404-224-0488

DRAWING NO. 115

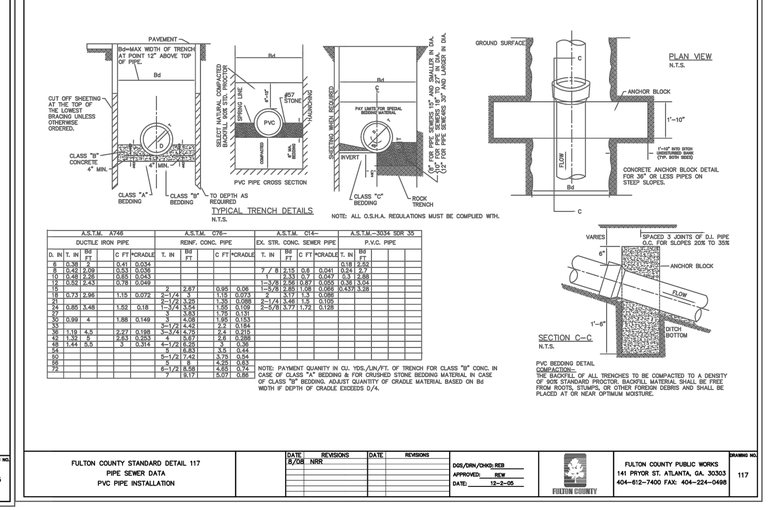

A.S.T.M. A746 DUCTILE IRON PIPE					A.S.T.M. C76- REINF. CONC. PIPE				A.S.T.M. C14- EX. STR. CONC. SEWER PIPE				A.S.T.M.-3034 SDR 35 P.V.C. PIPE			
D. IN	T. IN	Bd FT	C FT	CRADLE	T. IN	Bd FT	C FT	CRADLE	T. IN	Bd FT	C FT	CRADLE	T. IN	Bd FT		
6	0.38	3	0.41	0.034									0.18	2.52		
8	0.42	2.69	0.51	0.036					7 / 8	2.15	0.6	0.041	0.24	2.7		
10	0.48	2.26	0.63	0.043						3.33	0.7	0.047	0.3	3.08		
12	0.52	2.43	0.78	0.049					1-3/4	3.75	0.8	0.055	0.33	3.38		
15					3	2.87	0.95	0.06	1-3/4	3.75	1.0	0.065	0.43	3.38		
18	0.73	2.95	1.15	0.072	3-1/4	3.25	1.15	0.073	2	4.17	1.3	0.08				
21	0.83	3.48	1.52	0.18	3-1/4	3.54	1.25	0.086	2-1/4	4.46	1.5	0.105				
24	0.85	3.48	1.52	0.18	3-1/4	3.54	1.25	0.109	2-5/8	4.77	1.72	0.128				
27					3	3.93	1.79	0.131								
30	0.99	4	1.88	0.149	3	4.08	1.95	0.153								
33					3-1/2	4.42	2.2	0.184								
36	1.19	4.5	2.27	0.185	3-1/4	4.75	2.4	0.215								
42	1.31	5	2.93	0.253	4	5.25	2.8	0.298								
48	1.44	5.5	3	0.314	4-1/2	5.81	3.3	0.38								
54					5	6.83	3.5	0.44								
60					5-1/2	7.42	3.75	0.54								
66					6	8.02	4.25	0.63								
72					6-1/2	8.58	4.65	0.72								
					7	9.17	5.07	0.86								

NOTE: PAYMENT QUANTY IN CU. YDS./LIN/FT. OF TRENCH FOR CLASS "B" CONC. IN CASE OF CLASS "A" BEDDING & FOR CRUSHED STONE BEDDING MATERIAL IN CASE OF CLASS "B" BEDDING. ADJUST QUANTITY OF CRADLE MATERIAL BASED ON Bd WIDTH IF DEPTH OF CRADLE EXCEEDS D/4.

FULTON COUNTY STANDARD DETAIL 117
PIPE SEWER DATA
PVC PIPE INSTALLATION

DATE	REVISIONS	DATE	REVISIONS
8/06	NRR		

DGS/DRN/CHKD: REB
APPROVED: REW
DATE: 12-2-05

FULTON COUNTY

FULTON COUNTY PUBLIC WORKS
141 PRYOR ST. ATLANTA, GA. 30303
404-612-7400 FAX: 404-224-0498

DRAWING NO. 117

BLUE LANDWORKS
CONSULTING ENGINEERS & SURVEYORS
LICENSE # PE F000518
LICENSE # LSF001044
5019 WEST BROAD STREET
SUITE M230
SUGAR HILL, GEORGIA 30518
TELEPHONE: (678) 804-8586
INFO@BLUELANDWORKS.COM
WWW.BLUELANDWORKS.COM

PREPARED FOR:
VILLAGE PARK SENIOR LIVING, LLC
1180 PEACHTREE STREET, SUITE 1700
ATLANTA, GA 30309
PHONE: 678 677-8600
CONTACT: BRYAN THOMPSON
EMAIL: bryan@gardenliving.com

GEORGIA REGISTERED PROFESSIONAL ENGINEER No. 27057 JONATHAN H. NIXOL

ISSUE #	DATE	REVISIONS
1	10/12/2021	SUBMIT FOR REVIEW

VILLAGE PARK MILTON
PHASE TWO
11940 ALPHARETTA HIGHWAY

PARCEL(S) 12-2340060056
CITY OF ALPHARETTA
LAND LOT 600, 1ST DISTRICT
FULTON COUNTY, GA
DRAWN: CC
CHECKED: JN

DETAILS

PROJECT# 2019.099

C-174

X:\2019-099 - 11940 Alpharetta Hwy\1000 - AutoCAD\30 - Construction\2019.099 VP Milton_DETAILS.dwg, C-174, 10/7/2021 4:08 PM by Grant Crose

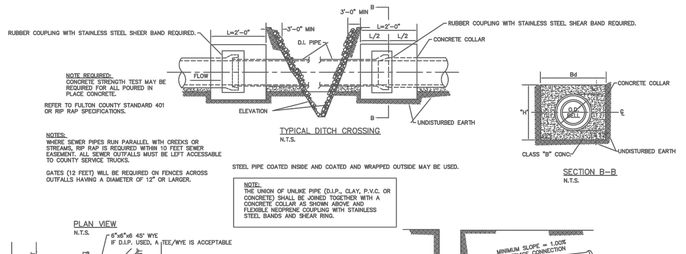

NOTE REQUIRED:
CONCRETE STRENGTH TEST MAY BE REQUIRED FOR ALL POURED IN PLACE CONCRETE.

REFER TO FULTON COUNTY STANDARD 401 OR RIP RAP SPECIFICATIONS.

NOTES:
WHERE SEWER PIPES RUN PARALLEL WITH CREEKS OR STREAMS, RIP RAP IS REQUIRED WITHIN 10 FEET SEWER EASEMENT. ALL SEWER OUTFALLS MUST BE LEFT ACCESSABLE TO COUNTY SERVICE TRUCKS.

GATES (12 FEET) WILL BE REQUIRED ON FENCES ACROSS OUTFALLS HAVING A DIAMETER OF 12" OR LARGER.

TYPICAL DITCH CROSSING
N.T.S.

STEEL PIPE COATED INSIDE AND COATED AND WRAPPED OUTSIDE MAY BE USED.

NOTE:
THE UNION OF UNLIKE PIPE (D.I.P., CLAY, P.V.C. OR CONCRETE) SHALL BE JOINED TOGETHER WITH A CONCRETE COLLAR, SHOWN ABOVE, AND FLEXIBLE NEOPRENE COUPLING WITH STAINLESS STEEL BANDS AND SHEAR RING.

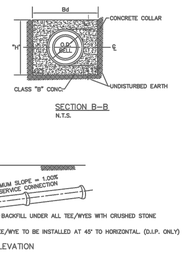

SECTION B–B
N.T.S.

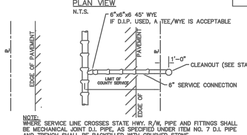

NOTE:
WHERE SERVICE LINE CROSSES STATE HWY. R/W, PIPE AND FITTINGS SHALL BE MECHANICAL JOINT D.I. PIPE, AS SPECIFIED UNDER ITEM NO. 7 D.I. PIPE AND TRENCH SHALL BE BACKFILLED WITH CRUSHED STONE.

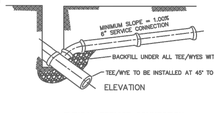

TYPICAL SERVICE CONNECTION
N.T.S.

FULTON COUNTY STANDARD DETAIL 118
PIPE SEWER DATA

DATE	REVISIONS	DATE	REVISIONS
8/08	NRR		

DGS/DRN/CHKD: REB
APPROVED: REW
DATE: 12-2-05

FULTON COUNTY PUBLIC WORKS
141 PRYOR ST. ATLANTA, GA. 30303
404-612-7400 FAX: 404-224-0498

DRAWING NO. 118

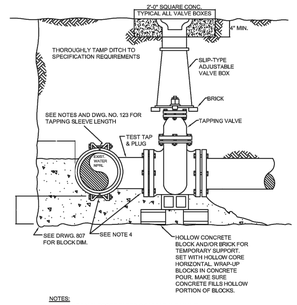

NOTES:
1. TEMPORARILY SUPPORT TAPPING SADDLE AND VALVE AND APPLY STANDARD HYDROSTATIC TEST.
2. IF NO LEAKS, POUR INDICATED PERMENANT CONCRETE BLOCK AND SUPPORT PAD.
3. MAKE TAP, LINE EXTENSION AND BACKFILL.
4. COVER GLANDS AND BOLTS WITH HEAVY POLYETHELENE SHEETING TO KEEP CONCRETE FROM BONDING. TYPICAL WHENEVER BOLTS OR GLANDS MAY BE "WRAPPED-UP" IN CONCRETE.
5. COAT TAPPING SLEEVE AND BOLTS WITH AN APPROVED BITUMASTIC COATING BEFORE POURING CONCRETE. TYPICAL FOR ALL STEEL INCLUDING RODS, COUPLINGS, STRAPS, AND OTHER BURIED STEEL. SEE NOTE 3, DRWG. 127 FOR COATING.

FULTON COUNTY STANDARD DETAIL 122
TAPPING SLEEVE AND VALVE INSTALLATION DETAILS

DATE	REVISIONS	DATE	REVISIONS

DGS/DRN/CHKD: CMS
APPROVED: REW
DATE: 12-2-05

FULTON COUNTY PUBLIC WORKS
141 PRYOR ST. ATLANTA, GA. 30303
404-612-7400 FAX: 404-224-0498

DRAWING NO. 122

MAXIMUM TAPPING SLEEVE LENGTH

MAIN & TAP (IN. NOMINAL)	LENGTH (ALONG RUN)
6x6, 6x3, 6x4, 6x2	18"
8x2, 8x3, 8x4, 8x6	19"
8x8	21"
10x2, 10x3, 10x4, 10x6	19"
10x8, 10x10	23"
12x2, 12x3, 12x5, 12x6	19"
12x8	21"
12x10, 12x12	25"

NOTES:
1. ALL TAPPING SLEEVES AND VALVES SHALL BE HYDROSTATICALLY TESTED PRIOR TO TAP
2. SEE DWG. NO. 122 FOR TAPPING SLEEVE INSTALLATION DETAILS
3. WORKMEN INSTALLING TAPPING SLEEVE AND VALVE SHALL FOLLOW MANUFACTURER'S INSTALLATION PROCEDURES AND THE REQUIRMENTS OF FULTON COUNTY ENGINEER'S OFFICE.

FULTON COUNTY STANDARD DETAIL 123
TAPPING SLEEVE LENGTH

DATE	REVISIONS	DATE	REVISIONS
8/08	NRR		

DGS/DRN/CHKD: CMS
APPROVED: REW
DATE: 12-2-05

FULTON COUNTY PUBLIC WORKS
141 PRYOR ST. ATLANTA, GA. 30303
404-612-7400 FAX: 404-224-0498

DRAWING NO. 123

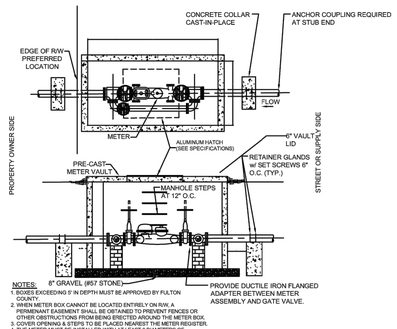

NOTES:
1. BOXES EXCEEDING 5' IN DEPTH MUST BE APPROVED BY FULTON COUNTY.
2. WHEN METER BOX CANNOT BE LOCATED ENTIRELY ON R/W, A PERMANENT EASEMENT SHALL BE OBTAINED TO PREVENT FENCES OR OTHER OBSTRUCTIONS FROM BEING ERECTED AROUND THE METER BOX.
3. COVER OPENING & STEPS TO BE PLACED NEAREST THE METER REGISTER.
4. THE METER MUST BE INSTALLED WITH AT LEAST 8 DIAMETERS OF STRAIGHT PIPE SAME SIZE AS METER ON THE INLET SIDE TO PERMIT ON-SITE MAINTENANCE AND CALIBRATION. A STRAINER MAY BE PROVIDED IN LIEU OF THE STRAIGHT PIPE IN ACCORDANCE WITH THE METER MANUFACTURER'S RECOMMENDATIONS. AN INLET AND OUTLET GATE VALVE WITH BYPASS LINE ARE REQUIRED (SEE ILLUSTRATION).
5. METER BOXES SHALL NOT BE PLACED IN TRAFFIC AREAS WITHOUT PRIOR PERMISSION FROM FULTON COUNTY.
6. ALL VALVES AND FITTINGS INSIDE THE VAULT SHALL BE FLANGED.
7. ALL FITTINGS OUTSIDE THE VAULT SHALL BE PUSH-ON JOINT WITH AMERICAN "FAST-GRIP" GASKETS OR APPROVED EQUAL.
8. ALL METERS SHALL COME EQUIPPED WITH A TOUCHREAD OR TOUCHLESS SENSOR COMPATIBLE WITH FULTON COUNTY'S METER READING EQUIPMENT.
9. THIS DETAIL ALSO AUTHORIZED FOR INSTALLATION OF 3" AND SMALLER WATER METERS.
10. HATCH SHALL BE 4'X6', DOUBLE LEAF, FLUSH MOUNT, 1/4" DIAMOND PLATE, ALUMINUM DOORS LOCKABLE WITH A 5/8" ROD. HATCH SHALL BE BILCO # PDCM-3 OR PRE-APPROVED EQUAL FOR 6" & 8" METERS. HATCH SHALL BE 3'6"X 3'6" SINGLE LEAF FLUSH MOUNT 1/4" DIAMOND PLATE, ALUMINUM DOOR LOCKABLE WITH 5/8" ROD. HATCH SHALL BE BILCOPDM-1-S OR PRE-APPROVED EQUAL FOR 2" & 4" METERS.

METER SIZE	VAULT L	VAULT W	VAULT D	HATCH SIZE
3"	9'	5'	6'	3'6" X 3'6"
4"	9'	5'	6'	3'6" X 3'6"
6"	12'	6'	6'	4' X 6'
8"	12'	6'	6'	4' X 6'

FULTON COUNTY STANDARD DETAIL 805
LARGE METERS AND VAULT

DATE	REVISIONS	DATE	REVISIONS
8/08	NRR		

DGS/DRN/CHKD: CMS
APPROVED: REW
DATE: 12-2-05

FULTON COUNTY PUBLIC WORKS
141 PRYOR ST. ATLANTA, GA. 30303
404-612-7400 FAX: 404-224-0498

DRAWING NO. 805

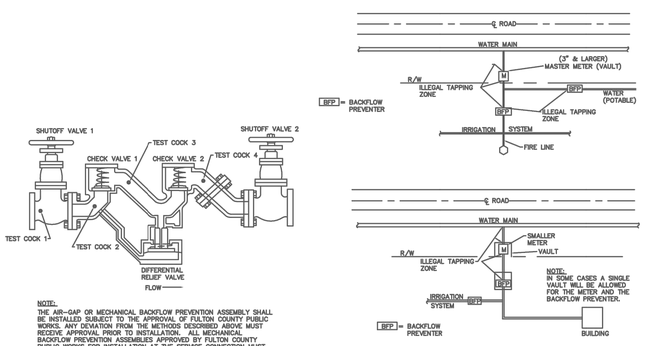

NOTE:
IN SOME CASES A SINGLE VAULT WILL BE ALLOWED FOR THE METER AND THE BACKFLOW PREVENTER.

NOTE:
THE AIR-GAP OR MECHANICAL BACKFLOW PREVENTION ASSEMBLY SHALL BE INSTALLED SUBJECT TO THE APPROVAL OF FULTON COUNTY PUBLIC WORKS. ANY DEVIATION FROM THE METHODS DESCRIBED ABOVE MUST RECEIVE APPROVAL PRIOR TO INSTALLATION. ALL MECHANICAL BACKFLOW PREVENTION ASSEMBLIES APPROVED BY FULTON COUNTY PUBLIC WORKS FOR INSTALLATION AT THE SERVICE CONNECTION MUST BE APPROVED BY THE FOUNDATION FOR CROSS-CONNECTION CONTROL AND HYDRAULIC RESEARCH, UNIVERSITY OF SOUTHERN CALIFORNIA. THESE ASSEMBLIES ARE ONLY APPROVED FOR THE HORIZONTAL ORIENTATIONS. CHOICE OF THE TYPE OF BACKFLOW PREVENTION ASSEMBLY, I.E. REDUCED PRESSURE PRINCIPLE OR DOUBLE CHECK VALVE ASSEMBLY, WILL BE BASED ON THE DEGREE OF HAZARD AS EVALUATED BY FULTON COUNTY PUBLIC WORKS.

FOR FURTHER INFORMATION REFER TO THE FULTON COUNTY MANUAL ON CROSS CONNECTIONS.

FULTON COUNTY STANDARD DETAIL 807
REDUCED PRESSURE PRINCIPLE
BACKFLOW–PREVENTION ASSEMBLY (1)

DATE	REVISIONS	DATE	REVISIONS
8/08	NRR		

DGS/DRN/CHKD: REB
APPROVED: REW
DATE: 12-2-05

FULTON COUNTY PUBLIC WORKS
141 PRYOR ST. ATLANTA, GA. 30303
404-612-7400 FAX: 404-224-0498

DRAWING NO. 807

REDUCED – PRESSURE PRINCIPLE BACKFLOW PREVENTION ASSEMBLY (RPBA)

DESCRIPTION:
THE APPROVED REDUCED–PRESSURE PRINCIPLE BACKFLOW–PREVENTION ASSEMBLY CONSISTS OF TWO INDEPENDENTLY ACTING, APPROVED CHECK VALVES TOGETHER WITH A HYDRAULICALLY OPERATING, MECHANICALLY INDEPENDENT PRESSURE DIFFERENTIAL RELIEF VALVE LOCATED BETWEEN THE CHECK VALVES AND BELOW THE FIRST CHECK VALVE. THESE UNITS ARE LOCATED BETWEEN TWO TIGHTLY CLOSING RESILIENT–SEATED SHUTOFF VALVES, AS AN ASSEMBLY, AND ARE EQUIPPED WITH PROPERLY LOCATED RESILIENT–SEATED TEST COCKS AS SHOWN.

APPLICATION:
THE RPBA IS EFFECTIVE AGAINST BACKFLOW CAUSED BY BACKPRESSURE AND BACKSIPHONAGE.
THE RPBA IS NORMALLY USED IN LOCATIONS WHERE AN APPROVED AIR GAP IS IMPRACTICAL.

INSTALLATION:
THE RPBA SHALL BE INSTALLED WITH ADEQUATE SPACE TO FACILITATE MAINTENANCE AND TESTING. THE INSTALLATION SHOULD NOT REQUIRE PLATFORMS, LADDERS, OR LIFTS FOR ACCESS.
ADEQUATE CLEARANCE FROM THE FLOOR, CEILING, AND WALLS MUST BE PROVIDED TO FACILITATE THE REMOVAL OF THE RELIEF VALVE AND/OR CHECK VALVES.

AN RPBA MUST BE PROTECTED FROM FREEZING TEMPERATURES AND IF INSTALLED WHERE TEMPERATURES WILL REACH 110 DEGREES FAHRENHEIT (43 DEGREES CELSIUS) OR ABOVE, THE HOT–WATER TYPE OF ASSEMBLY MUST BE USED. CONSULT MANUFACTURER'S SPECIFICATIONS FOR RECOMMENDATIONS.
AN RPBA SHALL NOT BE INSTALLED IN A PIT BELOW GROUND LEVEL. SEMIBURIED PITS ARE ACCEPTABLE IF THE RPBA IS INSTALLED ABOVE THE GROUND OR THE MAXIMUM FLOOD LEVEL WITH THE APPROVED AIR GAP BETWEEN THE RELIEF VALVE PORT AND THE DAYLIGHT DRAIN.
THE DAYLIGHT DRAIN FROM ABOVE GROUND OR SEMIBURIED VAULTS MUST PROVIDE: ADEQUATE DRAINAGE FOR THE DISCHARGE FROM THE REDUCED–PRESSURE PRINCIPLE ASSEMBLY RELIEF VALVE PORT.
ACCESS FOR MAINTENANCE AND PERIODIC TESTING MUST ALSO BE PREPARED.

BEFORE INSTALLING AN RPBA, ENSURE THAT THE RELIEF VALVES ARE IN GOOD WORKING CONDITION.
IF THE RPBA IS LOCATED INSIDE A BUILDING, A DRAIN MUST BE PROVIDED TO RECEIVE SPILLAGE FROM THE RELIEF VALVE PORT. THE RELIEF VALVE PORT MUST ALWAYS HAVE AN APPROVED AIR GAP BETWEEN IT AND THE DRAIN OR MAXIMUM FLOOD LEVEL, WHICHEVER IS HIGHEST.
ALL REDUCED–PRESSURE PRINCIPLE ASSEMBLIES SHALL BE INSTALLED IN THE

THE RPBA SHALL NOT BE INSTALLED IN AN AREA WHERE CORROSIVE FUMES OR GASES COULD RENDER THE ASSEMBLY INOPERABLE.

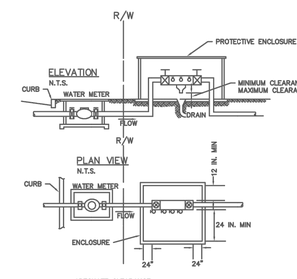

FULTON COUNTY STANDARD DETAIL 808
REDUCED PRESSURE PRINCIPLE
BACKFLOW–PREVENTION ASSEMBLY (2)

DATE	REVISIONS	DATE	REVISIONS
8/08	NRR		

DGS/DRN/CHKD: REB
APPROVED: REW
DATE: 12-2-05

FULTON COUNTY PUBLIC WORKS
141 PRYOR ST. ATLANTA, GA. 30303
404-612-7400 FAX: 404-224-0498

DRAWING NO. 808

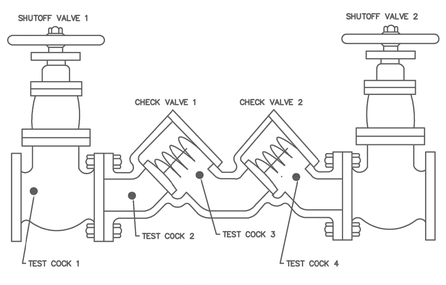

NOTE: THE AIR–GAP OR MECHANICAL BACKFLOW PREVENTION ASSEMBLY SHALL BE INSTALLED SUBJECT TO THE APPROVAL OF FULTON COUNTY PUBLIC WORKS. ANY DEVIATION FROM THE METHODS DESCRIBED ABOVE MUST RECEIVE APPROVAL PRIOR TO INSTALLATION. ALL MECHANICAL BACKFLOW PREVENTION ASSEMBLIES APPROVED BY FULTON COUNTY PUBLIC WORKS FOR INSTALLATION AT THE SERVICE CONNECTION MUST BE APPROVED BY THE FOUNDATION FOR CROSS–CONNECTION CONTROL AND HYDRAULIC RESEARCH, UNIVERSITY OF SOUTHERN CALIFORNIA. THESE ASSEMBLIES ARE ONLY APPROVED FOR THE HORIZONTAL ORIENTATIONS. CHOICE OF THE TYPE OF BACKFLOW PREVENTION ASSEMBLY, I.E. REDUCED PRESSURE PRINCIPLE OR DOUBLE CHECK VALVE ASSEMBLY, WILL BE BASED ON THE DEGREE OF HAZARD AS EVALUATED BY FULTON COUNTY PUBLIC WORKS.
FOR FURTHER INFORMATION REFER TO THE FULTON COUNTY MANUAL ON CROSS CONNECTIONS.

FULTON COUNTY STANDARD DETAIL 809
DOUBLE CHECK VALVE ASSEMBLY

DATE	REVISIONS	DATE	REVISIONS
8/08	NRR		

DGS/DRN/CHKD: REB
APPROVED: REW
DATE: 12-2-05

FULTON COUNTY PUBLIC WORKS
141 PRYOR ST. ATLANTA, GA. 30303
404-612-7400 FAX: 404-224-0498

DRAWING NO. 809

DOUBLE CHECK VALVE ASSEMBLE: (DCVA)

DESCRIPTION:
THIS ASSEMBLY CONSISTS OF TWO INTERNALLY LOADED CHECK VALVES, EITHER SPRING–LOADED OR INTERNALLY WEIGHTED, INSTALLED AS A UNIT BETWEEN TWO TIGHTLY CLOSING RESILIENT–SEATED SHUTOFF VALVES AS AN ASSEMBLY, AND FITTINGS WITH PROPERLY LOCATED RESILIENT–SEATED TEST COCKS AS SHOWN.

APPLICATION:
THE DCVA IS EFFECTIVE AGAINST BACKFLOW CAUSED BY BACKPRESSURE AND BACKSIPHONAGE AND IS USED TO PROTECT THE WATER SYSTEM FROM POLLUTANTS THAT WOULD NOT CONSTITUTE AN ACTUAL HEALTH HAZARD, BUT THAT MIGHT BE OBJECTIONABLE TO THE WATER SUPPLY SYSTEM.

INSTALLATION:
THE DCVA SHOULD BE INSTALLED WITH ADEQUATE SPACE TO FACILITATE MAINTENANCE AND TESTING AND SHOULD HAVE FREE ACCESS WITHOUT THE USE OF PLATFORMS, LADDERS, OR LIFTS.

A DCVA SHOULD NOT BE INSTALLED BELOW GROUND LEVEL UNLESS PROVIDED WITH ADEQUATE DRAINAGE TO MAINTAIN A DRY LOCATION. WHERE AN ASSEMBLY MUST BE INSTALLED IN A LOCATION THAT IS SUSCEPTIBLE TO FLOODING, THE TEST COCKS SHALL BE PLUGGED.

ALL DCVAS SHALL BE INSTALLED IN A HORIZONTAL POSITION UNLESS OTHERWISE RECOMMENDED BY THE MANUFACTURER AND/OR FULTON COUNTY PUBLIC WORKS.

A DCVA MUST BE PROTECTED FROM FREEZING TEMPERATURES. FOR TEMPERATURES OF 100 DEGREES FAHRENHEIT (43 DEGREES CELSIUS) OR ABOVE, CONSULT MANUFACTURER'S LITERATURE FOR RECOMMENDATIONS.

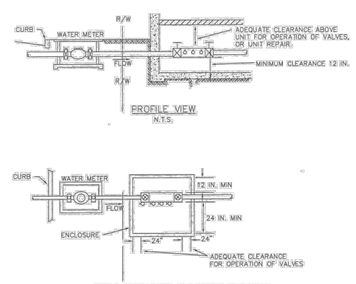

FULTON COUNTY STANDARD DETAIL 810
DOUBLE CHECK VALVE ASSEMBLY

DATE	REVISIONS	DATE	REVISIONS
8/08	NRR		
7/16	TPM		

DGS/DRN/CHKD: CMS
APPROVED: REW
DATE: 12-2-05

FULTON COUNTY PUBLIC WORKS
141 PRYOR ST. ATLANTA, GA. 30303
404-612-7400 FAX: 404-224-0498

DRAWING NO. 810

NOTES:
1. TOP OF SERVICE BOX SHALL BE FLUSH WITH FINAL SURFACE IN SIDEWALKS AND PAVED AREAS.
2. HEAVY DUTY CLEANOUT BOX AND LID ARE REQUIRED IN PAVED AREAS.

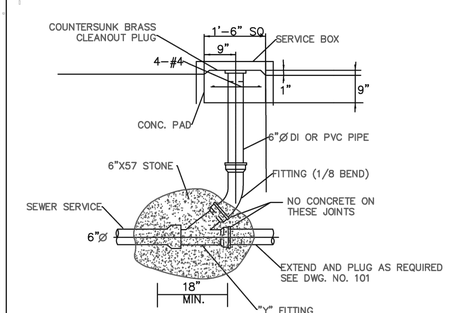

USF 7635 SEWER VALVE BOX AND COVER
N.T.S.

STANDARDS AND SPECIFICATIONS:
1. COVER IS MARKED "S".

TO ORDER:
1. SPECIFY USF NUMBER AND COVER TYPE.

COVER TYPE	LOAD RATING	COVER WEIGHT	TOTAL WEIGHT
FJ	HEAVY DUTY	55	230

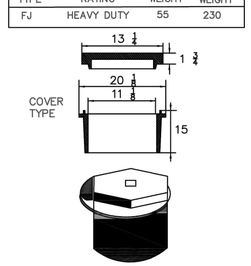

NO. 53 STANDARD

FULTON COUNTY STANDARD DETAIL 709
SERVICE CONNECTION CLEANOUT

DATE	REVISIONS	DATE	REVISIONS
8/08	NRR		

DGS/DRN/CHKD: CMS
APPROVED: REW
DATE: 12-2-05

FULTON COUNTY PUBLIC WORKS
141 PRYOR ST. ATLANTA, GA. 30303
404-612-7400 FAX: 404-224-0498

DRAWING NO. 709

BLUE LANDWORKS
CONSULTING ENGINEERS & SURVEYORS
LICENSE # PEF005518
LICENSE # LSF001044
5019 WEST BROAD STREET
SUITE M230
SUGAR HILL, GEORGIA 30518
TELEPHONE: (678) 804-8586
INFO@BLUELANDWORKS.COM
WWW.BLUELANDWORKS.COM

PREPARED FOR:
VILLAGE PARK SENIOR LIVING, LLC
1 PERIMETER PARK SOUTH, SUITE 175N
ATLANTA, GA 30328
PHONE: 678 677-8600
CONTACT: BRYAN BRANDSON
EMAIL: bryan@gardenliving.com

GEORGIA REGISTERED PROFESSIONAL ENGINEER No. 27067 JONATHAN H. NIXOL

ISSUE #	DATE	REVISIONS
1	10/12/2021	SUBMIT FOR REVIEW

VILLAGE PARK MILTON
PHASE TWO
11940 ALPHARETTA HIGHWAY

PARCEL(S) 12-2340600056
LAND LOT 600, 1ST DISTRICT
CITY OF ALPHARETTA
FULTON COUNTY, GA
DRAWN: CC
CHECKED: JN

DETAILS

PROJECT# 2019.099
C-175

V:\2019-099 - 11940 Alpharetta Hwy\1000 - AutoCAD\30 - Construction\2019.099 @ Milton_DETAILS.dwg, C-175 10/7/2021 4:01 PM by Grant Crane

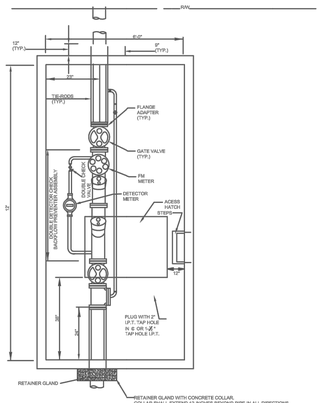

1. TYPE I VAULT SHALL BE USED FOR 3,4,6 OR 8-INCH FM METER.
2. SEE SPECIFICATION SECTION 02665 FOR MATERIAL SPECIFICATIONS. ALL MATERIAL TO BE FURNISHED BY CONTRACTOR.
3. ALL FITTINGS SHALL BE DUCTILE IRON WITH FLANGED JOINTS. GATE VALVES SHALL BE WITH HANDWHEELS.
4. VAULT SHALL BE PRECAST CONCRETE. MIN. INSIDE HEIGHT SHALL BE 6 FEET. LOAD BEARING VAULT SHALL BE DESIGNED BY PROPERTY OWNER'S ENGINEER, AND SUBMITTED TO COUNTY FOR APPROVAL.
5. ACCESS HATCH/FLOOR DOOR SHALL BE MIN. 36"X36" (BILCO MODEL PCM-5) FOR 3 & 4-INCH METERS OR 54"X54" (BILCO MODEL PDCM-3) FOR 6 & 8-INCH METERS.
6. VAULT FLOOR SHALL BE # 57 CRUSHED STONE, MIN. 6-INCHES THICK.
7. PROVIDE RETAINER GLAND ON PIPE BEYOND VAULT WALLS. PROVIDE TWO TIE RODS FROM FIRST INTERIOR FLANGE TO RETAINER GLANDS, WITH DOUBLE NUTS AND WASHERS. ENCASE RETAINER GLANDS IN CONCRETE. ALSO, PROVIDE TIE RODS FROM RETAINER GLAND TO TAPPING VALVE OR CASING UNDER ROAD, WHICH-EVER IS CLOSER. RODS SHALL BE PROVIDED WITH BITUMASTIC COATING.
8. VAULT WALL OPENINGS SHALL BE SEALED WITH NON-SHRINK GROUT. ENSURE 1-INCH CLEARANCE BETWEEN TOP OF PIPE AND PRECAST WALL.
9. MANHOLE STEPS SHALL BE DOWELLED INTO VAULT WALL AND CENTERED ON ACCESS HATCH.

FM METER		
METER SIZE	6" & 8"	3" & 4"
VAULT INTERIOR DIMENSION	12" X 6'	9' X 5'

FULTON COUNTY STANDARD DETAIL 825
FM ASSEMBLY

DATE	REVISIONS	DATE	REVISIONS
8/08	NRR		

DGS/DRN/CHKD: CMS
APPROVED: REW
DATE: 3-7-06

FULTON COUNTY

FULTON COUNTY PUBLIC WORKS
141 PRYOR ST. ATLANTA, GA. 30303
404-612-7400 FAX: 404-224-0498

DRAWING NO. 825

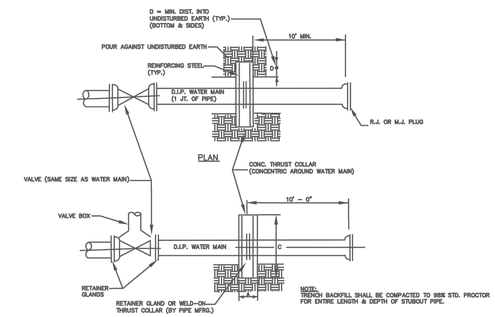

SECTION

MAIN DIA	CONCRETE COLLAR DIM. A	B	C	D	REINFORCING STEEL
24"	1'-10"	9"-3"	9"-3"	2"-9"	#9 @ 12" O.C. E.W.E.F.
16"	1'-3"	6"-6"	6"-6"	1'-10"	#8 @ 12" O.C. E.W.E.F.
10" OR 12"	1'-2"	5"-3"	5"-3"	1'-4"	#7 @ 12" O.C. E.W.E.F.
6" OR 8"	1'-0"	4'-0"	4'-0"	1'-0"	#6 @ 12" O.C. E.W.E.F.

TEST PRESSURE: 250 P.S.I.
SOIL BEARING PRESSURE: 2500 P.S.F.

NOTE:
TERMINATION DETAIL FOR LARGER DIAMETER PIPE SHALL BE DETERMINED FOR EACH PROJECT.

FULTON COUNTY STANDARD DETAIL 820
WATER MAIN TERMINATION

DATE	REVISIONS	DATE	REVISIONS
8/08	NRR		

DGS/DRN/CHKD: REB
APPROVED: REW
DATE: 12-2-05

FULTON COUNTY

FULTON COUNTY PUBLIC WORKS
141 PRYOR ST. ATLANTA, GA. 30303
404-612-7400 FAX: 404-224-0498

DRAWING NO. 820

GENERAL NOTES:

1. THRUST BLOCK DIMENSIONS ARE BASED ON 2000 LB. PER SQ. FT. SOIL BEARING PRESSURE AND 250 LBS. PER SQ. IN. TEST PRESSURE ACTUAL INSIDE DIAMETER OF DUCTILE IRON PIPE CLASS 52 USED AS STANDARD
2. SOIL CONDITIONS SHALL BE VERIFIED BY ENGINEER BEFORE THRUST BLOCK IS CONSTRUCTED WHERE SOIL BEARING PRESSURE IS LESS THAN 2000 LB/FT. THRUST BLOCK BEARING AREA SHALL BE INCREASED APPROPRIATELY
3. ALL CONCRETE SHALL BE CLASS A, 4000 PSI

* SEE DWG. NO. 132B FOR THRUST BLOCK CONCRETE SPECIFICATIONS

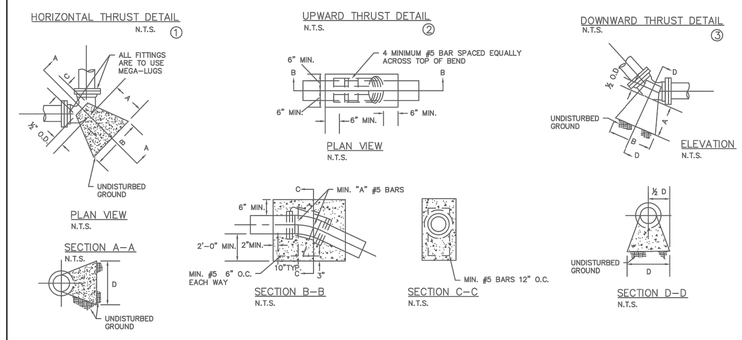

FULTON COUNTY STANDARD DETAIL 133A
STANDARD THRUST BLOCKS FOR WATER

DATE	REVISIONS	DATE	REVISIONS
8/08	NRR		

DGS/DRN/CHKD: REB
APPROVED: REW
DATE: 12-2-05

FULTON COUNTY

FULTON COUNTY PUBLIC WORKS
141 PRYOR ST. ATLANTA, GA. 30303
404-612-7400 FAX: 404-224-0498

DRAWING NO. 132A

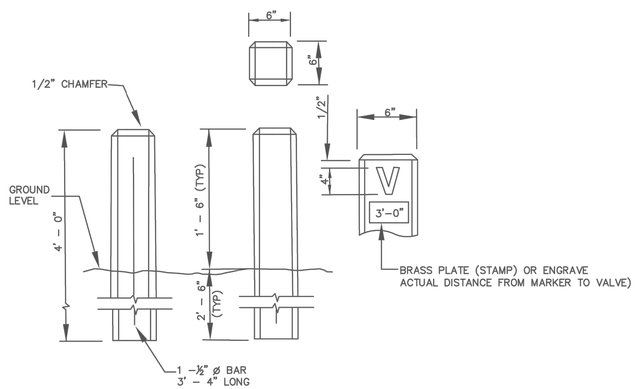

FULTON COUNTY STANDARD DETAIL 821
WATER VALVE MARKER

DATE	REVISIONS	DATE	REVISIONS
8/08	NRR		

DGS/DRN/CHKD: REB
APPROVED: REW
DATE: 12-2-05

FULTON COUNTY

FULTON COUNTY PUBLIC WORKS
141 PRYOR ST. ATLANTA, GA. 30303
404-612-7400 FAX: 404-224-0498

DRAWING NO. 821

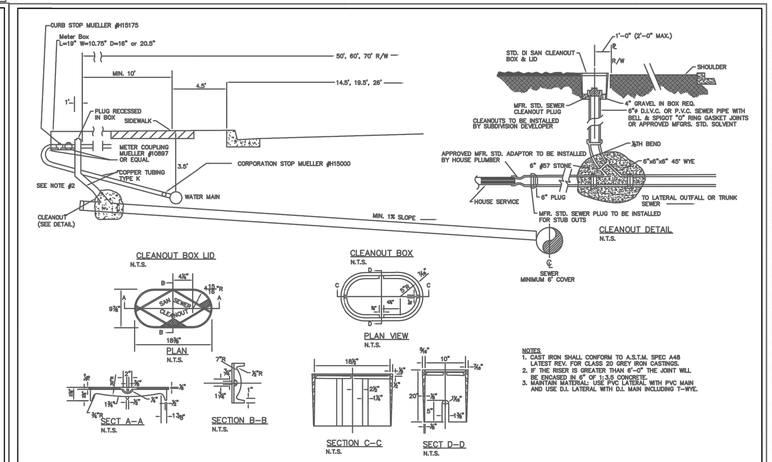

NOTES:
1. CAST IRON SHALL CONFORM TO A.S.T.M. SPEC A48 LATEST REV. FOR CLASS 20 GREY IRON CASTINGS.
2. IF THE RISER IS GREATER THAN 6'-0" THE JOINT WILL BE ENCASED IN 6" OF 1:3:5 CONCRETE.
3. MAINTAIN MATERIAL USE PVC LATERAL WITH PVC MAIN AND USE D.I. LATERAL WITH D.I. MAIN INCLUDING T-WYE.

FULTON COUNTY STANDARD DETAIL 711
SEWER LATERAL INSTALLATION DETAILS FOR CURBED STREETS

DATE	REVISIONS	DATE	REVISIONS
8/08	NRR		

DGS/DRN/CHKD: REB
APPROVED: REW
DATE: 12-2-05

FULTON COUNTY

FULTON COUNTY PUBLIC WORKS
141 PRYOR ST. ATLANTA, GA. 30303
404-612-7400 FAX: 404-224-0498

DRAWING NO. 711

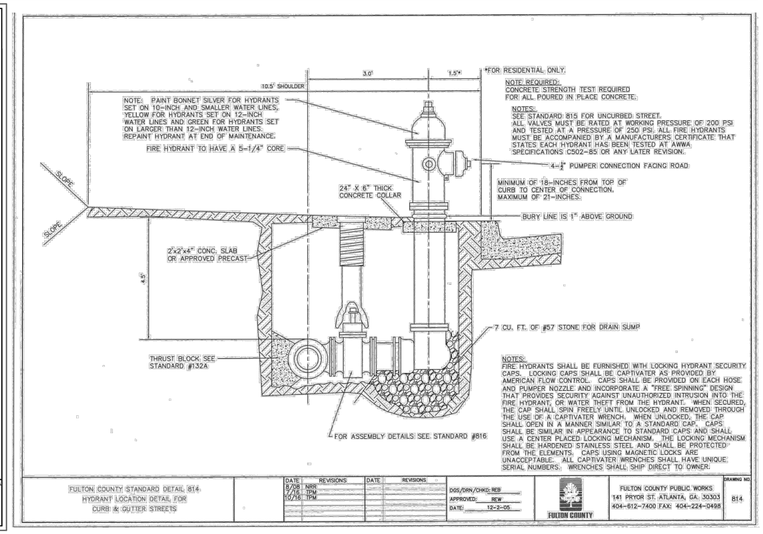

FULTON COUNTY STANDARD DETAIL 814
HYDRANT LOCATION DETAIL FOR CURB & GUTTER STREETS

DATE	REVISIONS	DATE	REVISIONS
8/08	NRR		
10/16	TPM		

DGS/DRN/CHKD: REB
APPROVED: REW
DATE: 12-2-05

FULTON COUNTY

FULTON COUNTY PUBLIC WORKS
141 PRYOR ST. ATLANTA, GA. 30303
404-612-7400 FAX: 404-224-0498

DRAWING NO. 814

NO DUMPING
DRAINS TO CREEK

AVAILABLE FROM

COMMUNITY DEVELOPMENT
2 PARK PLAZA
ALPHARETTA, GA 30009
PHONE: 678-297-6000

COSTS:

$5 EACH 4" DURACAST MARKER
$5 5 OZ. TUBE OF SPECIAL ADHESIVE (ADHERES 14 MARKERS)

* FOR PICK UP ONLY

CITY OF ALPHARETTA STORM DRAIN MARKER
N.T.S.

BLUE LANDWORKS
CONSULTING ENGINEERS & SURVEYORS
LICENSE # PEF005518
LICENSE # LSF001044
5019 WEST BROAD STREET
SUITE M230
SUGAR HILL, GEORGIA 30518
TELEPHONE: (678) 804-8586
INFO@BLUELANDWORKS.COM
WWW.BLUELANDWORKS.COM

PREPARED FOR:
VILLAGE PARK SENIOR LIVING, LLC
1100 PEACHTREE ST. SUITE 1100
ATLANTA, GA 30309
PHONE: 678 677-8600
CONTACT: BRYAN HUDSON
EMAIL: bryan@bpdevelop.com

GEORGIA REGISTERED PROFESSIONAL ENGINEER No. 27057 JONATHAN H. NICOL

ISSUE #	DATE	REVISIONS
1	10/12/2021	SUBMIT FOR REVIEW

VILLAGE PARK MILTON
PHASE TWO
11940 ALPHARETTA HIGHWAY

PARCEL(S) 12-2340600056
CITY OF ALPHARETTA
LAND LOT 600, 1ST DISTRICT
FULTON COUNTY, GA
DRAWN: GC
CHECKED: JN

DETAILS

PROJECT# 2019.099

C-176

V:\2019-099 - 11940 Alpharetta Hwy\000 - AutoCAD\30 - Construction\2019.099 IP Milton_DETAILS.dwg, C-176 10/7/2021 4:01 PM by Grant Crane

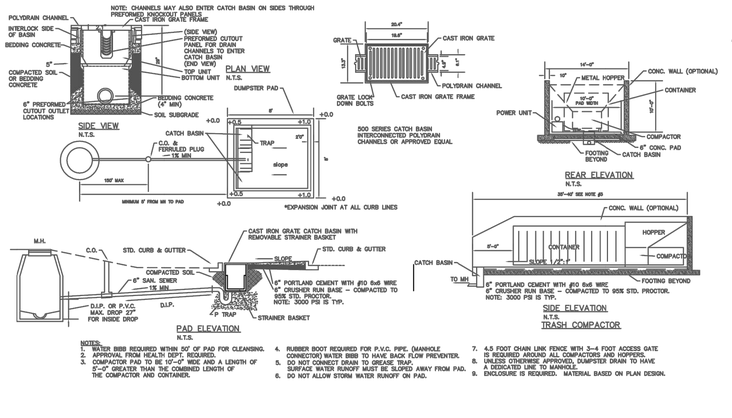

NOTES:
1. WATER BIBB REQUIRED WITHIN 50' OF PAD FOR CLEANSING.
2. APPROVAL FROM HEALTH DEPT. REQUIRED.
3. COMPACTOR PAD TO BE 10'-0" WIDE AND A LENGTH OF 5'-0" GREATER THAN THE COMBINED LENGTH OF THE COMPACTOR AND CONTAINER.
4. RUBBER BOOT REQUIRED FOR P.V.C. PIPE. (MANHOLE CONNECTOR) WATER BIBB TO HAVE BACK FLOW PREVENTER.
5. DO NOT CONNECT DRAIN TO GREASE TRAP. SURFACE WATER RUNOFF MUST BE SLOPED AWAY FROM PAD.
6. DO NOT ALLOW STORM WATER RUNOFF ON PAD.
7. 4.5 FOOT CHAIN LINK FENCE WITH 3-4 FOOT ACCESS GATE IS REQUIRED AROUND ALL COMPACTORS AND HOPPERS.
8. UNLESS OTHERWISE APPROVED, DUMPSTER DRAIN TO HAVE A DEDICATED LINE TO MANHOLE.
9. ENCLOSURE IS REQUIRED. MATERIAL BASED ON PLAN DESIGN.

FULTON COUNTY STANDARD DETAIL 703
TRASH COMPACTOR AND DUMPSTER PAD DETAILS

DATE	REVISIONS	DATE	REVISIONS
8/08	NRR		

DGS/DRN/CHKD: JM
APPROVED: REW
DATE: 12-2-05

FULTON COUNTY

FULTON COUNTY PUBLIC WORKS
141 PRYOR ST. ATLANTA, GA. 30303
404-612-7400 FAX: 404-224-0498

DRAWING NO. 703

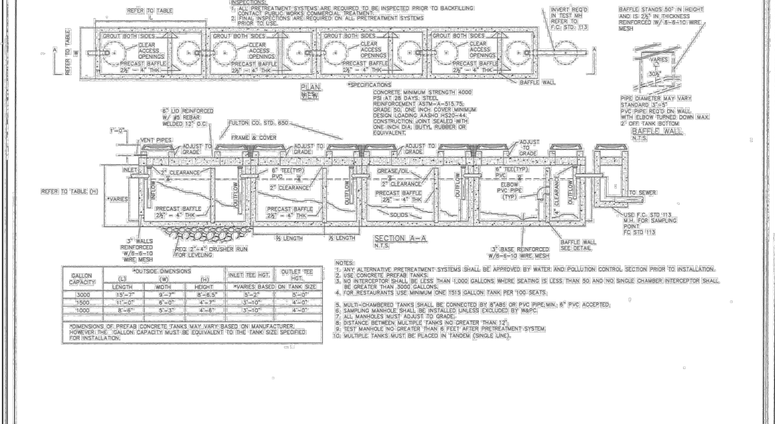

GALLON CAPACITY	*OUTSIDE DIMENSIONS (L) LENGTH	(W) WIDTH	(H) HEIGHT	INLET TEE HGT.	OUTLET TEE HGT.
				*VARIES BASED ON TANK SIZE	
3000	13'-3"	9'-3"	8'-6.5"	3'-2"	3'-0"
1500	11'-0"	6'-0"	4'-9"	3'-10"	4'-0"
1000	8'-8"	5'-3"	4'-6"	3'-10"	4'-0"

*DIMENSIONS OF PREFAB CONCRETE TANKS MAY VARY BASED ON MANUFACTURER, HOWEVER THE GALLON CAPACITY MUST BE EQUIVALENT TO THE TANK SIZE SPECIFIED FOR INSTALLATION.

FULTON COUNTY STANDARD DETAIL 701
GREASE/SOLIDS/OIL INTERCEPTOR & TANKS IN SERIES

DATE	REVISIONS	DATE	REVISIONS
8/08	NRR		
1/17	TPM		

DGS/DRN/CHKD: JM
APPROVED: REW
DATE: 12-2-05

FULTON COUNTY

FULTON COUNTY PUBLIC WORKS
141 PRYOR ST. ATLANTA, GA. 30303
404-612-7400 FAX: 404-224-0498

DRAWING NO. 701

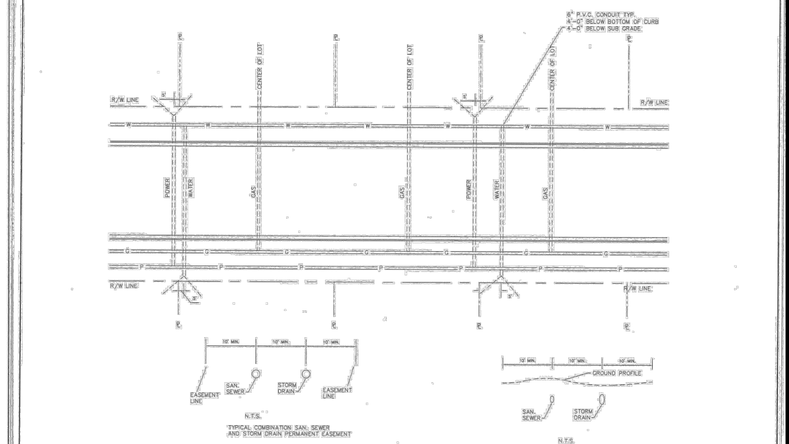

FULTON COUNTY STANDARD DETAIL 102
CONDUIT LOCATION FOR: UNDERGROUND UTILITIES COMBINATION SEWER EASEMENT

DATE	REVISIONS	DATE	REVISIONS
8/08	NRR		
1/17	TPM		

DGS/DRN/CHKD: CMS
APPROVED: REW
DATE: 12-2-05

FULTON COUNTY

FULTON COUNTY PUBLIC WORKS
141 PRYOR ST. ATLANTA, GA. 30303
404-612-7400 FAX: 404-224-0498

DRAWING NO. 102

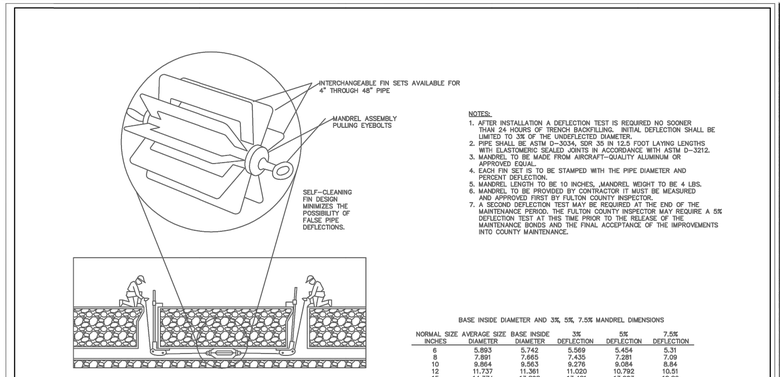

NOTES:
1. AFTER INSTALLATION A DEFLECTION TEST IS REQUIRED NO SOONER THAN 24 HOURS OF TRENCH BACKFILLING. INITIAL DEFLECTION SHALL BE LIMITED TO 3% OF THE UNDEFLECTED DIAMETER.
2. PIPE SHALL BE ASTM D-3034, SDR 35 IN 12.5 FOOT LAYING LENGTHS WITH ELASTOMERIC SEALED JOINTS IN ACCORDANCE WITH ASTM D-3212.
3. MANDREL TO BE MADE FROM AIRCRAFT-QUALITY ALUMINUM OR APPROVED EQUAL.
4. EACH FIN SET IS TO BE STAMPED WITH THE PIPE DIAMETER AND PERCENT DEFLECTION.
5. MANDREL LENGTH TO BE 10 INCHES, MANDREL WEIGHT TO BE 4 LBS.
6. MANDREL TO BE PROVIDED BY CONTRACTOR IT MUST BE MEASURED AND APPROVED FIRST BY FULTON COUNTY INSPECTOR.
7. A SECOND DEFLECTION TEST MAY BE REQUIRED AT THE END OF THE MAINTENANCE PERIOD. THE FULTON COUNTY INSPECTOR MAY REQUIRE A 5% DEFLECTION TEST AT THIS TIME PRIOR TO THE RELEASE OF THE MAINTENANCE BONDS AND THE FINAL ACCEPTANCE OF THE IMPROVEMENTS INTO COUNTY MAINTENANCE.

BASE INSIDE DIAMETER AND 3%, 5%, 7.5% MANDREL DIMENSIONS

NORMAL SIZE INCHES	AVERAGE SIZE BASE INSIDE DIAMETER	3% DEFLECTION	5% DEFLECTION	7.5% DEFLECTION
6	5.893	5.742	5.569	5.454
8	7.891	7.665	7.435	7.281
10	9.864	9.563	9.276	9.084
12	11.737	11.361	11.020	10.792
15	14.374	13.898	13.481	13.203

THE DEFLECTION TEST GAUGE CAN BE PULLED EASILY THROUGH THE PIPELINE.

FULTON COUNTY STANDARD DETAIL 106
MANDREL DETAIL FOR PVC PIPE INSTALLATION

DATE	REVISIONS	DATE	REVISIONS
8/08	NRR		

DGS/DRN/CHKD: CMS
APPROVED: REW
DATE: 12-2-05

FULTON COUNTY

FULTON COUNTY PUBLIC WORKS
141 PRYOR ST. ATLANTA, GA. 30303
404-612-7400 FAX: 404-224-0498

DRAWING NO. 106

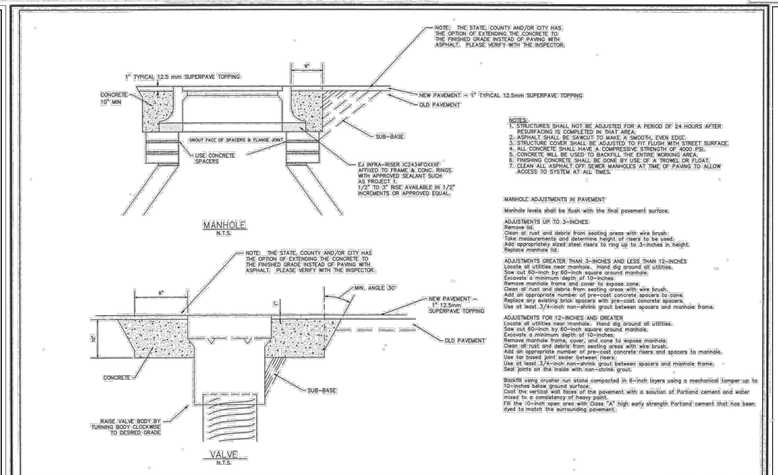

MANHOLE ADJUSTMENTS IN PAVEMENT

Manhole levels shall be flush with the final pavement surface.

ADJUSTMENTS UP TO 3-INCHES:
Remove lid.
Clean of rust and debris from seating areas with wire brush.
Take measurements and determine height of risers to be used.
Add appropriately sized steel risers to ring up to 3-inches in height.
Replace manhole lid.

ADJUSTMENTS GREATER THAN 3-INCHES AND LESS THAN 12-INCHES
Locate all utilities near manhole. Hand dig around all utilities.
Saw cut 60-inch by 60-inch square around manhole.
Remove manhole frame and cover to expose cone.
Clean all rust and debris from seating areas with wire brush.
Add an appropriate number of pre-cast concrete spacers to cone.
Replace any existing brick spacers with pre-cast concrete spacers.
Use at least 3/4-inch non-shrink grout between spacers and manhole frame.

ADJUSTMENTS FOR 12-INCHES AND GREATER
Locate all utilities near manhole. Hand dig around all utilities.
Saw cut 60-inch by 60-inch square around manhole.
Remove manhole frame and cover to expose manhole.
Remove manhole frame, cover, and cone to expose manhole.
Clean all rust and debris from seating areas with wire brush.
Add an appropriate number of pre-cast concrete risers and spacers to manhole.
Use tar based joint sealer between risers.
Use at least 3/4-inch non-shrink grout between spacers and manhole frame.
Seal joints on the inside with non-shrink grout.

BASINS using crushed run stone compacted in 6-inch layers using a mechanical tamper up to 10-inches below ground surface.
Cool the vertical wall faces of the pavement with a solution of Portland cement and water mixed to a consistency of heavy paint.
Fill the 10-inch open area with Class "A" high early strength Portland cement that has been dyed to match the surrounding pavement.

FULTON COUNTY STANDARD DETAIL 105
STRUCTURE ADJUSTMENT

DATE	REVISIONS	DATE	REVISIONS
8/08	NRR		
1/17	TPM		

DGS/DRN/CHKD: CMS
APPROVED: REW
DATE: 12-2-05

FULTON COUNTY

FULTON COUNTY PUBLIC WORKS
141 PRYOR ST. ATLANTA, GA. 30303
404-612-7400 FAX: 404-224-0498

DRAWING NO. 105

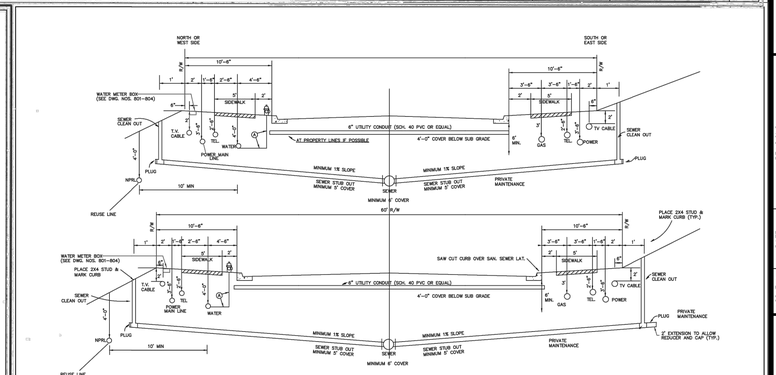

FULTON COUNTY STANDARD DETAIL 101
UTILITY LOCATION UNDERGROUND UTILITY WITH REUSE TYPICAL CROSS SECTION

DATE	REVISIONS	DATE	REVISIONS
8/08	NRR		
1/17	TPM		

DGS/DRN/CHKD: CMS
APPROVED: REW
DATE: 12-2-05

FULTON COUNTY

FULTON COUNTY PUBLIC WORKS
141 PRYOR ST. ATLANTA, GA. 30303
404-612-7400 FAX: 404-224-0498

DRAWING NO. 101

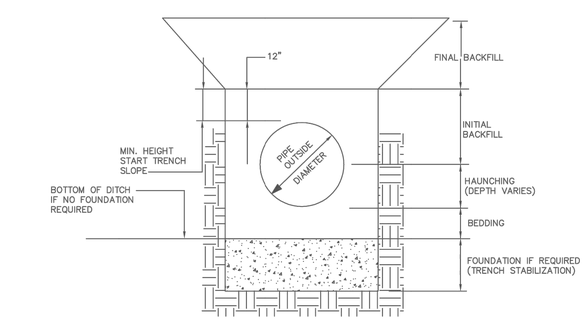

NOTE: SEE DETAIL # 103 AND #109 FOR DIMENSIONS AND MATERIALS

FULTON COUNTY STANDARD DETAIL 108
TRENCH TERMINOLOGY

DATE	REVISIONS	DATE	REVISIONS
8/08	NRR		

DGS/DRN/CHKD: JM
APPROVED: REW
DATE: 12-2-05

FULTON COUNTY

FULTON COUNTY PUBLIC WORKS
141 PRYOR ST. ATLANTA, GA. 30303
404-612-7400 FAX: 404-224-0498

DRAWING NO. 108

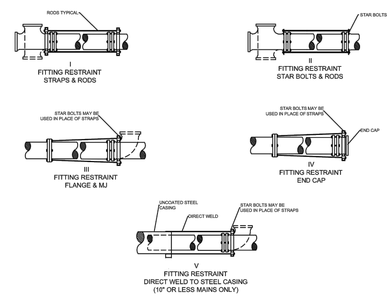

NOTES:
1. SEE DWG. NO. 126 FOR NUMBER AND DIAMETER OF RODS REQUIRED.
2. NO FLANGES ARE TO BE BURIED.
3. AFTER INSTALLATION, TIE-RODS AND CLAMP ASSEMBLIES SHALL BE CLEANED AND THOROUGHLY COATED WITH ROYSTON LABORATIORIES, INC. ROSKOTE PLASTIC NO. A 939 OR KOPPERS CO. , INC. BITUMASTIC SUPERSERVICE BLACK OR APPROVED EQUIVALENT.
4. WHEN RESTRAINING FITTINGS TO STEEL CASING PIPE, TIE-RODS MUST BE WELDED DIRECTLY TO THE CASING - USE OF STAR BOLTS ARE PROHIBITED. CASING MUST BE FULLY WELDED THROUGHOUT ITS LENGTH AND BE A MINIMUM OF 30' IN LENGTH. AREA TO BE WELDED MUST BE COMPLETELY BARE AND FREE OF ANY COATING MATERIAL.

FULTON COUNTY STANDARD DETAIL 127
THRUST RESTRAINTS: TIE-ROD INSTALLATION

DATE	REVISIONS	DATE	REVISIONS
8/08	NRR		

DGS/DRN/CHKD: CMS
APPROVED: REW
DATE: 12-2-05

FULTON COUNTY

FULTON COUNTY PUBLIC WORKS
141 PRYOR ST. ATLANTA, GA. 30303
404-612-7400 FAX: 404-224-0498

DRAWING NO. 127

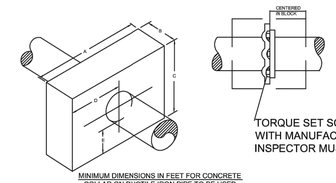

TORQUE SET SCREWS IN ACCORDANCE WITH MANUFACTURER'S INSTRUCTIONS. INSPECTOR MUST WITNESS INSTALLATION.

MINIMUM DIMENSIONS IN FEET FOR CONCRETE COLLAR ON DUCTILE IRON PIPE TO BE USED WITH EMBEDDED DUCTILE IRON RETAINER GLAND

PIPE SIZE	A	B	C	D	E	VOLUME CU. YDS.	CONC. WT.	THRUST
4"	3'-6"	3'-0"	1'-5"	1'-6"	1'-0"	0.55	2230	3150
6"	4'-0"	3'-0"	2'-2"	2'-0"	1'-0"	1.15	4650	7070
8"	4'-6"	3'-0"	3'-0"	2'-3"	1'-3"	1.50	6075	12,570
10"	5'-2"	3'-0"	3'-2"	2'-7"	1'-3"	1.81	7330	19,635
12"	5'-9"	3'-0"	3'-8"	2'-10"	1'-8"	2.34	9475	28,775
14"	6'-6"	3'-0"	4'-0"	3'-3"	1'-9"	2.89	11,700	38,490
16"	6'-9"	3'-0"	4'-9"	3'-3"	2'-3"	3.16	14,410	50,270

NOTES:
1. ALL MAINS GREATER THAN 13" I.D. SHALL BE INDIVIDUALLY CALCULATED BY THE FULTON COUNTY ENGINEERING DEPARTMENT.
2. SOIL CONDITIONS SHALL BE VERIFIED BY THE ENGINEER BEFORE THRUST RESTRAINT DESIGN IS IMPLEMENTED.
3. PIPE MUST BE DUCTILE IRON.

DESIGN DATA:
1. DIMENSION OF THRUST RESTRAINT IN FEET BASED ON 2000 POUNDS PER SQUARE FOOT SOIL BEARING PRESSURE AND 230 PER SQUARE INCH TEST PRESSURE. ACTUAL INSIDE DIAMETER OF DUCTILE IRON PIPE, CLASS 31, USED AS STANDARD.
2. CONCRETE SHALL BE CLASS A, 3000 P.S.I.
3. UNDER ADVERSE CONTRUCTION CONDITIONS, CONCRETE SHALL BE "HIGH EARLY" TYPE.

FULTON COUNTY STANDARD DETAIL 125
THRUST RESTRAINT CONCRETE COLLAR

DATE	REVISIONS	DATE	REVISIONS
8/08	NRR		

DGS/DRN/CHKD: CMS
APPROVED: REW
DATE: 12-2-05

FULTON COUNTY

FULTON COUNTY PUBLIC WORKS
141 PRYOR ST. ATLANTA, GA. 30303
404-612-7400 FAX: 404-224-0498

DRAWING NO. 125

BLUE LANDWORKS
CONSULTING ENGINEERS & SURVEYORS
LICENSE # PEF005518
LICENSE # LSF001044
5019 WEST BROAD STREET
SUITE M230
SUGAR HILL, GEORGIA 30518
TELEPHONE: (678) 804-8586
INFO@BLUELANDWORKS.COM
WWW.BLUELANDWORKS.COM

PREPARED FOR:
VILLAGE PARK SENIOR LIVING, LLC
1180 PEACHTREE STREET SUITE 1700
ATLANTA, GA 30326
PHONE: 678 677-8600
CONTACT: BRYAN HODGSON
EMAIL: bryan@bpdevelop.com

GEORGIA REGISTERED PROFESSIONAL ENGINEER No. 27087 JONATHAN H. NIEOL

ISSUE #	DATE	REVISIONS
1	10/12/2021	SUBMIT FOR REVIEW

VILLAGE PARK MILTON
PHASE TWO
11940 ALPHARETTA HIGHWAY

PARCEL(S) 12-2340060066
CITY OF ALPHARETTA
LAND LOT 600, 1ST DISTRICT
FULTON COUNTY, GA
DRAWN: GC
CHECKED: JN

DETAILS

PROJECT# 2019.099

C-177

V:\2019-099 - 11940 Alpharetta Hwy\1000 - AutoCAD\30 - Construction\2019.099 IP Milton_DETAILS.dwg, C-177 10/7/2021 4:01 PM by Grant Crowe

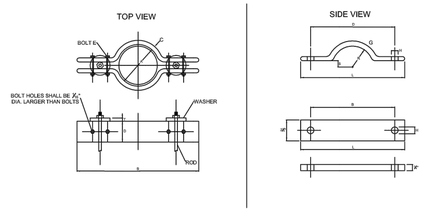

STEEL SOCKET CLAMP DIMENSIONS (INCHES)							
SIZE	A	B	C	D	E	T	ROD & C WASH SIZE
4	6	14 5/8	1/2	2	5/8 x 3 1/2	5/8	3/4
6	7 1/8	18 7/8	1/2	2	5/8 x 3 1/2	5/8	3/4
8	9 5/16	19 1/8	5/8	2 1/2	5/8 x 3 3/4	5/8	3/4
10	11 1/2	21 3/8	5/8	2 1/2	5/8 x 3 3/4	3/4	3/4
12	13 1/2	25 1/8	5/8	3	5/8 x 3 3/4	3/4	3/4
14	13 3/4	28 1/4	3/4	3	7/8 x 4 1/2	7/8	3/4
16	17 7/8	31 3/8	3/4	4	7/8 x 4 1/2	7/8	3/4
20	22 1/8	37 3/4	3/4	4 1/2	1 1/4 x 5	1 1/8	3/4
24	26 3/8	44 1/4	3/4	5	1 1/2x6 1/2	1 1/4	3/4

ABOVE ANCHOR STRAP DIMENSIONS (INCHES)							
SIZE	B	G	H	L	R	S	
4	10 1/8	5/8 X 2 1/2	13/16	12 1/2	2 1/2	3/4	
6	12 1/8	5/8 X 2 1/2	13/16	14 1/2	3 3/16	3/4	
8	14 3/8	5/8 X 2 1/2	13/16	16 3/4	3 7/16	3/4	
10	16 11/16	5/8 X 2 1/2	1 1/16	19 1/16	3 3/4	3/4	
12	19 3/16	5/8 X 3	1 1/16	22 5/16	3 3/4	7/8	

NOTES:
1. INSTALLATION AND MATERIAL OF RODS, CLAMPS, STRAPS, BOLTS AND WASHERS SHALL CONFORM TO THE NATIONAL FIRE CODE - NFPA NO. 24 (LATEST REVISION)
2. YOKES AND ANCHOR STRAPS FOR FITTINGS (LARGER THAN 12" SHALL BE DESIGNED AND APPROVED FOR SPECIFIC INSTALLATION
3. RODS TO BE HIGH TENSILE, NOT ROLLED STEEL WITH TENSILE STRENGTH OF 110,000 P.S.I. AND A MIN. OF 95,000 YIELD STRENGTH
4. NUTS TO HAVE HEAVY DUTY SEMI-FINISH WITH NATIONAL COURSE THREADS
5. AFTER INSTALLATION, TIE RODS AND CLAMP ASSEMBLY SHALL BE THOROUGHLY COVERED WITH ROYSTON LABORATORIES, INC. ROSKOTE MASTIC NO. A639 OR KOPPERS CO., INC. BITUMASTIC SUPERSERVICE BLACK OR APPROVED EQUIVALENT.

FULTON COUNTY STANDARD DETAIL 128 THRUST RESTRAINTS: STRAP AND ROD DETAILS	DATE / R/DS / REVISIONS / MRR	DATE	REVISIONS	DGS/DRN/CHKD: CMS APPROVED: REW DATE: 12-2-05	FULTON COUNTY	FULTON COUNTY PUBLIC WORKS 141 PRYOR ST. ATLANTA, GA. 30303 404-612-7400 FAX: 404-224-0498	DRAWING NO. 128

NOTES:
1. ON PIPE SIZES 6"-14" ROD AND NUT WILL HAVE MIN. YIELD STRENGTH OF 50,000 PSI ON PIPE SIZES 16"-24" ROD AND NUT WILL HAVE MIN. YIELD STRENGTH OF 100,000 PSI
2. RODS HAVE 6" OF THREAD ON EACH END
3. ALL METAL TO BE CLEANED AND COATED WITH AN APPROVED PROTECTIVE COATING FOLLOWING INSTALLATION AND PRIOR TO BACKFILLING, SEE NOTE 3, DWG. NO. 127

	PIPE SIZE	ROD DIA.	NO. RODS	TOTAL THRUST (Lbs)
TEES, PLUGS & VALVES	6"	3/4"	2/3	5,665
	8"	3/4"	2/3	10,055
	10"	3/4"	3	15,710
	12"	3/4"	4	22,620
	14"	3/4"	6	30,800
	16"	3/4"	4	40,215
	20"	3/4"	6	62,835
	24"	3/4"	8	90,480
	30"	1"	6	141,375
	36"	1"	6	203,595
11¼° B	6"	3/4"	2	1,110
	8"	3/4"	2	1,970
	10"	3/4"	2	3,080
	12"	3/4"	2	4,435
	14"	3/4"	2	6,035
	16"	3/4"	2	7,885
	20"	3/4"	2	12,320
	24"	3/4"	2	17,740
	30"	1"	2	27,720
	36"	1"	2	39,910
22½° B	6"	3/4"	2	2,210
	8"	3/4"	2	3,925
	10"	3/4"	2	6,130
	12"	3/4"	2	8,825
	14"	3/4"	2	12,015
	16"	3/4"	2	15,690
	20"	3/4"	2	24,515
	24"	3/4"	2	35,305
	30"	1"	2	55,160
	36"	1"	2	79,435
45° B	6"	3/4"	2/3	4,430
	8"	3/4"	2/3	7,700
	10"	3/4"	2	12,025
	12"	3/4"	4	17,312
	14"	3/4"	4	23,565
	16"	3/4"	4	30,780
	20"	3/4"	4	48,090
	24"	3/4"	6	69,200
	30"	1"	4	108,205
	36"	1"	6	155,810
90° B	6"	3/4"	2/3	8,000
	8"	3/4"	3	14,220
	10"	3/4"	4	22,414
	12"	3/4"	6	32,000
	14"	3/4"	6	43,400
	16"	3/4"	6	56,610
	20"	3/4"	6	87,890
	24"	3/4"	9	127,360
	30"	1"	6	199,000
	36"	1"	6	287,900

FULTON COUNTY STANDARD DETAIL 126 THRUST RESTRAINTS: TIE ROD CHART	DATE / R/DS / REVISIONS / MRR	DATE	REVISIONS	DGS/DRN/CHKD: CMS APPROVED: REW DATE: 12-2-05	FULTON COUNTY	FULTON COUNTY PUBLIC WORKS 141 PRYOR ST. ATLANTA, GA. 30303 404-612-7400 FAX: 404-224-0498	DRAWING NO. 126

NYLOPLAST DRAIN BASIN WITH DOME GRATE

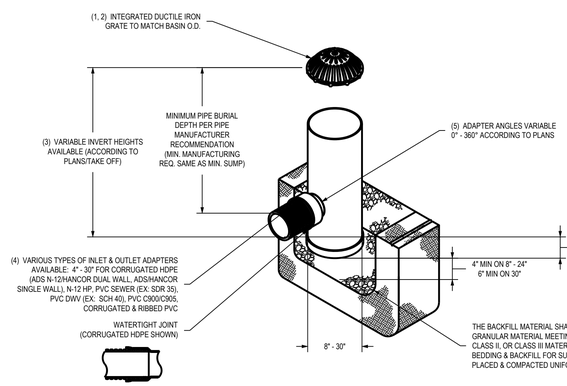

1 - 8" - 30" DOME GRATES SHALL BE DUCTILE IRON PER ASTM A536 GRADE 70-50-05.
2 - 8" & 10" DOME GRATES FIT ONTO THE DRAIN BASINS WITH THE USE OF A PVC BODY TOP. SEE DRAWING NO. 7001-110-045.
3 - DRAIN BASIN TO BE CUSTOM MANUFACTURED ACCORDING TO PLAN DETAILS. RISERS ARE NEEDED FOR BASINS OVER 84" DUE TO SHIPPING RESTRICTIONS. SEE DRAWING NO. 7001-110-065.
4 - DRAINAGE CONNECTION STUB JOINT TIGHTNESS SHALL CONFORM TO ASTM D3212 FOR CORRUGATED HDPE (ADS N-12/HANCOR DUAL WALL), N-12 HP, & PVC SEWER (4" - 24").
5 - ADAPTERS CAN BE MOUNTED ON ANY ANGLE 0° TO 360°. TO DETERMINE MINIMUM ANGLE BETWEEN ADAPTERS SEE DRAWING NO. 7001-110-012.
6 - 8" - 30" DOME GRATES HAVE NO LOAD RATING.

THIS PRINT DISCLOSES SUBJECT MATTER IN WHICH NYLOPLAST HAS PROPRIETARY RIGHTS. THE RECEIPT OR POSSESSION OF THIS PRINT DOES NOT CONFER, TRANSFER, OR LICENSE THE USE OF THE DESIGN OR TECHNICAL INFORMATION SHOWN HEREIN REPRODUCTION OF THIS PRINT OR ANY INFORMATION CONTAINED HEREIN, OR MANUFACTURE OF ANY ARTICLE HEREFROM, FOR THE DISCLOSURE TO OTHERS IS FORBIDDEN, EXCEPT BY SPECIFIC WRITTEN PERMISSION FROM NYLOPLAST.
©2013 NYLOPLAST

DRAWN BY	EBC	MATERIAL	Nyloplast	3130 VERONA AVE BUFORD, GA 30518 PHN (770) 932-2443 FAX (770) 932-2490 www.nyloplastus.com
DATE	03-25-10			
REVISED BY	MAH	PROJECT NO./NAME		TITLE: DRAIN BASIN WITH DOME GRATE QUICK SPEC INSTALLATION DETAIL
DATE	03-15-16			
DWG SIZE	A	SCALE 1:40	SHEET 1 OF 1	DWG NO. 7001-110-397 REV D

NYLOPLAST 12" DRAIN BASIN: 2812AG _ _ X

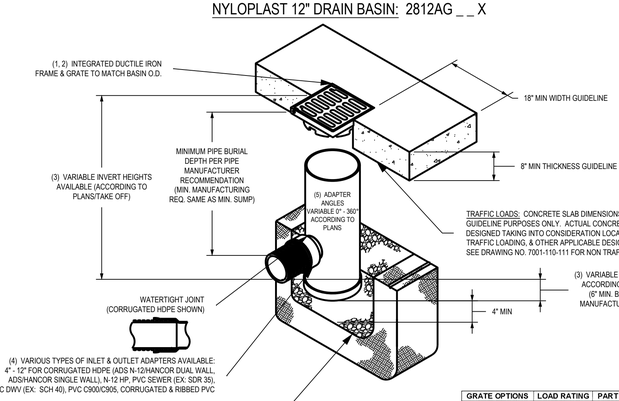

GRATE OPTIONS	LOAD RATING	PART #	DRAWING #
PEDESTRIAN	MEETS H-10	1299CGSP	7001-110-202
STANDARD	MEETS H-20	1299CGS	7001-110-203
SOLID COVER	MEETS H-20	1299CGC	7001-110-204
PEDESTRIAN BRONZE	N/A	1299CGSPB	7001-110-205
DOME	N/A	1299CGD	7001-110-206
DROP IN GRATE	LIGHT DUTY	1201DI	7001-110-021

1 - GRATES/SOLID COVER SHALL BE DUCTILE IRON PER ASTM A536 GRADE 70-50-05, WITH THE EXCEPTION OF THE BRONZE GRATE.
2 - FRAMES SHALL BE DUCTILE IRON PER ASTM A536 GRADE 70-50-05
3 - DRAIN BASIN TO BE CUSTOM MANUFACTURED ACCORDING TO PLAN DETAILS. RISERS ARE NEEDED FOR BASINS OVER 84" DUE TO SHIPPING RESTRICTIONS. SEE DRAWING NO. 7001-110-065
4 - DRAINAGE CONNECTION STUB JOINT TIGHTNESS SHALL CONFORM TO ASTM D3212 FOR CORRUGATED HDPE (ADS N-12/HANCOR DUAL WALL), N-12 HP, & PVC SEWER.
5 - ADAPTERS CAN BE MOUNTED ON ANY ANGLE 0° TO 360°. TO DETERMINE MINIMUM ANGLE BETWEEN ADAPTERS SEE DRAWING NO. 7001-110-012.

THIS PRINT DISCLOSES SUBJECT MATTER IN WHICH NYLOPLAST HAS PROPRIETARY RIGHTS. THE RECEIPT OR POSSESSION OF THIS PRINT DOES NOT CONFER, TRANSFER, OR LICENSE THE USE OF THE DESIGN OR TECHNICAL INFORMATION SHOWN HEREIN REPRODUCTION OF THIS PRINT OR ANY INFORMATION CONTAINED HEREIN, OR MANUFACTURE OF ANY ARTICLE HEREFROM, FOR THE DISCLOSURE TO OTHERS IS FORBIDDEN, EXCEPT BY SPECIFIC WRITTEN PERMISSION FROM NYLOPLAST.
©2013 NYLOPLAST

DRAWN BY	EBC	MATERIAL	Nyloplast	3130 VERONA AVE BUFORD, GA 30518 PHN (770) 932-2443 FAX (770) 932-2490 www.nyloplastus.com
DATE	03-29-06			
REVISED BY	MAH	PROJECT NO./NAME		TITLE: 12 IN DRAIN BASIN QUICK SPEC INSTALLATION DETAIL
DATE	03-11-16			
DWG SIZE	A	SCALE 1:20	SHEET 1 OF 1	DWG NO. 7001-110-189 REV E

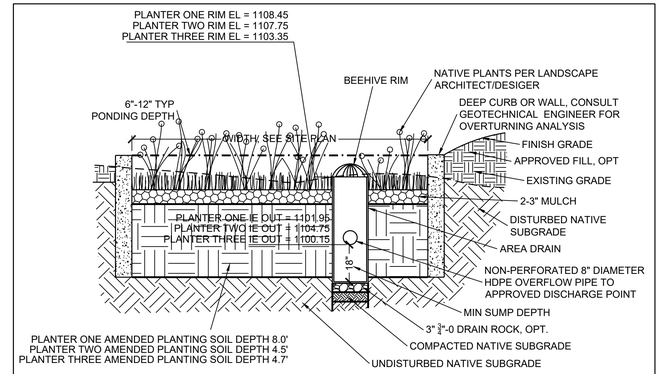

INFILTRATION PLANTER WITH PLANTING SOIL NOTES

DESIGN NOTES:
1. PLANT WITH PLANTS PER LANDSCAPE ARCHITECT DWGS. NATIVE PLANTS ARE PREFERRED, BECAUSE NON-NATIVE AND INVASIVE SPECIES CAN MOVE DOWNSTREAM AND DAMAGE HABITAT. IF NON-NATIVES ARE CHOSEN, BE SURE THAT THEY WILL NOT DAMAGE DOWNSTREAM HABITAT.

CONSTRUCTION NOTES:
2. BUILD AND VEGETATE PLANTER AS EARLY AS POSSIBLE TO ESTABLISH PLANTINGS BEFORE DIRECTING STORMWATER RUNOFF TO IT OR DIVERT STORMWATER AROUND FACILITY. PREFERABLY, THIS PERIOD WOULD LAST A MINIMUM OF 3 MONTHS.
3. INFILTRATION AREAS (THE AREA OF THE PLANTER AS DEFINED BY THE TOP ELEVATION OF THE FACILITY) SHALL BE FENCED OFF FROM THE FIRST DAY OF EARTH MOVING UNTIL PROJECT COMPLETION TO PREVENT COMPACTION OF THE SUBGRADE, DIRT TRACKING ONTO ANY LAYER OF THE FACILITY AND STOCKPILING OF CONSTRUCTION MATERIALS THAT MAY CLOG THE SURFACE.
4. DURING EXCAVATION OF NATIVE SOILS TO THE BOTTOM OF THE FACILITY, RAINFALL MAY CAUSE FINES TO CLOG THE SURFACE OF THE FACILITY. IF THE NATIVE SOIL HAS BEEN EXPOSED TO RAINFALL, HAND RAKE THE SURFACE TO A DEPTH OF 3" TO RESTORE INFILTRATION CAPACITY.
5. DURING AREA DRAIN INSTALLATION, DISTURB NATIVE SOILS AS LITTLE AS POSSIBLE.

AMENDED PLANTING SOIL MIX SPECIFICATIONS

1. AMENDED PLANTING SOIL MIX SHALL HAVE THE FOLLOWING CHARACTERISTICS:
   a. 60% LOAMY SAND AND 40% COMPOST.
   b. ORGANIC CONTENT MATTER FROM 8-10% BY WEIGHT
   c. CATION EXCHANGE CAPACITY (CEC) GREATER THAN OR EQUAL TO 5 MILLIEQUIVALENTS/100 GRAMS OF DRY SOIL
   d. 2-5% MINERAL FINES CONTENT
   e.

US STANDARD SIEVE SIZE	PERCENT PASSING
¾"	100
#4	95-100
#10	75-90
#40	25-40
#100	4-10
#200	2-5

   f. MINIMUM LONG-TERM HYDRAULIC CONDUCTIVITY OF 1 INCH/HOUR PER ASTM D2434 AT 85% COMPACTION PER ASTM D 1557.
   g. MAXIMUM IMMEDIATE HYDRAULIC CONDUCTIVITY OF 12 INCHES/HOUR.
2. AMENDED PLANTING SOIL MIX MAY BE CREATED BY TESTING ON-SITE NATIVE SOILS AND MIXING MATERIALS FROM OFF-SITE AS NEEDED TO ACHIEVE THE CHARACTERISTICS DESCRIBED IN NOTE 1 ABOVE.
3. AMENDED PLANTING SOIL MIX SHOULD BE UNIFORMLY MIXED WITH A SOIL MIXER.
4. PLACEMENT OF AMENDED PLANTING SOIL MIX SHALL OCCUR PER THE FOLLOWING GUIDELINES:
   a. PLACE SOIL IN 12" LIFTS, KEEPING MACHINERY OUTSIDE OF INFILTRATION AREA.
   b. DO NOT PLACE SOILS IF SATURATED.
   c. COMPACT EACH LIFT WITH WATER OR BOOT PACKING UNTIL JUST SATURATED TO 85% COMPACTION. DO NOT COMPACT WITH HEAVY MACHINERY OR VIBRATORY COMPACTION.

Infiltration Planter With Planting Soil

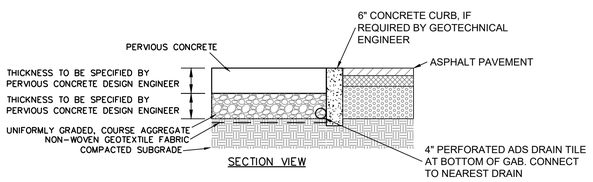

PERVIOUS CONCRETE DETAIL

NOT TO SCALE

NOTE TO OWNER:
1. CONTRACTOR TO SUBMIT PERVIOUS CONCRETE DESIGN AND SPECIFICATIONS TO OWNERS GEOTECHNICAL ENGINEER FOR REVIEW AND APPROVAL.
2. PERVIOUS CONCRETE DESIGN ENGINEER TO MEET OR EXCEED AMERICAN CONCRETE INSTITUTE REQUIREMENTS FOR PERVIOUS CONCRETE.
3. THICKNESS OF AGGREGATE BASE AND PERVIOUS CONCRETE TO BE BASED ON GEOTECHNICAL DATA.

GEOTECHNICAL ENGINEER RECOMMENDATIONS FOR PERVIOUS CONCRETE:
6-INCH SECTION FOR DRIVE LANES AND 4-INCH FOR PARKING SPACES. COMPRESSIVE STRENGTH OF 4000 PSI. NO REQUIREMENT FOR ADDITIONAL STONE MORE THAN THE AMOUNT NEEDED FOR STORMWATER MANAGEMENT PURPOSES.

STORMWATER MANAGEMENT MINIMUM STONE THICKNESS FOR INFILTRATION = 3 INCHES

CONTRACTOR TO SUBMIT PERVIOUS CONCRETE DESIGN AND SPECIFICATIONS TO OWNERS GEOTECHNICAL ENGINEER FOR REVIEW AND APPROVAL.

PERVIOUS CONCRETE PAVEMENT NOTES

1. TO PREVENT LONG-TERM CLOGGING, GRADING PLAN SHALL REFLECT THAT LANDSCAPE AREAS DO NOT DRAIN TOWARDS PERVIOUS PAVEMENT AREA.
2. A FIELD TEST SHOWING THAT NATIVE SOILS WILL HAVE MINIMUM DESIGN INFILTRATION RATE OF 0.1 INCHES/HOUR SHALL BE SUBMITTED.
3. CONSULT A GEOTECHNICAL ENGINEER TO RECOMMEND A THICKNESS OF CONCRETE AND BASE ROCK BASED ON THE NATIVE SOILS IN A WET, UNCOMPACTED STATE AND THE TRAFFIC LOADING AND VOLUME.
4. THE GENERAL CONTRACTOR SHALL SUBMIT A NARRATIVE IDENTIFYING HOW PERVIOUS PAVEMENT SURFACES WILL BE PROTECTED FROM RECEIVING SEDIMENT DURING THE ENTIRE CONSTRUCTION PROJECT.
5. THE FULL EXTENT OF THE POROUS PAVEMENT SHALL BE FENCED OFF FROM THE FIRST DAY OF EARTH MOVING UNTIL PROJECT COMPLETION TO PREVENT COMPACTION OF THE SUBGRADE, TRACKING OF DIRT ONTO ANY LAYER OF THE FACILITY, AND STOCKPILING OF CONSTRUCTION MATERIALS THAT MAY CLOG THE SURFACE.
6. DURING EXCAVATION OF NATIVE SOILS TO THE BOTTOM OF THE FACILITY, RAINFALL MAY CAUSE FINES TO CLOG THE NATIVE SOIL SURFACE OF THE FACILITY. IF THE NATIVE SOIL HAS BEEN EXPOSED TO RAINFALL, HAND RAKE THE SURFACE TO A DEPTH OF 3" TO RESTORE INFILTRATION CAPACITY.
7. CALL THE PERVIOUS CONCRETE DESIGN ENGINEER, 24 HOURS IN ADVANCE OF CONSTRUCTING THIS FACILITY SO CONSTRUCTION OBSERVATION MAY BE PERFORMED TO IDENTIFY VARIATIONS IN THE FIELD THAT MAY AFFECT DESIGN AND VERIFY PROPER CONSTRUCTION.
8. AGGREGATE BASE COURSE SHALL BE DELIVERED CLEAN (2% WASH LOSS) AND WASHED ON-SITE TO REDUCE WASH LOSS TO 0.5%. THIS MAY BE DONE BY HOSING THE ROCK OFF WHILE STILL IN THE DELIVERY TRUCK OR AFTER STOCKPILING. SCOOP FROM THE TOP AND PLACE ROCK. HOSE OFF AS NEEDED AS THE PILE DIMINISHES SINCE FINES WILL MIGRATE TO LOWER LEVELS OF THE PILE.

MATERIALS SPECIFICATIONS

Base Course
1. All aggregates beneath the pavement surface shall meet the following:
   a. Maximum Wash Loss of 0.5%
   b. Minimum Durability Index of 35
   c. Maximum Abrasion of 10% for 100 revolutions and maximum of 50% for 500 revolutions
2. Unless otherwise approved by the Engineer, coarse aggregate for the groundwater infiltration rock trenches shall be uniformly graded with the following gradation (AASHTO number 3):

U.S. Standard Sieve Size	Percent Passing
2 ½" (63 mm)	100
2" (50 mm)	90-100
1 ½" (37.5 mm)	35-70
1" (25 mm)	0-15
½" (12.5 mm)	0-5

If the above gradation cannot be met, the following gradation (AASHTO size number 5) is acceptable with the approval of the Engineer and minimum void space of 40%:

U.S. Standard Sieve Size	Percent Passing
1 ½" (37.5 mm)	100
1" (25 mm)	90-100
¾" (19 mm)	20-55
½" (12.5 mm)	0-10
3/8" (9.5 mm)	0-5

B. Non woven geotextile (drainage filter fabric) shall conform to the following:
   1. Minimum flow rate of 95 gal/min/ft2 ASTM D-4491-85
   2. Grab tensile strength min 115 lb ASTM D-4632-86
   3. Burst strength min 150 psi ASTM D-3786-80a
   4. Puncture resistance min 45 lb ASTM D-4833-88
   5. Apparent opening size 60-90 U.S. Standard Sieve
   6. Non-woven geotextile shall be Mirafi 160N, or approved equal.

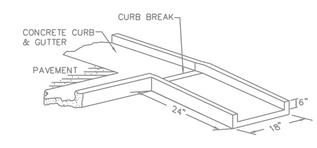

CONCRETE FLUME

NOT TO SCALE

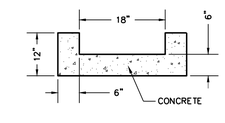

FLUME CROSS SECTION

NOT TO SCALE

BLUE LANDWORKS
CONSULTING ENGINEERS & SURVEYORS
LICENSE # PEF005518
LICENSE # LSF001044
5019 WEST BROAD STREET
SUITE M230
SUGAR HILL, GEORGIA 30518
TELEPHONE: (678) 804-8586
INFO@BLUELANDWORKS.COM
WWW.BLUELANDWORKS.COM

PREPARED FOR:
VILLAGE PARK SENIOR LIVING, LLC
1180 PEACHTREE ST NE SUITE 1700
ATLANTA, GA 30309
PHONE: 678 677-8600
CONTACT: BRYAN HODGSON
EMAIL: bryan@bpardesigns.com

GEORGIA REGISTERED No. 27067 PROFESSIONAL ENGINEER JONATHAN H. NIXOL

ISSUE #	DATE	REVISIONS
1	10/12/2021	SUBMIT FOR REVIEW

VILLAGE PARK MILTON
PHASE TWO
11940 ALPHARETTA HIGHWAY

PARCEL(S) 12-2340060056
CITY OF ALPHARETTA
LAND LOT 600, 1ST DISTRICT
FULTON COUNTY, GA
DRAWN: GC
CHECKED: JN

DETAILS

PROJECT# 2019.099

C-178

V:\2019-099 - 11940 Alpharetta Hwy\1000 - AutoCAD\30 - Construction\2019.099 IP Milton_DETAILS.dwg, C-178 10/7/2021 4:01 PM by Grant Crane

Erosion, Sedimentation, and Pollution Control Plan General Notes

(IN CONFORMANCE WITH GENERAL NPDES PERMIT NO. GAR 100003. IT IS HIGHLY RECOMMENDED THAT THE PERMITTEE READ AND UNDERSTAND THE TERMS AND CONDITIONS OF THE PERMIT.)

Project Data

(5) Primary Permittee: VILLAGE PARK SENIOR LIVING, LLC
3414 PEACHTREE ROAD NE, SUITE 730
ATLANTA GA 30326
(404) 271-8403
CONTACT: BRYAN HENDERSON (BRYAN@GALERIELIVING.COM)

Engineer: Blue Landworks LLC
5019 WEST BROAD STREET, SUITE M230
SUGAR HILL, GA 30518
(678) 804-8586

(2) Contact: John Nicol, PE (jn@bluelandworks.com)
GSWCC Level II Certification No. 14361 (expires 08-04-2024)

(4) **24-HOUR CONTACT:** BRYAN HENDERSON (BRYAN@GALERIELIVING.COM)
(404) 271-8403

(6) Total Gross Area: 4.90 acres
Total Disturbed Area: ±2.7 acres

(7) Construction Exit #1 GPS Location: 34.067418, -84.313858

(9) Existing Land Use / Site Description: Office building with parking lot and detention pond.
Proposed Land Use: Senior Living Development

Proposed Construction Activity: Clearing and grubbing, grading, paving, utility installation, and building construction.

(11) Name of Receiving Waters: Unnamed tributary of Foe Killer Creek
(22) **The project site is located within 1 linear mile upstream of the impaired stream segment of Foe Killer Creek**
(23) **(Reach ID R031300011003) per 2016 Integrated 305(b)/303(d) List. Criterion Violated: Fecal Coliform and Bio F.**
A TMDL Implementation Plan for sediment has not been finalized for Foe Killer Creek within the Chattahoochee River Basin.

(41) Area of On-Site Waters and Wetlands: There are NO State Waters on or within 200 feet of this site that will be
(42) impacted. There are NO known wetlands onsite per U.S. Fish & Wildlife Service National Wetland Inventory (NWI) maps. The Developer is responsible for contracting with a qualified wetland consultant to perform a wetlands delineation and USACE permitting, if necessary.

(45) Pre-Construction runoff coefficient/curve number = 82
Post-Construction runoff coefficient/curve number = 83

Design Professional's Certification:

(12) 1) I certify under penalty of law that this plan was prepared after a site visit to the locations described herein by myself or my authorized agent, under my supervision.

(13) 2) I certify that the permittee's Erosion, Sedimentation, and Pollution Control Plan provides for an appropriate and comprehensive system of best management practices required by the Georgia Water Quality Control Act and the document "Manual for Erosion and Sediment Control in Georgia" (Manual) published by the State Soil and Water Conservation Commission as of the January 1 of the year in which the land-disturbing activity was permitted, provides for the sampling of the receiving waters(s) or the sampling of the storm water outfalls and that the designed system of best management practices and sampling methods is expected to meet the requirements contained in the General NPDES Permit No. GAR 100003.

PROFESSIONAL ENGINEER JONATHAN H. NICOL

Signature 10/8/2021
Signed and Sealed Date

GSWCC Level II Certification No. 14361 (expires 08-04-2024)

DESIGN PROFESSIONAL 7-DAY VISIT CERTIFICATION

DATE OF INSPECTION _____
I certify the site was in compliance with the ESPCP Plan on the date of inspection.

GSWCC LEVEL II DESIGN PROFESSIONAL CERTIFICATION #

Inspection revealed the following discrepancies from the ESPCP Plan.

These deficiencies must be addressed immediately and a re-inspection scheduled. Work shall not proceed on the site until Design Professional Certification is obtained.

General Construction Specifications

1) All timber having a marketable value shall be salvaged. Timber logs, rubbish, and vegetative matter which will interfere with the grading operations or affect the planned stability of fill areas shall be removed and disposed of according to the permittee's instructions and in accordance with all local and state laws.
2) Topsoil is to be stripped and stockpiled in amounts necessary or available on site to complete final grading of all exposed areas.
3) Fill material is to be free of brush, rubbish, rocks, logs, and stumps in amounts that are detrimental to constructing stable fills.
4) Cut slopes which are to be topsoiled will be scarified to a minimum depth of 3 inches prior to placement of topsoil.
5) Compaction of fills will be as required to reduce slipping, erosion, or excess saturation.
6) Frozen mixtures of soft, mucky, or easily compressible materials are not to be incorporated in fills intended to support buildings, parking lots, roads, structures, sewers, or conduits.
7) Consult the geotechnical engineer for recommendations concerning proper placement and compaction of structural fill.
8) All disturbed areas shall be left with a neat and finished appearance and stabilized with the appropriate permanent protective cover.
9) Cut or fill slopes to be no greater than 2 feet horizontal to 1 foot vertical.
10) All proposed grades shown are finished rough grades, unless otherwise noted.
11) All construction shall conform with the specifications, the details shown within these plans, and/or the current version of the "Manual for Erosion and Sediment Control in Georgia"

(15) NON-EXEMPT ACTIVITIES:
Non-exempt activities shall not be conducted within the 25 or 50-foot undisturbed stream buffers as measured from the point of wrested vegetation or within 25-feet of the coastal marshland buffer as mentioned from the Jurisdictional Determination Line without first acquiring the necessary variances and permits.

(16) **There are no buffer encroachments; no buffer variances required.**

(17) AMENDMENTS/REVISIONS:
Amendments/revisions to the ES&PC Plan which have a significant effect on BMPs with a hydraulic component must be certified by the design professional.

(18) WASTE MATERIALS:
Waste materials shall not be discharged to waters of the State, except as authorized by a section 404 permit.

(19) STABILIZATION MEASURES:
The escape of sediment from the site shall be prevented by the installation of erosion and sediment control measures and practices prior to land disturbing activities.

(21) **Any disturbed area left exposed for a period of greater than 14 days shall be stabilized with mulch or temporary seeding.**

The stabilization measures shown on this Plan have been designed to stabilize the disturbed areas following the temporary or permanent completion of construction. All grubbed areas shall be stabilized with temporary mulching (Ds1) prior to grading if they are to remain inactive for 14 days or more. All disturbed areas shall be stabilized with temporary (Ds2) or permanent (Ds3) vegetation as indicated on the plan. Ditches, temporary diversion berms, and slopes (which have 3:1 or steeper slope and 10 feet or more height) are to be stabilized with channel stabilization (Ch) and slope stabilization (Ss). Dust control (Du) shall also be provided as needed during grading activities.

(20) MAINTENANCE:
Erosion control measures will be maintained at all times. If the full implementation of the approved plan does not provide for effective erosion control, additional erosion and sediment control measures shall be implemented to control or treat the sediment source. Refer to the details contained within this Plan for additional maintenance instruction.

(29) PETROLEUM SPILL AND LEAK CLEANUP CONTROL PRACTICES:
(26)
(1) Local, State, and manufacturer's recommended methods for spill cleanup shall be clearly posted and procedures shall be made available to site personnel.
(2) Material and equipment necessary for spill cleanup shall be kept in the material storage areas.
(3) Spill prevention practices and procedures shall be reviewed after a spill and adjusted as necessary to prevent future spills.
(4) All spills will be cleaned immediately upon discovery. All spills shall be reported as required by local, State and Federal regulations.
(5) The discharge of hazardous substances or oil in the storm water discharge(s) from a site shall be prevented.
(6) Where a release containing a hazardous substance in an amount equal to or in excess of a reporting quantity established under either Georgia's Oil or Hazardous Material Spills or Release Act (O.C.G.A. Sec. 12-14-2, et seq.), 40 CFR 117, or 40 CFR 302 occurs during a 24-hour period, the permittee is required to notify EPD at (404) 656-4863 or (800) 241-4113 and the National Response Center (NRC) at (800) 424-8802 in accordance with the requirements of Georgia's Oil or Hazardous Material Spills or Releases Act (O.C.G.A. Sec. 12-14-2, et seq.), 40 CFR 117, and 40 CFR 302 as soon as he has knowledge of the discharge.
(7) For spills that impact surface water (leave a sheen on surface water) or spills of an unknown amount, the National Response Center (NRC) shall be contacted within 24 hours at (800) 424-8802.
(8) For spills greater than 25 gallons and no surface water impacts, the Georgia EPD shall be contacted within 24 hours at (404) 656-4863 or (800) 241-4113.
(9) For spills less than 25 gallons and no surface water impacts, the spill shall be cleaned and local agencies shall be contacted as required.
(10) General NPDES Permit No. GAR 100001 does not authorize the discharge of hazardous substances or oil resulting from an on-site spill.

(28) PRODUCT SPECIFIC PRACTICES:
Petroleum Based Products - Containers for products such as fuels, lubricants, and tars will be inspected daily for leaks and spills. This includes onsite vehicle and machinery daily inspections and regular preventative maintenance of such equipment. Equipment maintenance areas will be located away from State Waters, natural drains, and storm water drainage inlets. In addition, temporary fueling tanks shall have a secondary containment liner to prevent/minimize site contamination. Discharge of oils, fuels, and lubricants is prohibited. Proper disposal methods will include collection in a suitable container and disposal as required by local and State regulations.

Paints/Finishes/Solvents - All products will be stored in tightly sealed original containers when not in use. Excess product will not be discharged to the storm water collection system. Excess product, materials used with these products, and product containers will be disposed of according to manufacturer's specifications and recommendations.

Concrete Truck Washing - NO concrete trucks will be allowed to wash out or discharge surplus concrete or drum wash water onsite.

Fertilizer/Herbicides - These products will be applied at rates that do not exceed the manufacturer's specifications or above the guidelines set forth in the crop establishment or in the GSWCC Manual for Erosion and Sediment Control in Georgia. Any storage of these materials will be under roof in sealed containers.

Building Materials - No building or construction materials will be buried or disposed of onsite. All such material will be disposed of in proper waste disposal procedures.

(24) CONCRETE WASHDOWN

Washout of the drum at the construction site is prohibited. Following is a procedure to washdown tools, chute and hopper:
1. Coordinate with site superintendent to excavate a pit deep enough to contain washdown water.
2. Back in equipment.
3. Washdown only the chute, hopper and rear of the vehicle, do not wash out the drum.
4. Make sure washdown water goes into and stays in the pit.
5. Coordinate with site superintendent to fill in pit and smooth out ground.

WASTE MATERIALS AND DISPOSAL:
Waste Disposal: No solid materials, including building materials, shall be discharged to waters of the State, except as authorized by a Section 404 permit.

All waste materials shall be collected and stored in a securely lidded metal dumpster or other appropriate waste management facility permissible under GAR permit No. 100001. Waste management facilities shall meet all solid waste management regulations. All trash and construction debris from the site shall be deposited in the waste management facilities. Waste management facilities shall be emptied a minimum of once per week or more often if necessary and trash shall be hauled as required by local regulations. No construction waste shall be buried on-site.

All personnel shall be instructed on proper procedures for waste disposal. A notice stating these practices shall be posted at the job site and the Contractor shall be responsible for seeing that these procedures are followed.

HAZARDOUS WASTES:
All hazardous waste materials shall be disposed of in the manner specified by local, state, and/or federal regulations and by the manufacturer of such products. The job site superintendent, who will also be responsible for seeing that these practices are followed, shall instruct site personnel in these practices. Material Safety Data Sheets (MSDS's) for each substance with hazardous properties that is used on the job site shall be obtained and used for the proper management of potential wastes that may result from these products. An MSDS shall be posted in the immediate area where such product is stored and/or used and another copy of each MSDS shall be maintained in the ESPCP file at the job site construction trailer office. Each employee who handles a substance with hazardous properties will be instructed on the use of MSDS sheets and the specific information in the applicable MSDS for the product he/she is using, particularly regarding spill control.

No spilled hazardous materials or hazardous wastes shall be allowed to come in contact with storm water discharges. If such contact occurs, the storm water discharge shall be contained on site until appropriate measures in compliance with state and federal regulations are taken to dispose of such contaminated storm water.

NON-STORM WATER DISCHARGES:
Except for flows from fire fighting activities, sources of non-storm water listed in Part III.A.2. of this permit that are combined with storm water discharges associated with construction activity must be identified in the Plan. The Plan shall identify and ensure the implementation of appropriate pollution prevention measures for the non-storm water component(s) of the discharge.

CRITICAL WORK ZONE:
All slopes 2:1 or steeper and higher than 5 feet shall receive surface roughening, polymers, and erosion control matting. Additionally, all slopes shall receive a diversion dike and temporary down drains along the top of the slope preventing drainage spilling over the edge and down the face of the slope. The temporary down drains shall be constructed with perforated stand pipes at the top of the slope and reconstructed as the slope increases in height.

KEEPING THE PLANS CURRENT:
The primary permittee(s), as applicable, who began construction on or before the effective date of this permit shall amend their Plan whenever their is a change in design, construction, operation, or maintenance, which has significant effect on BMPs with a hydraulic component, i.e., those BMPs where the design is based upon rainfall intensity, duration and return frequency of storms or on the potential for the discharge of pollutants to the waters of Georgia and which has not otherwise been addressed in the Plan, if the Plan proves to be ineffective in eliminating or significantly minimizing pollutants from sources identified under Part IV.D.2 of this permit, or if the plan proves to be ineffective in achieving the general objectives of controlling pollutants in storm water discharges associated with construction activity. Amendments to the Plan must be certified by a design professional.

OFFSITE VEHICLE TRACKING
A stabilized construction exit (Co) shall be provided to reduce vehicle tracking of sediment. See ESPCP plan sheets for the construction exit locations and detail. The paved street adjacent to the construction exit shall be inspected daily for tracking of mud, dirt, or rock. Dump trucks hauling material from the construction site shall be covered with a tarpaulin.

SANITARY WASTES:
All permittees shall ensure that this Plan is in compliance with applicable State and/or local waste disposal, and sanitary sewer or septic system regulations.

A minimum of one portable sanitary unit shall be provided for every ten (10) workers on the site. All sanitary waste shall be collected from the portable units a minimum of one time per week by a licensed portable facility provider in complete compliance with the local state regulations.

All sanitary waste units shall be located in an area where the likelihood of the unit contributing to storm water discharge is negligible. Additional containment of BMP's shall be implemented as necessary, such as gravel bags or specifically designed plastic skid containers around the base, to prevent waste from contributing to storm water discharges.

Sanitary sewer shall be provided by municipal authority at the completion of this project.

STORM WATER MANAGEMENT:
Storm water detention for the site will be provided by a proposed onsite stormwater management facility.

SEDIMENT STORAGE: Sediment storage will be provided by the proposed onsite stormwater management facility.

(27) POST-CONSTRUCTION STORM WATER POLLUTANT CONTROL:
A dry extended stormwater detention facility will serve as a water quality BMP's to control pollutants in storm water discharges that occur after construction operations have been completed. The facility has also been designed to detain the one-year channel protection volume and to provide peak flow attenuation. Storm outlet protection aprons shall be placed downstream of storm water discharge locations to provide non-erosive flow so that the natural, physical, and biological characteristics and functions of the watercourse are maintained and protected. The installation of these devices may be subject to Section 404 of the Federal Clean Water Act. The permittee is only responsible for the installation and maintenance of stormwater management devices prior to final stabilization of the site and is not responsible for the operation and maintenance of such structures after construction activities have been completed.

(27) STRUCTURAL PRACTICES:
(35) The structural practices shown on this Plan have been designed to divert flows from exposed soils, store flows, or otherwise limit runoff and the discharge of pollutants from exposed areas of the site. For sediment and erosion control purposes, structural practices have been shown in three different phases, based on construction activities. These phases include initial, intermediate grading and final stabilization.

There will be multiple construction exits on the project site during different phases. Prior to clearing the entire site, the proposed stormwater detention facility shall be constructed to serve as a water quality BMP. During the initial phase (Sheet ER-101), provide tree save fencing (Tr) and silt fence (Sd1-S) around the and within the limits of disturbance. A double row of silt fence (Sd1-S) will be installed along the property where run-off exits the site. Diversion berms (Di) will be constructed to divert stormwater flows into temporary sediment traps (Sd4-C), check dams (Cd-S) will be installed in existing draw locations, and channel stabilization (Ch) will be provided in the locations indicated to protect again erosive velocities.

During the intermediate grading phase (Sheet ER-102), storm drainage systems will be installed. Floating surface skimmers (Sk) will be connected to the outlet control structures (at the water quality orifice location) in the detention ponds to dewater from the surface. Building pads, drives and parking areas will be brought to subgrade. Excavated inlet sediment traps (Sd2-G) will be installed at storm drainage inlets to prevent sediment from entering the drainage system. Storm outlet protection (St) will be installed at the outfall locations.

During the final grading phase (Sheet ER-103), fine grading will occur and pavement will be provided. Inlet sediment traps (Sd2-P) will be installed at drainage inlets once pavement has been installed. All non-paved disturbed areas shall receive permanent seed (Ds3) or sod (Ds4) as indicated. Silt shall be removed from the existing detention facility. Once permanent vegetation has been established silt fence and other temporary erosion controls will be removed.

RECORD OF DATES - MAJOR GRADING ACTIVITIES
(30) (Note to primary, secondary, and tertiary permittees: complete the following table to include the dates when initial construction activities commence, when all major construction activities (e.g. clearing and grubbing activities, excavation activities, grading activities, infrastructure activities, intermediate and final stabilization activities) occur, when construction activities temporarily or permanently cease on a portion of the site, and when stabilization measures are initiated. The licensed professional who prepared this plan shall be notified when this table is amended.)

DATE	DESCRIPTION OF CONSTRUCTION ACTIVITY

(22) **The primary permittees ES&PC Plan is to be provided to each secondary permittee prior to the secondary conducting any construction activity and that each secondary shall sign the Plan or portion of the Plan applicable to their site.**

The primary permittee must provide a copy of the Plan or applicable portions of the Plan and copy of the primary permittees most current Notice of Intent to each secondary permittee prior to the secondary permittee conducting any construction activity. Any revisions to the Plan and/or the Notice of Intent must be provided to the secondary permittees in a timely manner. A written acknowledgment of receipt of the Plan and Notice of Intent must be made by the secondary permittee and a copy of such be retained in the primary permittee's records in accordance with Part IV.F. of this permit. If the primary permittee changes after the Plan is prepared and implemented, any subsequent primary permittee must ensure that the Plan complies with all terms and conditions of this permit and that each secondary permittee is provided with any revisions to the Plan and Notice of Intent made by the new primary permittee. A written acknowledgment of receipt of the Plan or amendments to the Plan and Notice of Intent must be made by the secondary permittee and a copy of such be retained in the new primary permittee's records in accordance with Part IV.F. of the NPDES Permit No. GAR 100003.

Secondary permittees are unknown at the time of plan submittal. Secondary permittees shall be identified prior to NOT.

SECONDARY PERMITTEES

NAME Phone:
Company Fax:
Address
Address _____
GSWCC LEVEL IA CERTIFICATION NO. _____ Signature

NAME Phone:
Company Fax:
Address
Address _____
GSWCC LEVEL IA CERTIFICATION NO. _____ Signature

NAME Phone:
Company Fax:
Address
Address _____
GSWCC LEVEL IA CERTIFICATION NO. _____ Signature

ANTICIPATED CONSTRUCTION SCHEDULE

START DATE: 12/1/21
END DATE: 6/1/22

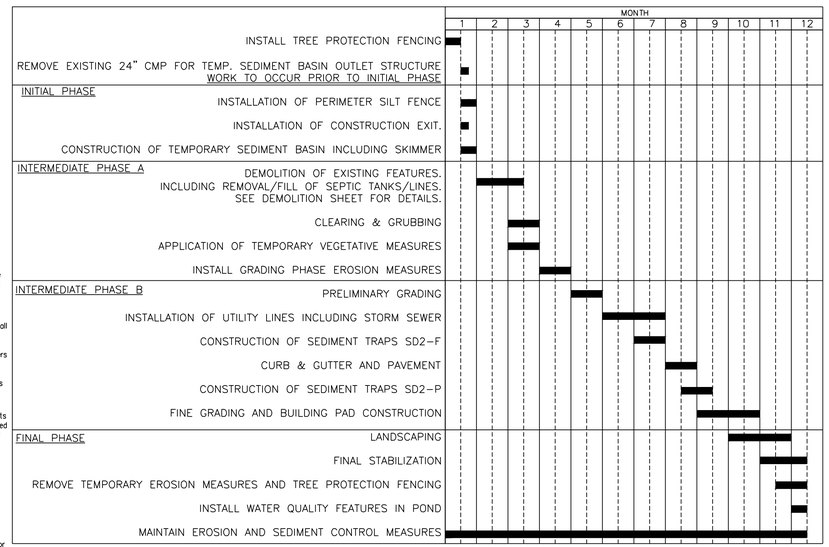

(28)(35) **ACTIVITY SCHEDULE**

SESPC NOTES:

A) (ESCO 5.3.2f) THE ESCAPE OF SEDIMENT FROM THE SITE SHALL BE PREVENTED BY THE INSTALLATION OF EROSION AND SEDIMENT CONTROL MEASURES AND PRACTICES PRIOR TO, OR CONCURRENT WITH LAND-DISTURBING ACTIVITIES.

B) (ESCO 5.3.2j) EROSION CONTROL MEASURES WILL BE MAINTAINED AT ALL TIMES. IF FULL IMPLEMENTATION OF THE APPROVED PLAN DOES NOT PROVIDE FOR EFFECTIVE EROSION CONTROL, ADDITIONAL EROSION AND SEDIMENT CONTROL MEASURES SHALL BE IMPLEMENTED TO CONTROL OR TREAT THE SEDIMENT SOURCE.

C) SEDIMENT STORAGE MAINTENANCE INDICATORS MUST BE INSTALLED IN SEDIMENT STORAGE STRUCTURES, INDICATING THE 1/3 FULL VOLUME.

D) (ESCO 5.3.4) MAINTENANCE OF ALL SOIL EROSION AND SEDIMENTATION CONTROL MEASURES AND PRACTICES, WHETHER TEMPORARY OR PERMANENT SHALL BE AT ALL TIMES THE RESPONSIBILITY OF THE PROPERTY OWNER.

E) THE SOIL EROSION AND SEDIMENT CONTROL ORDINANCE REQUIRES THAT A 25 STATE AND 50 FOOT CITY UNDISTURBED BUFFER ADJACENT TO ALL STATE WATERS BE MAINTAINED. EXCEPTION IS GRANTED TO HOMEOWNERS WHO PERFORM MINOR LAND DISTURBING ACTIVITIES SUCH AS HOME LANDSCAPING, HOME GARDENS, REPAIRS AND MAINTENANCE WORK.

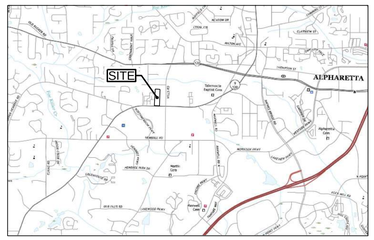
SITE
ALPHARETTA
GEORGIA 400
MCGINNIS FERRY ROAD
BOZZARD'S LANDING
MARKET PLACE
BOZZARD'S LANDING
HAYNES BRIDGE ROAD
WEBB BRIDGE ROAD
MAYFIELD ROAD
MAYFIELD ROAD
JONES BRIDGE ROAD
JONES BRIDGE ROAD
MORNING DOVE CIRCLE
MORNING DOVE CIRCLE
MORNING DOVE CIRCLE

THE FOLLOWING NOTES HAVE BEEN TAKEN DIRECTLY FROM THE AUTHORIZATION TO DISCHARGE UNDER THE NATIONAL POLLUTANT DISCHARGE ELIMINATION SYSTEM STORM WATER DISCHARGES ASSOCIATED WITH CONSTRUCTION ACTIVITY FOR COMMON DEVELOPMENTS GENERAL PERMIT NO. GAR100003.

PART III.D MANAGEMENT PRACTICES AND PERMIT VIOLATIONS

1. Best management practices, as set forth in this permit, are required for all construction activities, and must be implemented in accordance with the design specifications contained in the "Manual for Erosion and Sediment Control in Georgia" (Manual) published by the State Soil and Water Conservation Commission as of January 1 of the year in which the land-disturbing activity was permitted to prevent or reduce the pollution of waters of Georgia. Proper design, installation, and maintenance of best management practices shall constitute a complete defense to any action by the Director or to any other allegation of noncompliance with Part III.D.3. and Part III.D.4.

2. Except as required to install the initial sediment storage requirements and perimeter control BMPs as described in Part IV.D.3., the initial sediment storage requirements and perimeter control BMPs must be installed and implemented prior to conducting any other construction activities (e.g., clearing, grubbing and grading) within the construction site or when applicable, within phased sub-parts or segments of the construction site. Failure to comply shall constitute a violation of this permit for each day on which construction activities occur. The design professional who prepared the Plan must inspect the initial sediment storage requirements and perimeter control BMPs in accordance with Part IV.A.5. within seven (7) days after installation.

3. Failure to properly design, install, or maintain best management practices shall constitute a violation of this permit for each day on which such failure occurs. BMP maintenance as a result of the permittee's routine inspections shall not be considered a violation for the purposes of this paragraph. If during the course of the permittee's routine inspection BMP failures are observed which have resulted in sediment deposition into Waters of the State, the permittee shall correct the BMP failures and shall submit a summary of the violations to EPD in accordance with Part V.A.2. of this permit.

4. A discharge of storm water runoff from disturbed areas where best management practices have not been properly designed, installed, and maintained shall constitute a separate violation for each day on which such discharge results in the turbidity of receiving water(s) being increased by more than ten (10) nephelometric turbidity units for waters classified as trout streams or more than twenty-five (25) nephelometric turbidity units for waters supporting warm water fisheries, regardless of a permittee's certification under Part II.B.1.; and Part II.B.3.j.

5. When the permittee has elected to sample outfall(s), the discharge of storm water runoff from disturbed areas where best management practices have not been properly designed, installed, and maintained shall constitute a separate violation for each day on which such condition results in the turbidity of the discharge exceeding the value selected from Appendix B applicable to the construction site. As set forth therein, the nephelometric turbidity unit (NTU) value shall be selected from Appendix B based upon the size of the construction site, the surface water drainage area and whether the receiving water(s) supports warm water fisheries or is a trout stream as indicated in the Rules and Regulations for Water Quality Control, Chapter 391-3-6 at www.gaepd.org.

(29) PART IV.D.4. INSPECTIONS

a. Primary Permittee.

(1). Each day when any type of construction activity has taken place at a primary permittee's site, certified personnel provided by the primary permittee shall inspect: (a) all areas at the primary permittee's site where petroleum products are stored, used, or handled for spills and leaks from vehicles and equipment and (b) all locations at the primary permittee's site where vehicles enter or exit the site for evidence of off-site sediment tracking. These inspections must be conducted until a Notice of Termination is submitted.

(2). Measure rainfall once every 24 hours except any non-working Saturday, non-working Sunday and non-working Federal holiday until a Notice of Termination is submitted. Measurement of rainfall may be suspended if all areas of the site have undergone final stabilization or established a crop of annual vegetation and a seeding of target perennials appropriate for the region.

(3). Certified personnel (provided by the primary permittee) shall inspect the following at least once every seven (7) calendar days and within 24 hours of the end of a storm that is 0.5 inches rainfall or greater (unless such storm ends after 5:00 PM on any Friday or on any non-working Saturday, non-working Sunday or any non-working Federal holiday in which case the inspection shall be completed by the end of the next business day and/or working day, whichever occurs first): (a) disturbed areas of the primary permittee's construction site ; (b) areas used by the primary permittee for storage of materials that are exposed to precipitation ; and (c) structural control measures. Erosion and sediment control measures identified in the Plan applicable to the primary permittee's site shall be observed to ensure that they are operating correctly. Where discharge locations or points are accessible, they shall be inspected to ascertain whether erosion control measures are effective in preventing significant impacts to receiving water(s). For areas of a site that have undergone final stabilization or established a crop of annual vegetation and a seeding of target perennials appropriate for the region, the permittee must comply with Part IV.D.4.a.(4).. These inspections must be conducted until a Notice of Termination is submitted.

(4). Certified personnel (provided by the primary permittee) shall inspect at least once per month during the term of this permit (i.e., until a Notice of Termination is submitted to EPD) the areas of the site that have undergone final stabilization or established a crop of annual vegetation and a seeding of target perennials appropriate for the region. These areas shall be inspected for evidence of, or the potential for, pollutants entering the drainage system and the receiving water(s). Erosion and sediment control measures identified in the Plan shall be observed to ensure that they are operating correctly. Where discharge locations or points are accessible, they shall be inspected to ascertain whether erosion control measures are effective in preventing significant impacts to receiving water(s).

(5). Based on the results of each inspection, the site description and the pollution prevention and control measures identified in the Erosion, Sedimentation and Pollution Control Plan, the Plan shall be revised as appropriate not later than seven (7) calendar days following each inspection. Implementation of such changes shall be made as soon as practical but in no case later than seven (7) calendar days following each inspection. The primary permittee must amend the Plan in accordance with Part IV.D.4.b.(5), when a secondary permittee notifies the primary permittee of any Plan deficiencies.

(6). A report of each inspection that includes the name(s) of certified personnel making each inspection, the date(s) of each inspection, construction phase (i.e., initial, intermediate or final), major observations relating to the implementation of the Erosion, Sedimentation and Pollution Control Plan, and actions taken in accordance with Part IV.D.4.a.(5), of the permit shall be made and retained at the site or be readily available at a designated alternate location until the entire site or that portion of a construction project that has been phased has undergone final stabilization and a Notice of Termination is submitted to EPD. Such reports shall be readily available by end of the second business day and/or working day and shall identify all incidents of best management practices that have not been properly installed and/or maintained as described in the Plan. Where the report does not identify an incident, the inspection report shall contain a statement that the best management practices are in compliance with the Erosion, Sedimentation and Pollution Control Plan. The report shall be signed in accordance with Part V.G.2. of this permit.

b. Secondary Permittee.

(1). Each day when any type of construction activity has taken place at a secondary permittee's site, certified personnel provided by the secondary permittee shall inspect: (a) all areas used by the secondary permittee where petroleum products are stored, used, or handled for spills and leaks from vehicles and equipment; and (b) all locations at the secondary permittee site where that permittee's vehicles enter or exit the site for evidence of off-site sediment tracking. These inspections must be conducted until a Notice of Termination is submitted. This paragraph is not applicable to utility companies and utility contractors if they are secondary permittees.

(2). Certified personnel (provided by the utility companies and utility contractors if they are secondary permittees) shall inspect the following each day any type of construction activity has taken place at the construction site: (a) areas of the construction site disturbed by the utility companies and utility contractors that have not undergone final stabilization or established a crop of annual vegetation and a seeding of target perennials appropriate for the region; (b) areas used by the utility companies and utility contractors for storage of materials that are exposed to precipitation that have not undergone final stabilization or established a crop of annual vegetation and a seeding of target perennials appropriate for the region; and (c) structural control measures. Erosion and sediment control measures identified in the Plan applicable to the utility companies and utility contractors construction activities shall be observed to ensure that they are operating correctly. Where discharge locations or points are accessible, they shall be inspected to ascertain whether erosion control measures are effective in preventing significant impacts to receiving water(s). This paragraph is not applicable to utility companies and utility contractors when they are secondary permittees performing service line installations or when conducting repairs on existing line installations.

(3). Certified personnel (provided by the secondary permittee) shall inspect the following at least once every seven calendar days and within 24 hours of the end of a storm that is 0.5 inches rainfall or greater (unless such storm ends after 5:00 PM on any Friday or on any non-working Saturday, non-working Sunday or any non-working Federal holiday in which case the inspection shall be completed by the end of the next business day and/or working day, whichever occurs first): (a) disturbed areas of the secondary permittee's construction site ; (b) areas used by the secondary permittee for storage of materials that are exposed to precipitation ; and (c) structural control measures. Erosion and sediment control measures identified in the Plan applicable to the secondary permittee's site shall be observed to ensure that they are operating correctly. Where discharge locations or points are accessible, they shall be inspected to ascertain whether erosion control measures are effective in preventing significant impacts to receiving water(s). For areas of a site that have undergone final stabilization or established a crop of annual vegetation and a seeding of target perennials appropriate for the region, the permittee must comply with Part IV.D.4.b.(4). These inspections must be conducted until a Notice of Termination is submitted. This paragraph is not applicable to utility companies and utility contractors if they are secondary permittees.

(4). Certified personnel (provided by the secondary permittee) shall inspect at least once per month during the term of this permit (i.e., until a Notice of Termination is submitted to EPD) the areas of their sites that have undergone final stabilization or established a crop of annual vegetation and a seeding of target perennials appropriate for the region. These areas shall be inspected for evidence of, or the potential for, pollutants entering the drainage system and the receiving water(s). Erosion and sediment control measures identified in the Plan shall be observed to ensure that they are operating correctly. Where discharge locations or points are accessible, they shall be inspected to ascertain whether erosion control measures are effective in preventing significant impacts to receiving water(s).

(5). Based on the results of each inspection, the site description and the pollution prevention and control measures identified in the Erosion, Sedimentation and Pollution Control Plan, the Plan shall be revised as appropriate not later than seven (7) calendar days following each inspection. Implementation of such changes shall be made as soon as practical but in no case later than seven (7) calendar days following the inspection.

(6). A report of each inspection that includes the name(s) of certified personnel making each inspection, the date(s) of each inspection, construction phase (i.e., initial, intermediate or final), major observations relating to the implementation of the Erosion, Sedimentation and Pollution Control Plan, and actions taken in accordance with Part IV.D.4.c.(5) of the permit shall be made and retained at the site or be readily available at a designated alternate location until the entire site has undergone final stabilization and a Notice of Termination is submitted to EPD. Such reports shall be readily available by the end of the second business day and/or working day and shall identify all incidents of best management practices that have not been properly installed and/or maintained as described in the Plan. Where the report does not identify any incidents, the inspection report shall contain a certification that the best management practices are in compliance with the Erosion, Sedimentation and Pollution Control Plan. The report shall be signed in accordance with Part V.G.2. of this permit. This paragraph is not applicable to utility companies and utility contractors if they are secondary permittees performing only service line installations or when conducting repairs on existing line installations.

c. Tertiary Permittee.

(1). Each day when any type of construction activity has taken place at a tertiary permittee's site, certified personnel provided by the tertiary permittee shall inspect: (a) all areas used by the tertiary permittee where petroleum products are stored, used, or handled for spills and leaks from vehicles and equipment; and (b) all locations at the tertiary permittee site where that permittee's vehicles enter or exit the site for evidence of off-site sediment tracking. These inspections must be conducted until a Notice of Termination is submitted. This paragraph is not applicable to utility companies and utility contractors performing only service line installations or when conducting repairs on existing line installations.

(2) Measure rainfall once every 24 hours except any non-working Saturday, non-working Sunday and non-working Federal holiday until a Notice of Termination is submitted. Measurement of rainfall may be suspended if all areas of the site have undergone final stabilization or established a crop of annual vegetation and a seeding of target perennials appropriate for the region.

(3). Certified personnel (provided by the tertiary permittee) shall inspect at least the following once every seven calendar days and within 24 hours of the end of a storm that is 0.5 inches rainfall or greater (unless such storm ends after 5:00 PM on any Friday or on any non-working Saturday, non-working Sunday or any non-working Federal holiday in which case the inspection shall be completed by the end of the next business day and/or working day, whichever occurs first): (a) disturbed areas of the tertiary permittee's construction site ; (b) areas used by the tertiary permittee for storage of materials that are exposed to precipitation ; and (c) structural control measures. Erosion and sediment control measures identified in the Plan applicable to the tertiary permittee's site shall be observed to ensure that they are operating correctly. Where discharge locations or points are accessible, they shall be inspected to ascertain whether erosion control measures are effective in preventing significant impacts to receiving water(s). Where discharge locations or points are accessible, they shall be inspected to ascertain whether erosion control measures are effective in preventing significant impacts to receiving water(s). For areas of a site that have undergone final stabilization or established a crop of annual vegetation and a seeding of target perennials appropriate for the region, the permittee must comply with Part IV.D.4.c.(4). These inspections must be conducted until a Notice of Termination is submitted. This paragraph is not applicable to utility companies and utility contractors if they are secondary permittees.

(4). Certified personnel (provided by the tertiary permittee) shall inspect at least once per month during the term of this permit (i.e., until a Notice of Termination is submitted to EPD) the areas of their sites that have undergone final stabilization or established a crop of annual vegetation and a seeding of target perennials appropriate for the region. These areas shall be inspected for evidence of, or the potential for, pollutants entering the drainage system and the receiving water(s). Erosion and sediment control measures identified in the Plan shall be observed to ensure that they are operating correctly. Where discharge locations or points are accessible, they shall be inspected to ascertain whether erosion control measures are effective in preventing significant impacts to receiving water(s).

(5). Based on the results of each inspection, the secondary permittee must notify the primary permittee within 24-hours of any suspected BMP design deficiencies. The primary permittee must evaluate whether these deficiencies exist within 48-hours of such notice, and if these deficiencies are found to exist must amend the Plan in accordance with Part IV.C. of this permit to address those deficient BMPs within seven (7) days of being notified by the secondary permittee. When the Plan is amended, the primary permittee must notify and provide a copy of the amendment to all affected secondary permittee(s) within this seven (7) day period. The secondary permittees must implement any new Plan requirements affecting their site(s) within 48-hours of notification by the primary permittee.

(6). A report of each inspection that includes the name(s) of certified personnel making each inspection, the date(s) of each inspection, construction phase (i.e., initial, intermediate or final), major observations relating to the implementation of the Erosion, Sedimentation and Pollution Control Plan, and actions taken in accordance with Part IV.D.4.b.(5), of the permit shall be made and retained at the site or be readily available at a designated alternate location until the entire site has undergone final stabilization and a Notice of Termination is submitted to EPD. Such reports shall be readily available by the end of the second business day and /or working day and shall identify all incidents of best management practices that have not been properly installed and/or maintained as described in the Plan. Where the report does not identify any incidents, the inspection report shall contain a certification that the best management practices are in compliance with the Erosion, Sedimentation and Pollution Control Plan. The report shall be signed in accordance with Part V.G.2. of this permit. This paragraph is not applicable to utility companies and utility contractors if they are secondary permittees performing only service line installations or when conducting repairs on existing line installations.

PART IV.D.6. SAMPLING REQUIREMENTS

This permit requires the monitoring of nephelometric turbidity in receiving water(s) or outfalls in accordance with this permit. This section is applicable to primary permittees with a total planned disturbance equal to or greater than one (1) acre and tertiary permittees with a total planned disturbance equal to or greater than five (5) acres. This section is not applicable to secondary permittees. The following procedures constitute EPD's guidelines for sampling turbidity.

a. Sampling Requirements shall include the following:

(34) (1). A USGS topographic map, a topographic map or a drawing (referred to as a topographic map) that is a scale equal to or more detailed than a 1:24000 map showing the location of the site or the common development; (a) the location of all perennial and intermittent streams and other water bodies as shown on a USGS topographic map, and all other perennial and intermittent streams and other water bodies located during mandatory field verification, into which the storm water is discharged and (b) the receiving water and/or outfall sampling locations. When the permittee is chosen to use a USGS topographic map and the receiving water(s) is not shown on the USGS topographic map, the location of the receiving water(s) must be hand-drawn on the USGS topographic map from where the storm water(s) enters the receiving water(s) to the point where the receiving water(s) combines with the first blue line stream shown on the USGS topographic map;

(2). The analytical method used to collect and analyze the samples including quality control/quality assurance procedures. This narrative must include precise sampling methodology for each sampling location;

(3). When the permittee has determined that some or all outfalls will be sampled, a rationale must be included on the Plan for the NTU limit(s) selected from Appendix B. This rationale must include the size of the construction site, the calculation of the size of the surface water drainage area, and the type of receiving water(s) (i.e., trout stream or supporting warm water fisheries); and

(4). Any additional information EPD determines necessary to be part of the Plan. EPD will provide written notice to the permittee of the information necessary and the time line for submittal.

b. Sample Type. All sampling shall be collected by "grab samples" and the analysis of these samples must be conducted in accordance with methodology and test procedures established by 40 CFR Part 136 (unless other test procedures have been approved); the guidance document titled "NPDES Storm Water Sampling Guidance Document, EPA 833-B-92-001" and guidance documents that may be prepared by the EPD.

(1). Sample containers should be labeled prior to collecting the samples.

(2). Samples should be well mixed before transferring to a secondary container.

(3). Large mouth, clean and rinsed glass or plastic jars should be used for collecting samples. The jars should be cleaned thoroughly to avoid contamination.

(4). Manual, automatic or rising stage sampling may be utilized. Samples required by this permit should be analyzed immediately, but in no case later than 48 hours after collection. However, samples from automatic samplers must be collected no later than the next business day after their accumulation, unless flow through automated analysis is utilized. If automatic sampling is utilized and the automatic sampler is not activated during the qualifying event, the permittee must utilize manual sampling or rising stage sampling during the next (31) qualifying event. Dilution of samples is not required. Samples may be analyzed using a direct reading, properly calibrated turbidimeter. Samples are not required to be cooled.

(5). Sampling and analysis of the receiving water(s) or outfalls beyond the minimum frequency stated in this permit must be reported to EPD as specified in Part IV.E.

c. Sampling Points.

(1). For construction activities the primary permittee with a total planned disturbance equal to or greater than one (1) acre and tertiary permittee with a total planned disturbance equal to or greater than five (5) acres must sample all receiving water(s), or all outfall(s), or a combination of receiving water(s) and outfall(s). Samples taken for the purpose of compliance with this permit shall be representative of the monitored activity and representative of the water quality of the receiving water(s) and/or the storm water outfalls using the following minimum guidelines:

(a). The upstream sample for each receiving water(s) must be taken immediately upstream of the confluence of the first storm water discharge from the permitted activity the discharge farthest upstream at the site) but downstream of any other storm water discharges not associated with the permitted activity. Where appropriate, several upstream samples from across the receiving water(s) may need to be taken and the arithmetic average of the turbidity of these samples used for the upstream turbidity value.

(b). The downstream sample for each receiving water(s) must be taken downstream of the confluence of the last storm water discharge from the permitted activity (i.e., the discharge farthest downstream at the site) but upstream of any other storm water discharge not associated with the permitted activity. Where appropriate, several downstream samples from across the receiving water(s) may need to be taken and the arithmetic average of the turbidity of these samples used for the downstream turbidity value.

(c). Ideally the samples should be taken from the horizontal and vertical center of the receiving water(s) or the storm water outfall channel(s).

(d). Care should be taken to avoid stirring the bottom sediments in the receiving water(s) or in the outfall storm water channel.

(e). The sampling container should be held so that the opening faces upstream.

(f). The samples should be kept free from floating debris.

(g). Permittees do not have to sample sheetflow that flows onto undisturbed natural areas or areas stabilized by the project. For purposes of this section, stabilized shall mean, for unpaved areas and areas not covered by permanent structures and areas located outside the waste disposal limits of a landfill cell that has been certified by EPD for waste disposal, 100% of the soil surface is uniformly covered in permanent vegetation with a density of 70% or greater, or landscaped according to the Plan (uniformly covered with landscaping materials in planned landscaped areas),or equivalent permanent stabilization measures as defined in the Manual (excluding a crop of annual vegetation and seeding of target crop perennials appropriate for the region).

(h). All sampling pursuant to this permit must be done in such a way (including generally accepted sampling methods, locations, timing, and frequency) as to accurately reflect whether storm water runoff from the construction site is in compliance with the standard set forth in Parts III.D.3. or III.D.4., whichever is applicable.

d. Sampling Frequency.

(1). The primary permittee with a total planned disturbance equal to or greater than one (1) acre and tertiary permittee with a total planned disturbance equal to or greater than five (5) acres must sample in accordance with the Plan at least once for each rainfall event described below. For a qualifying event, the permittee shall sample at the beginning of any storm water discharge associated with construction activity or discharge from a monitored outfall within forty-five (45) minutes or as soon as possible. .

(2). However, where manual and automatic sampling are impossible (as defined in this permit), or are beyond the permittee's control, the permittee shall take samples as soon as possible, but in no case more than twelve (12) hours after the beginning of the storm water discharge.

(3). Sampling by the permittee shall occur for the following qualifying events:

(a). For each area of the site that discharges to a receiving water or from an outfall, the first rain event that reaches or exceeds 0.5 inch with a storm water discharge that allows for sampling during normal business hours as defined in this permit after all clearing and grubbing operations have been completed, but prior to completion of mass grading operations, in the drainage area of the location selected as the sampling location;

(b). In addition to (a) above, for each area of the site that discharges to a receiving water or from an outfall, the first rain event that reaches or exceeds 0.5 inch with a storm water discharge that occurs during normal business hours as defined in this permit either 90 days after the first sampling event or after all mass grading operations have been completed, but prior to submittal of a NOT, in the drainage area of the location selected as the sampling location, whichever comes first;

(c). At the time of sampling performed pursuant to (a) and (b) above, if BMPs in any area of the site that discharges to a receiving water or from an outfall are not properly designed, installed and maintained, corrective action shall be defined and implemented within two (2) business days, and turbidity samples shall be taken from discharges from that area of the site for each subsequent rain event that reaches or exceeds 0.5 inch during normal business hours until the selected turbidity standard is attained, or until post-storm event inspections determine that BMPs are properly designed, installed and maintained;

(d). Where sampling pursuant to (a), (b) or (c) above is required but not possible (or not required because there was no discharge), the primary permittee, in accordance with Part IV.D.4.a.(6)., or the tertiary permittee, in accordance with Part IV.D.4.c.(6)., must include a written justification in the inspection report of why sampling was not performed. Providing this justification does not relieve the permittee of any subsequent sampling obligations under (a), (b) or (c) above; and

(e). Existing construction activities, i.e., those that are occurring on or before the effective date of this permit, that have met the sampling required by (a) above shall sample in accordance with (b). Those existing construction activities that have met the sampling required by (b) above shall not be required to conduct additional sampling other than as required by (c) above.

*Note that the Permittee may choose to meet the requirements of (a) and (b) above by collecting turbidity samples from any rain event that reaches or exceeds 0.5 inch and allows for sampling at any time of the day or week.

PART IV.E. REPORTING

1. The applicable permittees are required to submit the sampling results to the EPD at the address shown in Part II.C. by the fifteenth day of the month following the reporting period. Reporting periods are months during which samples are taken in accordance with this permit. Sampling results shall be in a clearly legible format. Upon written notification, EPD may require the applicable permittee to submit the sampling results on a more frequent basis. Sampling and analysis of any storm water discharge(s) or the receiving water(s) beyond the minimum frequency stated in this permit must be reported in a similar manner to the EPD. The sampling reports must be signed in accordance with Part V.G.2. Sampling reports must be submitted to EPD until such time as a NOT is submitted in accordance with Part VI.

2. All sampling reports shall include the following information:

a. The rainfall amount, date, exact place and time of sampling or measurements;
b. The name(s) of the certified personnel who performed the sampling and measurements;
c. The date(s) analyses were performed;
d. The time(s) analyses were initiated;
e. The name(s) of the certified personnel who performed the analyses;
f. References and written procedures, when available, for the analytical techniques or methods used;
g. The results of such analyses, including the bench sheets, instrument readouts, computer disks or tapes, etc., used to determine these results;
h. Results which exceed 1000 NTU shall be reported as "exceeds 1000 NTU;" and
(34) i. Certification statement that sampling was conducted as per the Plan.

3. All written correspondence required by this permit shall be submitted by return receipt certified mail (or similar service) to the appropriate District Office of the EPD according to the schedule in Appendix A of this permit. The applicable permittees shall retain a copy of the proof of submittal at the construction site or the proof of submittal shall be readily available at a designated location from commencement of construction until such time as a NOT is submitted in accordance with Part VI. If an electronic submittal is provided by EPD then the written correspondence may be submitted electronically; if required, a paper copy must also be submitted by return receipt certified mail or similar service.

PART IV.F. RETENTION OF RECORDS

1. The primary permittee shall retain the following records at the construction site or the records shall be readily available at a designated alternate location from commencement of construction until such time as a NOT is submitted in accordance with Part VI:

a. A copy of all Notices of Intent submitted to EPD;
b. A copy of the Erosion, Sedimentation and Pollution Control Plan required by this permit;
c. The design professional's report of the results of the inspection conducted in accordance with Part IV.A.5. of this permit;
d. A copy of all sampling information, results, and reports required by this permit;
e. A copy of all inspection reports generated in accordance with Part IV.D.4.a. of this permit;
f. A copy of all violation summaries and violation summary reports generated in accordance with Part III.D.2. of this permit; and
g. Daily rainfall information collected in accordance with Part IV.D.4.a.(2). of this permit.

2. Each secondary permittee shall retain the following records at the construction site or the records shall be readily available at a designated alternate location from commencement of construction until such time as a NOT is submitted in accordance with Part VI:

a. A copy of all Notices of Intent submitted to EPD;
b. A copy of the Erosion, Sedimentation and Pollution Control Plan required by this permit or the applicable portion of the Erosion, Sedimentation and Pollution Control Plan for their activities at the construction site
(31) required by this permit;
c. A copy of all inspection reports generated in accordance with Part IV.D.4.b. of this permit; and
d. A copy of all violation summaries and violation summary reports generated in accordance with Part III.D.2. of this permit.

3. Each tertiary permittee shall retain the following records at the construction site or the records shall be readily available at a designated alternate location from commencement of construction until such time as a NOT is submitted in accordance with Part VI:

a. A copy of all Notices of Intent submitted to EPD;
b. A copy of the Erosion, Sedimentation and Pollution Control Plan required by this permit;

c. The design professional's report of the results of the inspection conducted in accordance with Part IV.A.5. of this permit;
d. A copy of all sampling information, results, and reports required by this permit;
e. A copy of all inspection reports generated in accordance with Part IV.D.4.c. of this permit;
f. A copy of all violation summaries and violation summary reports generated in accordance with Part III.D.2. of this permit; and.
g. Daily rainfall information collected in accordance with Part IV.D.4.c.(2). of this permit.
4. Copies of all Notices of Intent, Notices of Termination, inspection reports, sampling reports (including all calibration and maintenance records and all original strip chart recordings for continuous monitoring instrumentation) or other reports requested by the EPD, Erosion, Sedimentation and Pollution Control Plans, records of all data used to complete the Notice of Intent to be covered by this permit and all other records required by this permit shall be retained by the permittee who either produced or used it for a period of at least three years from the date that the NOT is submitted in accordance with Part VI of this permit. These records must be maintained at the permittee's primary place of business once the construction activity has ceased at the permitted site. This period may be extended by request of the EPD at any time upon written notification to the permittee.

CITY OF ALPHARETTA NOTES

1. THIS SITE DOES NOT CONTAIN ANY STATE WATERS OR WETLANDS.
2. SEDIMENT STORAGE VOLUME MUST BE IN PLACE PRIOR TO AND DURING ALL LAND DISTURBING ACTIVITIES UNTIL FINAL STABILIZATION OF THE SITE HAS BEEN ACHIEVED.
3. EROSION CONTROL MATTING SHALL BE INSTALLED ON ALL SLOPES 3:1 AND STEEPER.
4. APPROVED PLANS AND NPDES DAILY LOG MUST BE ON SITE AT ALL TIMES.
5. CONTRACTOR MUST ATTEND CITY OF ALPHARETTA PRE-CONSTRUCTION CLASS PRIOR TO SITE INITIATION.
6. TWO COPIES OF THE NPDES NOTICE OF INTENT MUST BE PROVIDED TO THE LAND DISTURBANCE INSPECTOR PRIOR TO INITIATING CONSTRUCTION.
7. ALL AREAS TO RECEIVE STRUCTURAL FILL TO BE CLEARED, STRIPPED AND FREE OF TOPSOIL, ROOTS, STUMPS, AND ALL OTHER DELETERIOUS MATERIAL. STRUCTURAL FILL TO BE CLEAN FROM ORGANICS AND ALL OTHER DELETERIOUS MATERIAL. FILL TO BE PLACED IN MAXIMUM 8"LIFTS AND COMPACTED TO AT LEAST 95% STANDARD PROCTOR MAXIMUM DENSITY AND TO WITHIN 3%+ OF THE OPTIMUM MOISTURE CONTENT, UNLESS OTHERWISE SPECIFIED IN THE PROJECT GEOTECHNICAL REPORT OR BY THE PROJECT GEOTECHNICAL ENGINEER. ALL FILL SOILS TO BE PLACED UNDER THE OBSERVATION OF THE PROJECT GEOTECHNICAL ENGINEER. DOCUMENTATION OF COMPACTION TESTING SHALL BE PROVIDED TO LAND DISTURBANCE ACTIVITY INSPECTOR FOR ALL ROADWAY CONSTRUCTION IN RIGHT-OF-WAY. (INCLUDING DECELERATION LANE) CONTACT LAND DISTURBANCE ACTIVITY INSPECTOR PRIOR TO CONSTRUCTION FOR FURTHER TESTING REQUIREMENTS.
8. FAILURE OF THE CONTRACTOR TO PERFORM THE PRESCRIBED EROSION CONTROL PRACTICES SHALL RESULT IN THE IMMEDIATE ISSUANCE OF A STOP-WORK ORDER FOR THE PROJECT SITE, PURSUANT TO UDC 3.1.1.F.2.D.
9. MAINTENANCE OF ALL SOIL EROSION AND SEDIMENTATION CONTROL PRACTICES, WHETHER TEMPORARY OR PERMANENT, SHALL BE THE RESPONSIBILITY OF THE OWNER.
10. ALL DISTURBED AREAS MUST BE VEGETATED WITHIN 14 DAYS OF FINAL GRADE.
11. ALL FILL SLOPES SHALL HAVE SILT FENCE AT THE TOE OF THE SLOPE.
12. THIS SITE DOES NOT CONTAIN ANY STATE WATERS OR WETLANDS.
13. THE ESCAPE OF SEDIMENT FROM THE SITE SHALL BE PREVENTED BY THE INSTALLATION OF EROSION AND SEDIMENT CONTROL MEASURES AND PRACTICES PRIOR TO, OR CONCURRENT WITH, LAND-DISTURBING ACTIVITIES.
14. EROSION CONTROL MEASURES WILL BE MAINTAINED AT ALL TIMES. IF FULL IMPLEMENTATION OF THE APPROVED PLAN DOES NOT PROVIDE FOR EFFECTIVE EROSION CONTROL, ADDITIONAL EROSION AND SEDIMENT CONTROL MEASURES SHALL BE IMPLEMENTED TO CONTROL OR TREAT THE SEDIMENT SOURCE.
15. THE CONTRACTOR SHALL REMOVE SEDIMENT ONCE IT HAS ACCUMULATED TO ONE-HALF THE ORIGINAL HEIGHT OF THE SILT FENCE USED FOR EROSION CONTROL.
16. MAXIMUM CUT OR FILL SLOPES ARE 2 HORIZONTAL: 1 VERTICAL.
17. ANY DISTURBED AREA LEFT EXPOSED FOR 14 DAYS SHALL BE STABILIZED WITH MULCH OR TEMPORARY SEEDING.
18. ALL SILT FENCE SHALL BE TYPE S.
19. THE CONSTRUCTION EXIT SHALL BE MAINTAINED IN A CONDITION, WHICH WILL PREVENT TRACKING OR FLOW OF MUD ONTO PUBLIC RIGHT-OF-WAY. THIS MAY REQUIRE PERIODIC TOP DRESSING WITH STONE, AS CONDITIONS DEMAND. (ALL MATERIALS SPILLED, DROPPED, WASHED, OR TRACKED FROM VEHICLE OR SITE ONTO ROADWAY OR INTO STORM DRAIN SYSTEM MUST BE REMOVED IMMEDIATELY BY SWEEPING.)
20. ALL STORM DRAINS AND DROP INLETS WILL HAVE 4' PERMANENT POLLUTION PREVENTION MARKERS INSTALLED PRIOR TO INSPECTION. MARKERS ARE AVAILABLE AT CITY OF ALPHARETTA COMMUNITY DEVELOPMENT DEPARTMENT 678-297-6070.
21. THE OWNER WILL MAINTAIN STORM WATER RUNOFF CONTROLS AT ALL TIMES. ADDITIONAL CONTROLS WILL BE INSTALLED IF DETERMINED NECESSARY BY CITY INSPECTION.
22. IRRIGATION SYSTEMS ARE NOT ALLOWED WITHIN THE PUBLIC RIGHT-OF-WAY.
23. AT LEAST ONE PERSON ON A PROJECT OR SITE MUST HAVE COMPLETED THE LEVEL 1A EROSION EDUCATION & TRAINING COURSE AND BE CERTIFIED BY GSWCC.
24. SUBCONTRACTORS MUST COMPLETE EITHER LEVEL 1A EROSION EDUCATION & TRAINING COURSE OR ATTEND SUBCONTRACTOR AWARENESS SEMINAR.
25. LANDSCAPING, FENCING, OR SAFETY BENCHES PER GEORGIA STORMWATER MANAGEMENT MANUEL REQUIRED AROUND STORMWATER MANAGEMENT FACILITIES.
26. THE CITY WILL REQUIRE A MAINTENANCE BOND TO REMAIN IN PLACE ON ALL PUBLIC IMPROVEMENTS (INCLUDING BUT NOT LIMITED TO CURB AND GUTTER, SIDEWALK, PAVEMENT AND BASE, PAVEMENT MARKINGS AND STREET SIGNS OR SIGNALIZATION, THE ENTIRE PROJECT STORM SYSTEM BOTH INSIDE AND OUTSIDE RIGHT-OF-WAY, DETENTION AND WATER QUALITY DEVICES) FOR A MINIMUM OF ONE (1) YEAR AFTER FINAL PLAT SIGN-OFF OR UNTIL THE FINAL CERTIFICATE OF OCCUPANCY IS ISSUED, WHICHEVER IS LONGER. THIS BOND SHOULD BE GRANTED FOR ONE-YEAR AND RENEWED UNTIL THE FINAL CERTIFICATE OF OCCUPANCY IS ISSUED.

SAMPLING NARRATIVE (35)

THERE IS ONE SAMPLING LOCATION FOR THIS PROJECT. OUTFALL SAMPLING POINT #1 IS LOCATED AT THE OUTLET STRUCTURE ON THE EXISTING 24" CMP STORM DRAINAGE LINE AT ALPHA BC PROPERTY LINE.

OUTFALL SAMPLING POINT #1 HAS A TOTAL DRAINAGE AREA OF 5.84 ACRES. THE SITE SIZE IS 4.90 ACRES, THEREFORE, FROM APPENDIX B, THE MAXIMUM ALLOWED TURBIDITY VALUE IS 150 NTU's.

AN SS101 STORMWATER SAMPLER BY GLOBAL WATER (OR EQUIVALENT) WILL BE USED TO COLLECT AND HANDLE THE STORM WATER DISCHARGE SAMPLES PRIOR TO ANALYSIS. PART OF THIS SAMPLING PLAN INCLUDES THE SS101 STORMWATER SAMPLER USER'S MANUAL BY GLOBAL WATER (OR EQUIVALENT).

THE STORM WATER SAMPLES WILL BE ANALYZED USING THE LAMOTTE 2020 TURBIDIMETER (OR EQUIVALENT). PART OF THIS SAMPLING PLAN INCLUDES THE INSTRUCTION MANUAL FOR THE LAMOTTE 2020 TURBIDIMETER BY LAMOTTE COMPANY (OR EQUIVALENT).

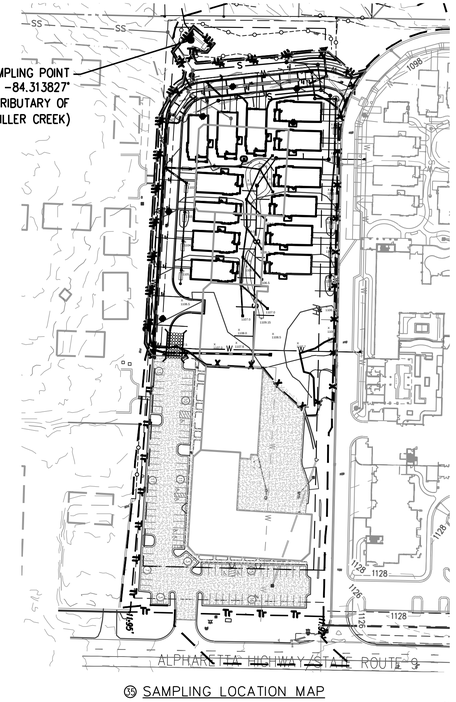

(35) SAMPLING LOCATION MAP

SCALE: 1" = 100'
0 100 200 300

GEORGIA UNIFORM CODING SYSTEM FOR SOIL EROSION AND SEDIMENT CONTROL PRACTICES

GEORGIA SOIL AND WATER CONSERVATION COMMISSION

STRUCTURAL PRACTICES

CODE	PRACTICE	DETAIL	MAP SYMBOL	DESCRIPTION
Cd	CHECKDAM			A small temporary barrier or dam constructed across a swale, drainage ditch or area of concentrated flow.
Ch	CHANNEL STABILIZATION			Improving, constructing or stabilizing an open channel, existing stream, or ditch.
Co	CONSTRUCTION EXIT			A crushed stone pad located at the construction site exit to provide a place for removing mud from tires thereby protecting public streets.
Di	DIVERSION			An earth channel or dike located above, below, or across a slope to divert runoff. This may be a temporary or permanent structure.
Dn1	TEMPORARY DOWNDRAIN STRUCTURE			A flexible conduit of heavy-duty fabric or other material designed to safely conduct surface runoff down a slope. This is temporary and inexpensive.
Fr	FILTER RING			A temporary stone barrier constructed at storm drain inlets and pond outlets.
Lv	LEVEL SPREADER			A structure to convert concentrated flow of water into less erosive sheet flow. This should be constructed only on undisturbed soils.
Rt	RETRO FITTING			A device or structure placed in front of a permanent stormwater detention pond outlet structure to serve as a temporary sediment trap.
Sd1	SEDIMENT BARRIER			A barrier to prevent sediment from leaving the construction site. It may be sandbags, bales of straw or hay, brush, logs and poles, gravel, or a silt fence.
Sd2	INLET SEDIMENT TRAP			An impounding area created by excavating around a storm drain drop inlet. The excavated area will be filled and stabilized on completion of construction activities.
Sd4	TEMPORARY SEDIMENT TRAP			A small temporary pond that drains a disturbed area so that sediment can settle out. The principle feature distinguishing a temporary sediment trap from a temporary sediment basin is the lack of a

ARBORIST CHECKLIST NOTES

1. IF THERE ARE INCONSISTENCIES BETWEEN ANY ITEMS ON THESE PLANS THE MORE STRICT INTERPRETATION OF THOSE REQUIREMENTS SHALL BE FOLLOWED. PLEASE CONTACT THE CITY ARBORIST FOR ANY INTERPRETATION.
2. PRIOR TO INITIAL SITE OPENING AND INSPECTION CITY ARBORIST WILL BE PROVIDED WITH RECEIPTS AND OR EXECUTED CONTRACTS SHOWING THE REQUIRED TREE CARE PLAN HAS BEEN PRE-PAID TO A REPUTABLE TREE CARE COMPANY.
3. TREE SAVE FENCE AND SIGNAGE FOR ENTIRE SITE MUST BE INSTALLED, INSPECTED AND APPROVED PRIOR TO INSTALLATION OF EROSION CONTROL MEASURES. NO LAND DISTURBANCE OR DEMOLITION IS ALLOWED BEFORE THIS INSPECTION AND APPROVAL HAS OCCURRED.
4. THE CRZ OF SPECIMEN TREES PLUS ALL BUFFERS SHALL BE PROTECTED WITH WIRE-BACK TREE SAVE FENCING WITH METAL SUPPORT POSTS OR CHAIN LINK AND TREE SAVE SIGNAGE.
5. INSTALLATION OF THE TREE SAVE FENCE WILL INVOLVE NO TRENCHING.
6. ALL EXISTING TREES IDENTIFIED FOR PRESERVATION OR FOUND WITHIN TREE SAVE AREAS MUST BE FULLY PROTECTED DURING ALL PHASES OF THIS PROJECT.
7. ADDITIONAL TREES ALONG THE LIMITS OF DISTURBANCE WITH ENCROACHMENT INTO THE SRP AND DEEMED STRUCTURALLY UNSAFE BY THE CITY ARBORIST OR THE PROJECT ARBORIST MAY BE REQUIRED TO BE REMOVED PRIOR TO CO.
8. ALL ROOTS ENCOUNTERED 1/2" OR GREATER DURING GRADING OR EXCAVATING OPERATIONS SHALL BE CLEAN CUT UNDER THE DIRECTION OF AN ISA CERTIFIED ARBORIST.
9. ANY LIMBS OVERHANGING THE LOD THAT MAY BE RIPPED, TORN, OR DAMAGED DURING CONSTRUCTION SHALL BE PROPERLY PRUNED UNDER THE DIRECTION OF AN ISA CERTIFIED ARBORIST.
10. IT IS THE OWNER'S RESPONSIBILITY TO MAINTAIN THE VEGETATION AND REMOVE TRASH AND DEBRIS AROUND THE PERIMETER OF THE PROJECT, EVEN IF WITHIN THE PUBLIC ROW, IN ACCORDANCE WITH THE CITY OF ALPHARETTA PROPERTY MAINTENANCE CODES.
11. ALL APPROVED REVISIONS TO THE LOCATION OF THE TREE SAVE FENCE NEED TO BE COORDINATED WITH THE LAND DISTURBANCE INSPECTOR PRIOR TO RELOCATION.

CITY OF ALPHARETTA NOTES

1. THIS SITE DOES NOT CONTAIN ANY STATE WATERS OR WETLANDS.
2. SEDIMENT STORAGE VOLUME MUST BE IN PLACE PRIOR TO AND DURING ALL LAND DISTURBING ACTIVITIES UNTIL FINAL STABILIZATION OF THE SITE HAS BEEN ACHIEVED.
3. EROSION CONTROL MATTING SHALL BE INSTALLED ON ALL SLOPES 3:1 AND STEEPER.
4. APPROVED PLANS AND NPDES DAILY LOG MUST BE ON SITE AT ALL TIMES.
5. CONTRACTOR MUST ATTEND CITY OF ALPHARETTA PRE-CONSTRUCTION CLASS PRIOR TO SITE INITIATION.

EXISTING UTILITIES ARE SHOWN FOR THE CONTRACTOR'S CONVENIENCE ONLY. THE ENGINEER ASSUMES NO RESPONSIBILITY FOR THE LOCATIONS SHOWN OR FOR THE UTILITIES NOT SHOWN. IT SHALL BE THE CONTRACTORS RESPONSIBILITY TO VERIFY THE LOCATIONS OF ALL UTILITIES WITHIN THE LIMITS OF THE WORK. ALL DAMAGE MADE TO EXISTING UTILITIES BY THE CONTRACTOR SHALL BE THE SOLE RESPONSIBILITY OF THE CONTRACTOR. THE CONTRACTOR IS ADVISED TO NOTIFY THE UTILITIES PROTECTION CENTER AT (800) 282-7411 PRIOR TO ANY EXCAVATION.

CONTRACTOR TO PROVIDE THE FOLLOWING BMPS FOR THE SITE IN COMPLIANCE WITH NPDES PERMIT PART III.C.2:

- CONDUCT TURBIDITY SAMPLING AFTER EVERY RAIN EVENT OF 0.5 INCH OR GREATER WITHIN ANY 24 HOUR PERIOD, RECOGNIZING THE EXCEPTIONS SPECIFIED IN PART IV.D.6.D. OF THE NPDES PERMITS.
- A USE FLOCCULANTS OR COAGULANTS AND/OR MULCH TO STABILIZE AREAS LEFT DISTURBED FOR MORE THAN SEVEN (7) CALENDAR DAYS IN ACCORDANCE WITH SECTION III. D.1. OF THE NPDES PERMIT.
- USE MULCH FILTER BERMS, IN ADDITION TO A SILT FENCE, ON THE SITE PERIMETER WHEREVER CONSTRUCTION STORM WATER (INCLUDING SHEET FLOW) MAY BE DISCHARGED. MULCH FILTER BERMS CANNOT BE PLACED IN WATERWAYS OR AREAS OF CONCENTRATED FLOW.
- CERTIFIED PERSONNEL FOR PRIMARY PERMITTEES SHALL CONDUCT INSPECTIONS AT LEAST TWICE EVERY SEVEN (7) CALENDAR DAYS AND WITHIN 24 HOURS OF THE END OF THE STORM THAT IS 0.5 INCHES RAINFALL OR GREATER IN ACCORDANCE WITH PART IV.D.4.A.(3).(A) – (C); SECONDARY PERMITTEES, PART IV.D.4.B.(3). (A) – (C); AND TERTIARY PERMITTEES PART IV.D.4.C.(3).(A) – (C) .

DESIGN LANDSCAPE ARCHITECT OR PROJECT ARBORIST WILL INSPECT, VERIFY, AND APPROVE THE LANDSCAPING IS PLANTED PER THE APPROVED PLANS AND CITY STANDARDS PRIOR TO CONTACTING THE CITY ARBORIST FOR A CO INSPECTION.

PROPOSED CONSTRUCTION ACTIVITY DISCHARGES WATER WITHIN 1 LINEAR MILE OF AND WITHIN THE SAME WATERSHED OF FOE KILLER CREEK LISTED AS A BIOTA IMPAIRED STREAM SEGMENTS LISTED FOR CRITERIA VIOLATED, "BIO F" (IMPAIRED FISH COMMUNITY) AND/OR "BIO M" (IMPAIRED MACRO INVERTEBRATE COMMUNITY), WITHIN CATEGORY 4A, 4B OR 5, AND THE POTENTIAL CAUSE IS EITHER "NP" (NONPOINT SOURCE) OR "UR" (URBAN RUNOFF).
A TMDL IMPLEMENTATION PLAN FOR SEDIMENT HAS NOT BEEN FINALIZED FOR FOE KILLER CREEK.

SEDIMENT STORAGE WRITTEN RATIONALE:
FOR SHEET FLOW LOCATIONS 1, 2, 3, AND 4 A TEMPORARY SEDIMENT BASIN IS NOT PROVIDED BECAUSE THE REQUIRED SEDIMENT STORAGE VOLUME FOR THE TOTAL DRAINAGE AREA IS PROVIDED (SUBSTANTIALLY EXCEEDED) BY THE TYPE S SILT FENCE. THE LOCATION OF THE SITE AMENITIES HAVE BEEN SELECTED TO MINIMIZE THE ADDITIONAL DRAINAGE AREA FROM OFFSITE (UPSTREAM) FLOWS. THE TERRAIN DOES NOT PROVIDE A LOCATION TO OBTAIN MAXIMUM STORAGE BENEFIT AND EASE OF CLEAN-OUT OF ANY TRAPPED SEDIMENT. THERE ARE NO STORM PIPE DRAINAGE SYSTEMS TO DISCHARGE DIRECTLY INTO A SEDIMENT BASIN AS ALL THE RUNOFF IS TREATED THROUGH SHEET FLOW.

24-HOUR CONTACT:
BRYAN HENDERSON
404 271-8403

overhead 811 underground
Know what's below. Call before you dig.

CALL 811 BEFORE ANY EXCAVATION WORK BEGINS OR ANY WORK BEGINS WITHIN TEN FT.(10') OF OVERHEAD POWER LINES OF 750 VOLTS OR MORE. SMART DIGGING MEANS CALLING 811 BEFORE EACH JOB. WHETHER YOU ARE A HOMEOWNER OR A PROFESSIONAL EXCAVATOR, ONE CALL TO 811 GETS YOUR UNDERGROUND UTILITY LINES MARKED FOR FREE.

EROSION CONTROL NOTES

1. SEDIMENT STORAGE MAINTENANCE INDICATORS MUST BE INSTALLED IN SEDIMENT STORAGE STRUCTURES, INDICATING THE 1/3 FULL VOLUME.
2. MAINTENANCE OF ALL SOIL EROSION AND SEDIMENTATION CONTROL MEASURES AND PRACTICES, WHETHER TEMPORARY OR PERMANENT, SHALL BE AT ALL TIMES THE RESPONSIBILITY OF THE PROPERTY OWNER.
3. A 50-FOOT UNDISTURBED BUFFER AND A 75-FOOT IMPERVIOUS SETBACK SHALL TO BE MAINTAINED ADJACENT TO ALL STREAMS.
4. ALL FILL SLOPES SHALL HAVE SILT FENCE PLACED AT THE SLOPE'S TOE.
5. CONCENTRATED FLOW AREAS AND ALL SLOPES STEEPER THAN 2.5:1 WITH A HEIGHT OF TEN FEET OR GREATER SHALL BE STABILIZED WITH THE APPROPRIATE EROSION CONTROL SLOPE STABILIZATION.
6. (24) CONCRETE TRUCKS SHALL NOT WASH OUT DRUM ONSITE. UTILIZE THE PROVIDED CONCRETE WASH OUT AREA TO DISCHARGE SURPLUS CONCRETE OR WASH OUT CHUTE ONLY.
7. THE SOIL EROSION AND SEDIMENT CONTROL ORDINANCE REQUIRES THAT A 25 FOOT BUFFER ADJACENT TO ALL STATE WATERS BE MAINTAINED (ARTICLE 4 SECTION 4.3 PARAGRAPH 15). AN EXCEPTION IS GRANTED TO HOME OWNERS WHO PERFORM MINOR LAND DISTURBING ACTIVITIES SUCH AS HOME LANDSCAPING, HOME GARDENS, REPAIRS AND MAINTENANCE WORK (ARTICLE 3, SECTION 3.1, PARAGRAPH 3).
8. THE INSTALLATION OF EROSION AND SEDIMENTATION CONTROL MEASURES AND PRACTICES SHALL OCCUR PRIOR TO OR CONCURRENT WITH LAND DISTURBING ACTIVITIES.
9. EROSION AND SEDIMENTATION CONTROL MEASURES SHALL BE MAINTAINED AT ALL TIMES. ADDITIONAL EROSION AND SEDIMENTATION CONTROL MEASURES AND PRACTICES SHALL BE INSTALLED IF DEEMED NECESSARY BY ON SITE INSPECTION.
10. ANY DISTURBED AREA LEFT EXPOSED FOR A PERIOD GREATER THAN 14 DAYS SHALL BE STABILIZED WITH MULCH OR TEMPORARY SEEDING.

(17) SOIL LEGEND

SYMBOL	NAME	TEXTURE	SLOPE
UfC2	URNE	FINE SANDY LOAM	6-12%
Ub	URBAN LAND	–	–

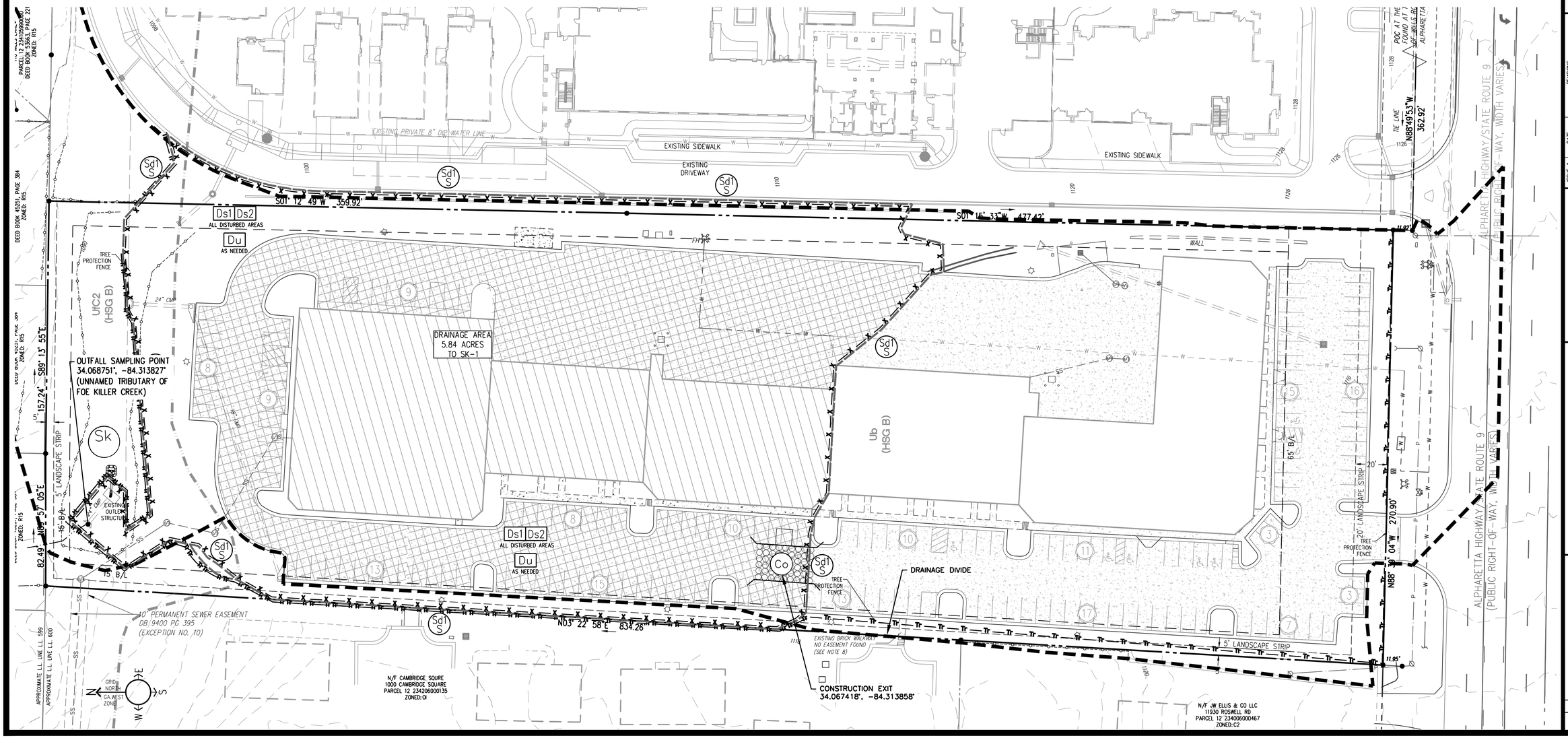

BLUE LANDWORKS
CONSULTING ENGINEERS & SURVEYORS
LICENSE # PEF005518
LICENSE # LSF001044
5019 WEST BROAD STREET
SUITE M230
SUGAR HILL, GEORGIA 30518
TELEPHONE: (678) 804-8586
INFO@BLUELANDWORKS.COM
WWW.BLUELANDWORKS.COM

PREPARED FOR:
VILLAGE PARK SENIOR LIVING, LLC
11930 ROSWELL RD SUITE 1100
ATLANTA, GA 30328
PHONE:
CONTACT: BRYAN HENDERSON
EMAIL: bryan@parkliving.com

GEORGIA REGISTERED No. 27087 PROFESSIONAL ENGINEER JONATHAN H. NIESOL

ISSUE #	DATE	REVISIONS
1	10/12/2021	SUBMIT FOR REVIEW

SCALE: 1" = 30'
0 30 60 90 feet

VILLAGE PARK MILTON
PHASE TWO
11940 ALPHARETTA HIGHWAY

PARCEL(S) 12-2340060066
CITY OF ALPHARETTA
LAND LOT 600, 1ST DISTRICT
FULTON COUNTY, GA
DRAWN: CC
CHECKED: JN

EROSION CONTROL PLAN INITIAL PHASE

PROJECT# 2019.099
E-101

V:\2019-099 - 11940 Alpharetta Hwy\1000 - AutoCAD\30 - Construction\2019.099 VP Milton_ERSOPL.dwg, E-101 10/12/2021 9:36 AM by Carter Holt

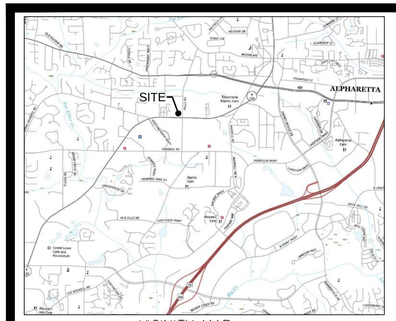

VICINITY MAP
SCALE: NTS
SOURCE: USGS

GENERAL NOTES

1. OWNER/DEVELOPER: **VILLAGE PARK SENIOR LIVING, LLC**
   3424 PEACHTREE RD SUITE 1780
   ATLANTA, GA 30326
   TEL: 678 677-8900
   CONTACT: BRYAN HENDERSON – bryan@galerieliving.com

2. ENGINEER: **BLUE LANDWORKS LLC**
   5019 WEST BROAD STREET
   SUITE M230
   SUGAR HILL, GEORGIA 30518
   TEL: 678-804-8586
   CONTACT: JOHN NICOL, PE
   GA PE #28657
   GA SSWCC LEVEL II CERTIFIED DESIGN PROFESSIONAL #14361

3. THIS PROPERTY IS SHOWN ON FULTON COUNTY TAX MAPS AS BEING PART OF THE 1ST LAND DISTRICT, LAND LOT 60, PARCEL ID(S) 12-234006000566 AND CONTAINING 4.90 ACRES.
4. THIS PROPERTY IS ZONED O-I (OFFICE INSTITUTIONAL).
5. PROPOSED USE: ASSISTED LIVING
   TOTAL AREA = 4.90 ACRES
   NUMBER OF COTTAGE UNITS = 17
   INTERIOR SETBACKS:
   MINIMUM FRONT SETBACK: 65 FEET
   MINIMUM SIDE SETBACK: 15 FEET
   MINIMUM REAR SETBACK: 15 FEET
6. THERE IS NO FLOODPLAIN ON THIS PROPERTY PER FEMA NFIP FIRM PANEL NO. 13121C0054F, DATED 9/18/13.
7. THIS SITE DOES NOT CONTAIN AREAS, STREAMS, AND/OR BODIES OF WATER DEPICTED AS WETLANDS ON THE U.S. DEPARTMENT OF INTERIOR, FISH, AND WILDLIFE SERVICE NATIONAL WETLANDS INVENTORY.
8. SOURCE OF TOPOGRAPHY IS FULTON COUNTY GIS. CONTOUR INTERVAL IS 2 FEET. REFERENCE DATUM IS NAVD 88.
9. WATER DISTRIBUTION AND SANITARY SEWER SERVICE TO BE PROVIDED BY FULTON COUNTY.
10. THIS SITE DOES NOT CONTAIN STATE WATERS REQUIRING AN UNDISTURBED 25' STATE WATERS BUFFER.
11. "SURVEY FOR 11940 ALPHARETTA HIGHWAY FOR VILLAGE PARK SENIOR LIVING, LLC" BY BLUE LANDWORKS, LLC DATED DECEMBER 30, 2019.

LEGEND

ABBREVIATIONS

APPROX	= APPROXIMATE	HP	= HIGH POINT	UGTM	= UG TELEPHONE MARKER
BC	= BACK OF CURB	INV	= INVERT	WM	= WATER METER
BFE	= BOTTOM FLOOR ELEVATION	IE	= INVERT ELEVATION	WV	= WATER VALVE
BM	= BENCHMARK	IPF	= IRON PIN FOUND	YI	= YARD INLET
BW	= BOTTOM OF WALL	IPS	= IRON PIN SET – 1/2" REBAR		
BLDG	= BUILDING	ICV	= IRRIGATION CONTROL VALVE		
B/L	= BUILDING LINE	JB	= JUNCTION BOX		
CB	= CATCH BASIN	LLL	= LAND LOT LINE		
C/L	= CENTERLINE	LP	= LIGHT POLE		
CO	= CLEANOUT	LOWP	= LOW POINT		
CONC	= CONCRETE	MH	= MANHOLE		
CMF	= CONCRETE MONUMENT FOUND	MSL	= MEAN SEA LEVEL		
CMP	= CORRUGATED METAL PIPE	OTP	= OPEN TOP PIPE		
CSP	= CORRUGATED STEEL PIPE	OCS	= OUTLET CONTROL STRUCTURE		
CF	= CUBIC FEET	PVMT	= PAVEMENT		
C&G	= CURB & GUTTER	PED	= PEDESTAL		
CTF	= CRIMP TOP FOUND	PKF	= PK NAIL FOUND		
DIA	= DIAMETER	PCP	= POLYVINYL CHLORIDE PIPE		
DE	= DRAINAGE EASEMENT	POB	= POINT OF BEGINNING		
DI	= DROP INLET	PWR	= POWER		
DIP	= DUCTILE IRON PIPE	PP	= POWER POLE		
DWCB	= DOUBLE WING CATCH BASIN	PTP	= POWER/TELEPHONE POLE		
EP	= EDGE OF PAVEMENT	P/L	= PROPERTY LINE		
ELEV	= ELEVATION	PROP	= PROPOSED		
EX	= EXISTING	RB	= REBAR		
FC	= FACE OF CURB	RCP	= REINFORCED CONCRETE PIPE		
FT	= FEET	R/W	= RIGHT-OF-WAY		
FFE	= FINISHED FLOOR ELEVATION	SSE	= SANITARY SEWER EASEMENT		
FH	= FIRE HYDRANT	SSMH	= SANITARY SEWER MANHOLE		
FES	= FLARED END SECTION	SWCB	= SINGLE WING CATCH BASIN		
FM	= FORCE MAIN	S/W	= SIDEWALK		
GPMH	= GEORGIA POWER MANHOLE	SF	= SQUARE FEET		
GI	= GRATE INLET	TEL	= TELEPHONE		
GR	= GROUND	TB	= TOP OF BANK		
GW	= GUY WIRE	TC	= TOP OF CURB		
HW	= HEADWALL	TPOB	= TRUE POINT OF BEGINNING		
HDPE	= HIGH DENSITY POLYETHYLENE	TW	= TOP OF WALL		
		TRANS	= TRANSFORMER		
		UG	= UNDERGROUND		

LINETYPES

= BRANCH/CREEK
= FENCE
= GAS LINE
= LAND LOT LINE
= PLUGGED PIPE/STUB
= POWER LINE
= SANITARY SEWER LINE
= STORM DRAINAGE LINE
= TELEPHONE LINE
= TRAVERSE LINE/POINT
= WATER LINE

SYMBOLS

= PROPERTY CORNER
= SIGN
= SSMH
= STUB
= HYDRANT
= WATER METER
= WATER VALVE
= LIGHT POST
= UTILITY POLE

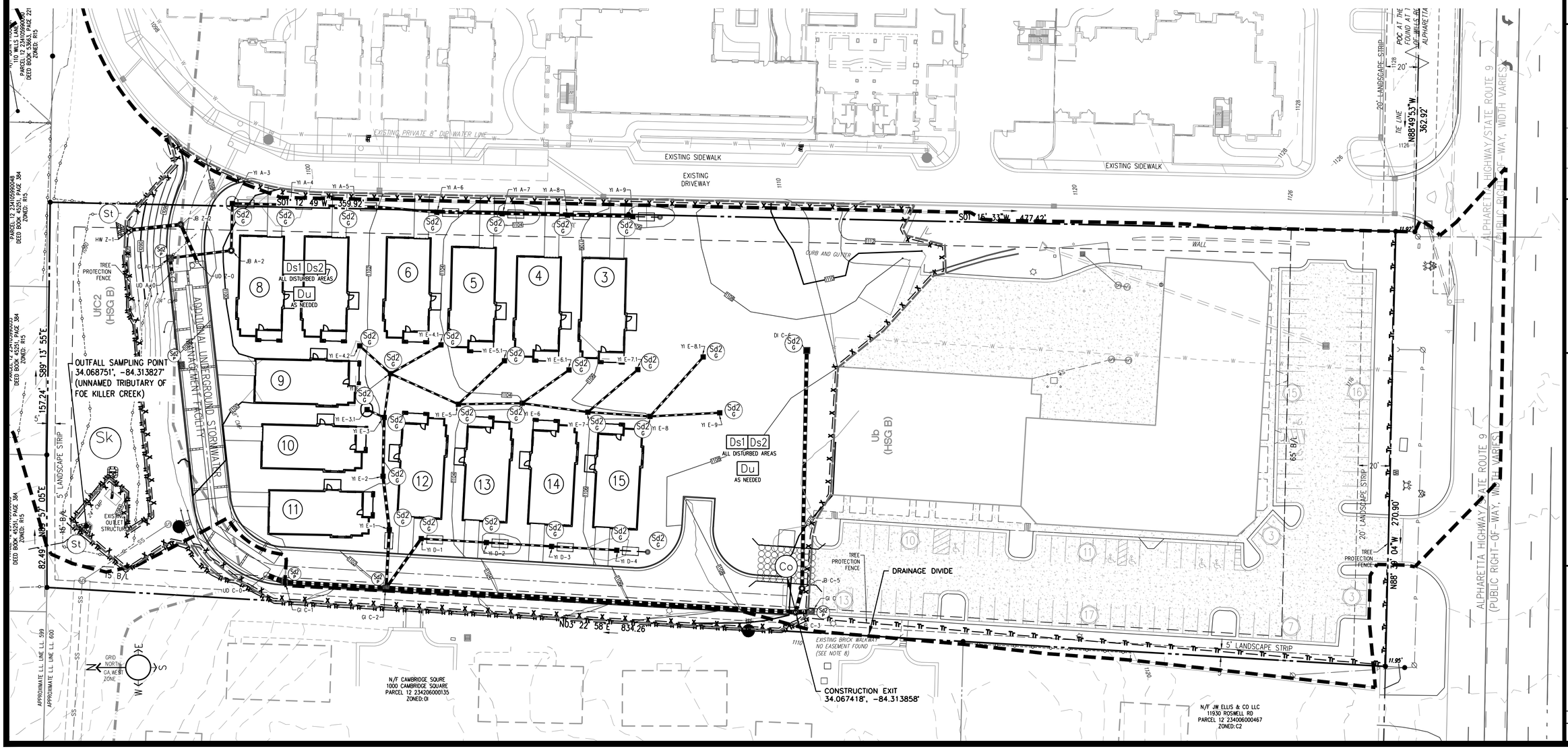

BLUE LANDWORKS
CONSULTING ENGINEERS & SURVEYORS
LICENSE # PEF005518
LICENSE # LSF001044
5019 WEST BROAD STREET
SUITE M230
SUGAR HILL, GEORGIA 30518
TELEPHONE: (678) 804-8586
INFO@BLUELANDWORKS.COM
WWW.BLUELANDWORKS.COM

PREPARED FOR:
VILLAGE PARK SENIOR LIVING, LLC
3424 PEACHTREE RD SUITE 1780
ATLANTA, GA 30326
PHONE: 678 677-8900
CONTACT: BRYAN HENDERSON
EMAIL: bryan@galerieliving.com

GEORGIA REGISTERED No. 27657 PROFESSIONAL ENGINEER JONATHAN H. NICOL

ISSUE #	DATE	REVISIONS
1	10/12/2021	SUBMIT FOR REVIEW

SCALE: 1" = 30'
0 30 60 90 feet
scale

VILLAGE PARK MILTON
PHASE TWO
11940 ALPHARETTA HIGHWAY

PARCEL(S) 12-2340600566
CITY OF ALPHARETTA
LAND LOT 600, 1ST DISTRICT
FULTON COUNTY, GA
DRAWN: CC
CHECKED: JN

EROSION CONTROL PLAN INTERMEDIATE PHASE

PROJECT# 2019.099

E-102

X:\2019-099 - 11940 Alpharetta Hwy\1000 - AutoCAD\30 - Construction\2019.099 VP Milton_EROSION.dwg, E-102 10/12/2021 9:36 AM by Carter Hoff

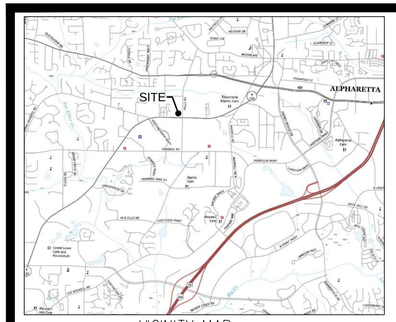

VICINITY MAP
SCALE: NTS
SOURCE: USGS

GENERAL NOTES

1. OWNER/DEVELOPER: **VILLAGE PARK SENIOR LIVING, LLC**
   3424 PEACHTREE RD SUITE 1780
   ATLANTA, GA 30326
   TEL: 678 677-8900
   CONTACT: BRYAN HENDERSON – bryan@galerieliving.com

2. ENGINEER: **BLUE LANDWORKS LLC**
   5019 WEST BROAD STREET
   SUITE M230
   SUGAR HILL, GEORGIA 30518
   TEL: 678-804-8586
   CONTACT: JOHN NICOL, PE
   GA PE #28657
   GA SSWCC LEVEL II CERTIFIED DESIGN PROFESSIONAL #14361

3. THIS PROPERTY IS SHOWN ON FULTON COUNTY TAX MAPS AS BEING PART OF THE 1ST LAND DISTRICT, LAND LOT 60, PARCEL ID(S) 12-234006000566 AND CONTAINING 4.90 ACRES.
4. THIS PROPERTY IS ZONED O-I (OFFICE INSTITUTIONAL).
5. PROPOSED USE: ASSISTED LIVING
   TOTAL AREA = 4.90 ACRES
   NUMBER OF COTTAGE UNITS = 17
   INTERIOR SETBACKS:
   MINIMUM FRONT SETBACK: 65 FEET
   MINIMUM SIDE SETBACK: 15 FEET
   MINIMUM REAR SETBACK: 15 FEET
6. THERE IS NO FLOODPLAIN ON THIS PROPERTY PER FEMA NFIP FIRM PANEL NO. 13121C0054F, DATED 9/18/13.
7. THIS SITE DOES NOT CONTAIN AREAS, STREAMS, AND/OR BODIES OF WATER DEPICTED AS WETLANDS ON THE U.S. DEPARTMENT OF INTERIOR, FISH, AND WILDLIFE SERVICE NATIONAL WETLANDS INVENTORY.
8. SOURCE OF TOPOGRAPHY IS FULTON COUNTY GIS. CONTOUR INTERVAL IS 2 FEET. REFERENCE DATUM IS NAVD 88.
9. WATER DISTRIBUTION AND SANITARY SEWER SERVICE TO BE PROVIDED BY FULTON COUNTY.
10. THIS SITE DOES NOT CONTAIN STATE WATERS REQUIRING AN UNDISTURBED 25' STATE WATERS BUFFER.
11. "SURVEY FOR 11940 ALPHARETTA HIGHWAY FOR VILLAGE PARK SENIOR LIVING, LLC" BY BLUE LANDWORKS, LLC DATED DECEMBER 30, 2019.

LEGEND

ABBREVIATIONS

APPROX	=	APPROXIMATE
BC	=	BACK OF CURB
BFE	=	BOTTOM FLOOR ELEVATION
BM	=	BENCHMARK
BW	=	BOTTOM OF WALL
BLDG	=	BUILDING
B/L	=	BUILDING LINE
CB	=	CATCH BASIN
C/L	=	CENTERLINE
CO	=	CLEANOUT
CONC	=	CONCRETE
CMF	=	CONCRETE MONUMENT FOUND
CMP	=	CORRUGATED METAL PIPE
CSP	=	CORRUGATED STEEL PIPE
CF	=	CUBIC FEET
C&G	=	CURB & GUTTER
CTF	=	CRIMP TOP FOUND
DIA	=	DIAMETER
DE	=	DRAINAGE EASEMENT
DI	=	DROP INLET
DIP	=	DUCTILE IRON PIPE
DWCB	=	DOUBLE WING CATCH BASIN
EP	=	EDGE OF PAVEMENT
ELEV	=	ELEVATION
EX	=	EXISTING
FC	=	FACE OF CURB
FT	=	FEET
FFE	=	FINISHED FLOOR ELEVATION
FH	=	FIRE HYDRANT
FES	=	FLARED END SECTION
FM	=	FORCE MAIN
GPMH	=	GEORGIA POWER MANHOLE
GI	=	GRATE INLET
GR	=	GROUND
GW	=	GUY WIRE
HW	=	HEADWALL
HDPE	=	HIGH DENSITY POLYETHYLENE
HP	=	HIGH POINT
INV	=	INVERT
IE	=	INVERT ELEVATION
IPF	=	IRON PIN FOUND
IPS	=	IRON PIN SET – 1/2" REBAR
ICV	=	IRRIGATION CONTROL VALVE
JB	=	JUNCTION BOX
LLL	=	LAND LOT LINE
LP	=	LIGHT POLE
LOWP	=	LOW POINT
MH	=	MANHOLE
MSL	=	MEAN SEA LEVEL
OTP	=	OPEN TOP PIPE
OCS	=	OUTLET CONTROL STRUCTURE
PVMT	=	PAVEMENT
PED	=	PEDESTAL
PKF	=	PK NAIL FOUND
PCP	=	POLYVINYL CHLORIDE PIPE
POB	=	POINT OF BEGINNING
PWR	=	POWER
PP	=	POWER POLE
PTP	=	POWER/TELEPHONE POLE
P/L	=	PROPERTY LINE
PROP	=	PROPOSED
RB	=	REBAR
RCP	=	REINFORCED CONCRETE PIPE
R/W	=	RIGHT-OF-WAY
SSE	=	SANITARY SEWER EASEMENT
SSMH	=	SANITARY SEWER MANHOLE
SWCB	=	SINGLE WING CATCH BASIN
S/W	=	SIDEWALK
SF	=	SQUARE FEET
TEL	=	TELEPHONE
TB	=	TOP OF BANK
TC	=	TOP OF CURB
TPOB	=	TRUE POINT OF BEGINNING
TW	=	TOP OF WALL
TRANS	=	TRANSFORMER
UG	=	UNDERGROUND
UGTM	=	UG TELEPHONE MARKER
WM	=	WATER METER
WV	=	WATER VALVE
YI	=	YARD INLET

LINETYPES

	=	BRANCH/CREEK
–o–o–	=	FENCE
– – G – – –	=	GAS LINE
—— - - - -	=	LAND LOT LINE
———	=	PLUGGED PIPE/STUB
– · – P – · –	=	POWER LINE
—— S ——	=	SANITARY SEWER LINE
═══	=	STORM DRAINAGE LINE
–T– –T–	=	TELEPHONE LINE
	=	TRAVERSE LINE/POINT
—— W ——	=	WATER LINE

SYMBOLS

●	=	PROPERTY CORNER
	=	SIGN
	=	SSMH
	=	STUB
	=	HYDRANT
	=	WATER METER
	=	WATER VALVE
	=	LIGHT POST
	=	UTILITY POLE

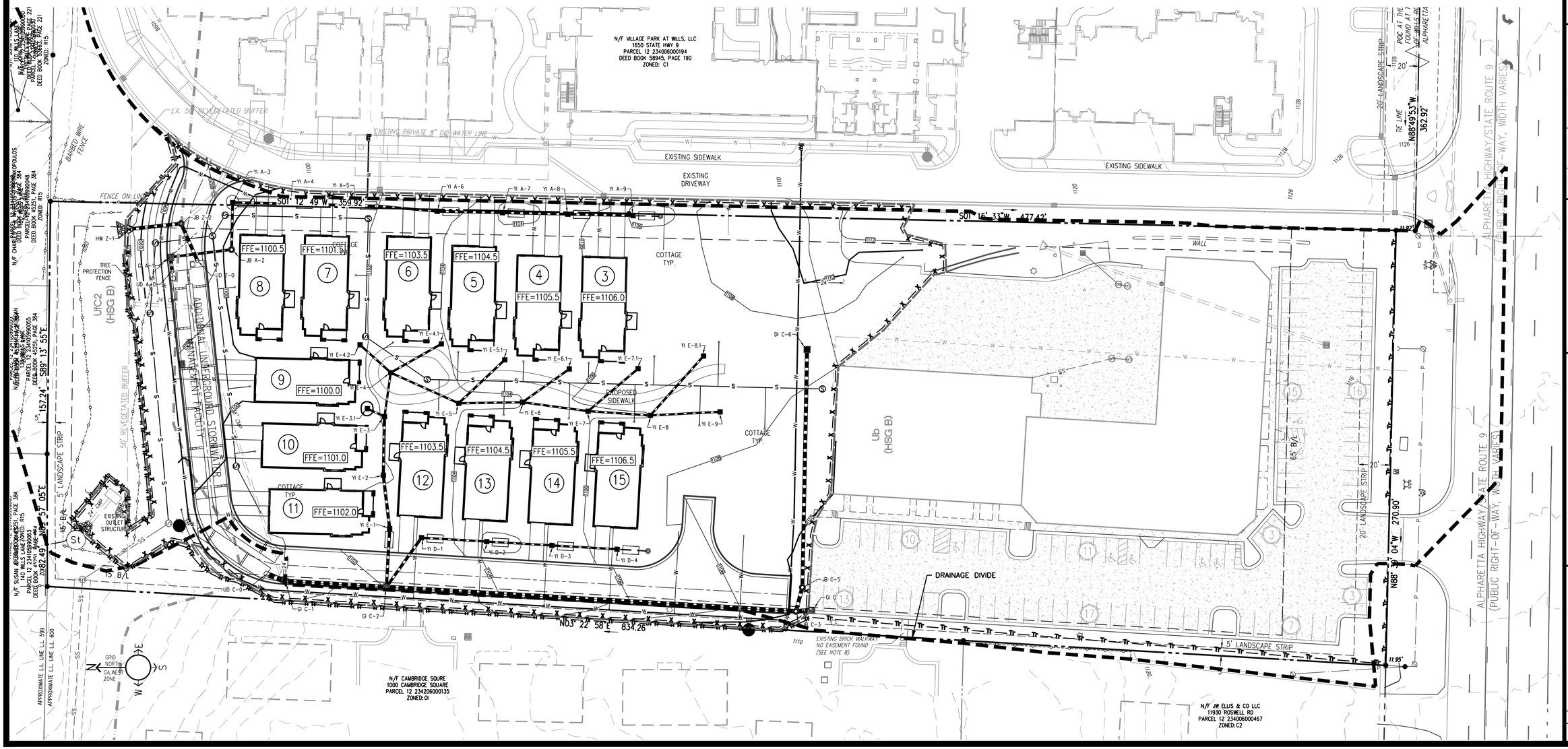

BLUE LANDWORKS
CONSULTING ENGINEERS & SURVEYORS
LICENSE # PEF005518
LICENSE # LSF001044
5019 WEST BROAD STREET
SUITE M230
SUGAR HILL, GEORGIA 30518
TELEPHONE: (678) 804-8586
INFO@BLUELANDWORKS.COM
WWW.BLUELANDWORKS.COM

PREPARED FOR:
VILLAGE PARK SENIOR LIVING, LLC
3424 PEACHTREE RD SUITE 1780
ATLANTA, GA 30326
PHONE: 678 677-8900
CONTACT: BRYAN HENDERSON
EMAIL: bryan@galerieliving.com

GEORGIA REGISTERED No. 27067 PROFESSIONAL ENGINEER JONATHAN H. NICOL

ISSUE #	DATE	REVISIONS
1	10/12/2021	SUBMIT FOR REVIEW

SCALE: 1" = 30'
0 30 60 90 feet
scale

VILLAGE PARK MILTON
PHASE TWO
11940 ALPHARETTA HIGHWAY

PARCEL(S) 12-234006000566
CITY OF ALPHARETTA
FULTON COUNTY, GA
LAND LOT 600, 1ST DISTRICT
DRAWN: CC
CHECKED: JN

EROSION CONTROL PLAN FINAL PHASE

PROJECT# 2019.099

E-103

X:\2019-099 - 11940 Alpharetta Hwy\1000 - AutoCAD\30 - Construction\2019.099 BP Milton_ESPSSW.dwg, E-103 10/12/2021 9:37 AM by Carter Hall

Methods and Materials

A. TEMPORARY METHODS

Mulches
See standard Ds1-Disturbed Area Stabilization (With Mulching Only). Synthetic resins may be used instead of asphalt to bind mulch material. Refer to standard Tac-Tackifiers. Resins such as Curasol or Terratack should be used according to manufacturer's recommendations.

Vegetative Cover
See specification Ds2-Disturbed Area Stabilization (With Temporary Seeding).

Spray-on Adhesives
These are used on mineral soils (not effective on much soils). Keep traffic off these areas. Refer to specification Tac-Tackifiers.

Tillage
This practice is designed to roughen and bring clods to the surface. It is an emergency measure which should be used before wind erosion starts. Begin plowing on windward side of site. Chisel type plows spaced about 12 inches apart, spring-toothed harrows, and similar plows are examples of equipment which may produce the desired effect.

Irrigation
This is generally done as an emergency treatment. Site is sprinkled with water until the surface is wet. Repeat as needed.

Barriers.
Solid board fences, snowfences, burlap fences, crate walls, bales of hay and similar material can be used to control air currents and soil blowing. Barriers placed at right angles to prevailing currents at intervals of about 15 time their height are effective in controlling wind erosion.

Calcium Chloride
Apply at rate that will keep surface moist. May need retreatment.

B. PERMANENT METHODS

Permanent Vegetation
See standard Ds3-Disturbed Area Stabilization (With Permanent Vegetation).
Existing trees and large shrubs may afford valuable protection if left in place. See specification Tp-Topsoiling.

Stone
Cover surface with crushed stone or coarse gravel. See standard Cr-Construction Road Stabilization

Du DUST CONTROL ON DISTURBED AREAS

CONSTRUCTION SPECIFICATIONS

Grading and Shaping
Excessive water runoff shall be reduced by properly designed and installed erosion control practices such as closed drains, ditches, dikes, diversions, sediment barriers and others.

No shaping or grading is required if slopes can be stabilized by handseeded vegetation or if hydraulic seeding equipment is to be used.

Seedbed Preparation
When a hydraulic seeder is used, seedbed preparation is not required. When using conventional or handseeding, seedbed preparation is not required if the soil material is loose and not sealed by rainfall.

When soil has been sealed by rainfall or consists of smooth cut slopes, the soil shall be pitted, trenched or otherwise scarified to provide a place for seed to lodge and germinate.

Lime and Fertilizer
Agricultural lime is required unless soil tests indicate otherwise. Apply agricultural lime at a rate of one ton per acre. Graded areas require lime application. Soils can be tested to determine if fertilizer is needed. On reasonably fertile soils or soil material, fertilizer is not required. For soils with very low fertility, 500 to 700 pounds of 10-10-10 fertilizer or the equivalent per acre (1216 lbs./1,000 sq. ft.) shall be applied. Fertilizer should be applied before land preparation and incorporated with a disk, ripper or chisel.

Seeding
Select a grass or grass legume mixture suitable to the area and season of the year. Seed shall be applied uniformly by hand, cyclone seeder, drill, cultipacker seeder, or hydraulic seeder (slurry including seed and fertilizer). Drill or cultipacker seeders should normally place seed one-quarter to one-half inch deep. Appropriate depth of planting is ten times the seed diameter. Soil should be raked lightly to cover seed with soil if seeded by hand.

MULCHING

TEMPORARY VEGETATION CAN, IN MOST CASES, BE ESTABLISHED WITHOUT THE USE OF MULCH. MULCH WITHOUT SEEDING SHOULD BE CONSIDERED FOR SHORT-TERM PROTECTION. REFER TO DS1 DISTURBED AREA STABILIZATION (WITH MULCHING ONLY).

Irrigation
During times of drought, water shall be applied at a rate not causing runoff and erosion. The soil shall be thoroughly wetted to a depth that will insure germination of the seed. Subsequent applications should be made when needed.

SPECIES	BROADCAST RATES: Rate Per Acre[4]	BROADCAST RATES: PLS Per 1000 SF	RESOURCE AREA[1]	PLANTING DATES BY RESOURCE AREAS (Solid lines indicate optimum dates, dotted lines indicate permissible but marginal dates.) J F M A M J J A S O N D	REMARKS
BARLEY (Hordeum vulgare)			P		14,000 seed per pound Winterhardy, Use on productive soils.
alone	3 bu. (144 lbs.)	3.3 lb			
in mixture	1/2 bu. (24 lbs.)	0.6 lb.			
LESPEDEZA, ANNUAL (Lespedeza striata)			P		200,000 seed per pound. May volunteer for several years. Use inoculant EL.
alone	40 lbs.	0.9 lb.			
in mixtures	10 lbs.	0.2 lb.			
LOVEGRASS, WEEPING (Eragrostis curvula)			P		1,500,000 seed per pound. May lost for several years. Mix with Sericea lespedeza.
alone	4 lbs.	0.1 lb.			
in mixtures	2 lbs.	0.05 lb.			
MILLETT, BROWNTOP (Panicum fasciculatum)			P		137,000 seed per pound. Quick dense cover. Will provide too much competition in mixtures if seeded at high rates.
alone	40 lbs.	0.9 lb.			
in mixtures	10 lbs.	0.2 lb.			
MILLET, PEARL (Pennesetum glaucum)			P		88,000 seed per pound. Quick dense cover. May reach 5 feet in height. Not recommended for mixtures.
alone	50 lbs.	1.1 lb.			
OATS (Avena sativa)			P		13,000 seed per pound. Use on productive soils. Not as winterhardy as rye or barley.
alone	4 bu. (128 lbs.)	2.9 lb.			
in mixtures	1 bu. (32 lbs.)	0.7 lb.			
RYE (Secale cereale)			P		18,000 seed per pound. Quick cover. Drought tolerant and winterhardy
alone	3 bu. (168 lbs.)	3.9 lb.			
in mixtures	1/2 bu. (28 lbs.)	0.6 lb.			
RYEGRASS, ANNUAL (Lolium temulentum)			P		227,000 seed per pound. Dense cover. Very competitive and real to be used in mixtures.
alone	40 lbs.	0.9 lb.			
SUDANGRASS (Sorghum sudanese)			P		55,000 seed per pound. Good recommended for mixtures.
alone	60 lbs.	1.4 lb.			
WHEAT (Triticum aestivum)			P		15,000 seed per pound. Winterhardy
alone	3 bu. (180 lbs.)	4.1 lb.			
in mixtures	1/2 bu. (30 lbs.)	0.7 lb.			

1/ Temporary cover crops are very competitive and will crown out perennials if seeded to heavily.
2/ Reduce seeding rates by 50% when drilled.
3/ PLS is an abbreviation for Pure Live Seed
4/ P represents the Southern Piedmont MLRA

Ds2 DISTURBED AREA STABILIZATION (WITH TEMPORARY VEGETATION)

CONSTRUCTION SPECIFICATIONS

Mulching without Seeding
This standard applies to graded or cleared areas where seeding may not have a suitable growing season to produce an erosion retardant cover, but can be stabilized with a mulch cover.

Site Preparation
1. Grade to permit the use of equipment for applying and anchoring mulch.
2. Install needed erosion control measures as required such as dikes, diversions, berms, terraces and sediment barriers.
3. Loosen compact soil to a minimum depth of 3 inches.

Mulching Materials
Select one of the following materials and apply at the depth indicated:
1. Dry straw or hay shall be applied at a depth of 2 to 4 inches providing complete soil coverage. One advantage of this material is easy application.
2. Wood waste (chips, sawdust or bark) shall be applied at a depth of 2 to 3 inches. Organic material from the clearing stage of development should remain on site, be chipped, and applied as mulch. This method of mulching can greatly reduce erosion control costs.
3. Polyethylene film shall be secured over banks or stockpiled soil material for temporary protection. This material can be salvaged and re-used.

Applying Mulch
When mulch is used without seeding, mulch shall be applied to provide full coverage of exposed area.
1. Dry straw or hay mulch and wood chips shall be applied uniformly by hand or by mechanical equipment.
2. If the area will eventually be covered with perennial vegetation, 20-30 pounds of nitrogen per acre in addition to the normal amount shall be applied to offset the uptake of nitrogen caused by the decomposition of the organic mulches.
3. Apply polyethylene film on exposed areas.

Anchoring Mulch
1. Straw or hay mulch can be pressed into the soil with a disk harrow with the disk set straight or with a special "packer disk". Disks may be smooth or serrated and should be 20 inches or more in diameter and 8 to 12 inches apart. The edges of the disk should be dull enough not to cut the mulch but to press it into the soil leaving much of it in an erect position. Straw or hay mulch shall be anchored immediately after application.

   Straw or hay mulch spread with special blower-type equipment may be anchored. Tackifiers, binders and hydraulic mulch with tackifier specifically designed for tacking straw can be substituted for emulsified asphalt. Please refer to specification TAC-TACKIFIERS. Plastic mesh or netting with mesh no larger than one inch by one inch shall be installed according to manufacturer's specifications.
2. Netting of the appropriate size shall be used to anchor wood waste. Openings of the netting shall not be larger than the average size of the wood waste chips.
3. Polyethylene film shall be anchor trenched at the top as well as incrementally as necessary.

Ds1 DISTURBED AREA STABILIZATION (WITH MULCHING ONLY)

SOD LAYOUT AND PREPARATION

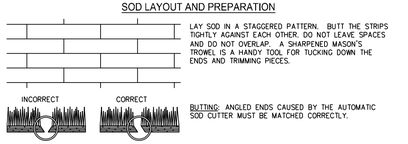

LAY SOD IN A STAGGERED PATTERN. BUTT THE STRIPS TIGHTLY AGAINST EACH OTHER. DO NOT LEAVE SPACES AND DO NOT OVERLAP. A SHARPENED MASON'S TROWEL IS A HANDY TOOL FOR TUCKING DOWN THE ENDS AND TRIMMING PIECES.

BUTTING: ANGLED ENDS CAUSED BY THE AUTOMATIC SOD CUTTER MUST BE MATCHED CORRECTLY.

DIRECTIONS FOR INITIAL MAINTENANCE

Step 1. ROLL SOD IMMEDIATELY TO ACHIEVE FIRM CONTACT WITH THE SOIL

Step 2. WATER TO A DEPTH OF 4" AS NEEDED. WATER WELL AS SOON AS THE SOD IS LAID.

Step 3. MOW WHEN THE SOD IS ESTABLISHED -- IN 2-3 WEEKS. SET THE MOWER HIGH (2"-3").

APPEARANCE OF GOOD SOD

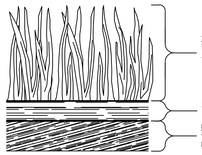

FIGURE 6-6.2 - SOD MAINTENANCE AND INSTALLATION

CONSTRUCTION SPECIFICATIONS INSTALLATION

Soil Preparation

Bring soil surface to final grade. Clear surface of trash, woody debris, stones and clods larger than 1". Apply sod to soil surfaces only and not frozen surfaces, or gravel type soils.

Topsoil properly applied will help guarantee a stand. Don't use topsoil recently treated with herbicides or soil sterilants.

Mix fertilizer into soil surface. Fertilize based on soil tests or the Table 6-6.1 below.

Table 6-6.1 Fertilizer Requirements for Soil Surface Application

Fertilizer Type	Fertilizer Rate (lbs./acre)	Fertilizer Rate (lbs./sq.ft.)	Season
10-10-10	1000	.025	Fall

Agricultural lime should be applied based on soil tests or at a rate of 1 to 2 tones per acre.

Installation

Lay sod with tight joints and in straight lines. Don't overlap joints. Stagger joints and do not stretch sod. (See Figure 6-6.2)
On slopes steeper than 3:1, sod should be anchored with pins or other approved methods.
Installed sod should be rolled or tamped to provide good contact between sod and soil.
Irrigate sod and soil to a depth of 4" immediately after installation.
Sod should not be cut or spread in extremely wet or dry weather. Irrigation should be used to supplement rainfall for a minimum of 2-3 weeks.

Materials

Sod selected should be certified. Sod grown in the general area of the project is desirable.
1. Sod should be machine cut and contain 3/4" (+ or -1/4") of soil, not including shoots or thatch.
2. Sod should be cut to the desired size within + or -5%. Torn or uneven pads should be rejected.
3. Sod should be cut and installed within 36 hours of digging.
4. Avoid planting when subject to frost heave or hot weather, if irrigation is not available.
5. The sod type should be shown on the plans or installed according to Table 6-6.2. See Figure 6-4.1 for your Resource Area.

Table 6-6.2 Sod Planting Requirement

Grass	Varieties	Growing Season
Bermudagrass	Common Tifway Tifgreen Tifdwarf	Warm Weather
Zoysia	Emerald Myer	Warm Weather
Tall Fescue	Kentucky	Cool Weather

MAINTENANCE

Re-sod areas where an adequate stand of sod is not obtained. New sod should be mowed sparingly. Grass height should not be cut less than 2"-3" or as specified (See figure 6-6.2).
Apply one ton of agricultural lime as indicated by soil test or every 4-6 years. Fertilize grasses in accordance with the soil tests or Table 6-6.3.

Table 6-6.3 Fertilizer Requirements for Sod

Types Of Species	Planting Year	Fertilizer (N-P-K)	Rate (lbs./acre)	Nitrogen Top Dressing Rate (lbs./acre)
Cool Season Grasses	First Second Maintenance	6-12-12 6-12-12 10-10-10	1500 1000 400	50-100 -- 30
Warm Season Grasses	First Second Maintenance	6-12-12 6-12-12 10-10-10	1500 800 400	50-100 50-100 30

Ds4 DISTURBED AREA STABILIZATION (WITH SODDING)

CONDITIONS
Permanent perennial vegetation is used to provide a protective cover for exposed areas including cuts, fills, dams, and other denuded areas.

PLANNING CONSIDERATIONS
1. Use conventional planting methods where possible.
2. When mixed plantings are done during marginal planting periods, companion crops shall be used.
3. No-till planting is effective when planting is done following a summer or winter annual cover crop. Sericea lespedeza planted no-till into stands of rye is an excellent procedure.
4. Block sod provides immediate cover. It is especially effective in controlling erosion adjacent to concrete flumes and other structures. Refer to Specification Ds4-Disturbed Area Stabilization (With Sodding).
5. Irrigation should be used when the soil is dry or when summer plantings are done.
6. Low maintenance plants, as well as natives, should be used to ensure long-lasting erosion control.
7. Mowing should not be performed during the quail nesting season (May to September).
8. Wildlife plantings should be included in critical area plantings.

Wildlife plantings
Commercially available plants beneficial to wildlife species include the following:

Most Bearing Trees
Beech, Black Cherry, Blackgum, Chesnut, Chinkapin, Hackberry, Hickory, Honey Locust, Native Oak, Persimmon, Sawtooth Oak and Sweetgum.
All trees that produce nuts or fruits are favored by many game species. Hickory provides nuts used mainly by squirrels and bear.

Shrubs and Small Trees
Bayberry, Bicolor Lespedeza, Crabapple, Dogwood, Huckleberry or Native Huckleberry, Mountain Laurel, Native Holly, Red Cedar, Red Mulberry, Sumac, Wax Myrtle, Wild Plum and Blackberry.
Plant in patches without tall trees to develop stable shrub communities. All produce fruits used by many kinds of wildlife, except for lespedeza which produces seeds used by quail and songbirds.

Grasses, Legumes, Vines and Temporary Cover
Bahiagrass, Bermudagrass, Grass-Legume mixtures, Partridge Pea, Annual Lespedeza, Orchardgrass (for mountains), Browntop Millet (for temporary cover), and Native grapes.
Provides herbaceous cover in clearings for a game bird brood-rearing habitat.
Appropriate legumes such as vetches, clovers, and lespedezas may be mixed with grass, but they may die out after a few years.

CONSTRUCTION SPECIFICATIONS

Grading and Shaping
Grading and shaping may not be required where hydraulic seeding and fertilizing equipment is to be used. Vertical banks shall be sloped to enable plant establishment.
When conventional seeding and fertilizing are to be done, grade and shape where feasible and practical, so that equipment can be used safely and efficiently during seedbed preparation, seeding, mulching and maintenance of the vegetation.
Concentrations of soil erosion shall be diverted to a safe outlet. Diversions and other treatment practices shall conform with the appropriate standards and specifications.

Lime and Fertilizer Rates
Agricultural lime is required at the rate of one to two tons per acre unless soil tests indicate otherwise. Graded areas require lime application. If lime is applied within six months of planting permanent perennial vegetation, additional lime is not required. Agricultural lime shall be within the specifications of the Georgia Department of Agriculture.
Lime spread by conventional equipment shall be "ground limestone." Ground limestone is calcitic or dolomitic limestone ground so that 90 percent of the material will pass through a 10-mesh sieve, not less than 50 percent will pass through a 50-mesh sieve and not less than 25 percent will pass through a 100-mesh sieve.
Fast-acting lime spread by hydraulic seeding equipment should be "finely ground limestone" spanning from the 180 micron size to the 5 micron size. Finely ground limestone is calcitic or dolomitic limestone ground so that 95 percent of the material will pass through a 100-mesh sieve.
It is desirable to use dolomitic limestone in the Sand Hills, Southern Coastal Plain and Atlantic Coast Flatwoods MLRAs.
Agricultural lime is generally not required where only trees are planted.
Initial fertilization, nitrogen, topdressing, and maintenance fertilizer requirements for each species are listed in Table 6-5.1.

Lime and Fertilizer Application
When hydraulic seeding equipment is used, the initial fertilizer shall be mixed with seed, inoculant (if needed), and wood cellulose or wood pulp fiber mulch and applied in a slurry. The inoculant, if needed, shall be mixed with the seed prior to being placed into the hydraulic seeder. The slurry mixture will be agitated during application to keep the ingredients thoroughly mixed. The mixture will be spread uniformly over the area within an hour after being placed in the hydroseeder.
Finely ground limestone can be applied in the mulch slurry or in combination with the top dressing.
When conventional planting is to be done, lime and fertilizer shall be applied uniformly in one of the following ways:
1. Apply before land preparation so that it will be mixed with the soil during seedbed preparation.
2. Mix with the soil used to fill the holes, distribute in furrows.
3. Broadcast after steep surfaces are scarified, pitted or trenched.
4. A fertilizer pellet shall be placed at root depth in the closing hole beside each pine tree seedling.

Plant Selection
Refer to the tables provided for approved species. Species not listed shall be approved by the State Resource Conservationalist of the Natural Resources Conservation Service before they are used.
Plants shall be selected on the basis of species characteristics, site and soil conditions, planned use and maintenance of the area; time of year of planting, method of planting; and the needs and desires of the land user.
Some perennial species are easily established and can be planted alone. Examples of these are Common Bermuda, Tall Fescue, and Weeping Lovegrass.
Other perennials, such as Bahia Grass and Sericea Lespedeza, are slow to become established and should be planted with another perennial species. The additional species will provide quick cover and ample soil protection until the target perennial species become established. For example, Common seeding combinations are 1) Weeping Lovegrass with Sericea Lespedeza (scarified) and 2) Tall Fescue with Sericea Lespedeza (unscarified).
Plant selection may also include annual companion crops. Annual companion crops should be used only when the perennial species are not planted during their optimum planting period. A common mixture in Brown Top Millet with Common Bermuda in mid-summer. Care should be taken in selecting companion crop species and seeding rates because annual crops will compete with perennial species for water, nutrients, and growing space. A high seeding rate of the companion crop may prevent the establishment of perennial species.
Ryegrass shall not be used in any seeding mixtures containing perennial species due to its ability to out-compete desired species chosen for permanent perennial cover.

Seed Quality
The term "pure live seed" is used to express the quality of seed and is not shown on the label. Pure live seed, PLS, is expressed as a percentage of the seeds that are pure and will germinate. Information on percent germination and purity can be found on seed tags. PLS is determined by multiplying the percent of pure seed with the percent of germination; i.e.,
(PLS = % germination x % purity)
EXAMPLE:
Common Bermuda seed
70% germination, 80% purity
PLS = 70% germination x 80% purity
PLS = 56%
The percent of PLS helps you determine the amount of seed you need. If the seeding rate is 10 pounds PLS and the bulk seed is 56% PLS, the bulk seeding rate is:
10 lbs. PLS/acre = 17.9 lbs/acre
56% PLS
You would need to plant 17.9 lbs/acre to provide 10 lbs/acre of pure live seed.

Seedbed Preparation
Seedbed preparation may not be required where hydraulic seeding and fertilizing equipment is to be used (but is strongly recommended for any seeding process, when possible). When conventional seeding is to be used, seedbed preparation will be done as follows:
Broadcast Plantings
1. Tillage, at a minimum, shall adequately loosen the soil to a depth of 4 to 6 inches; alleviate compaction; incorporate lime and fertilizer; smooth out firm the soil; allow for the proper placement of seed, sprigs, or plants; and allow for the anchoring of straw or hay mulch if a disk is to be used.
2. Tillage may be done with any suitable equipment.
3. Tillage should be done on the contour where feasible.
4. On slopes too steep for the safe operation of tillage equipment, the soil surface shall be pitted or trenched across the slope with appropriate hand tools to provide two places 6 to 8 inches apart in which seed may lodge and germinate. Hydraulic seeding may also be used.

Individual Plants
1. Where individual plants are to be set, the soil shall be prepared by excavating holes, opening furrows, or dibble planting.
2. For nursery stock plants, holes shall be large enough to accommodate roots without crowding.
3. Where pine seedlings are to be planted, subsoil under the row 36 inches deep on the contour four to six months prior to planting. Subsoiling should be done when the soil is dry, preferable in August or September.

Inoculants
All legume seed shall be inoculated with appropriate nitrogen-fixing bacteria. The inoculant shall be a pure culture prepared specifically for the seed species and used within the dates on the container.
A mixing medium recommended by the manufacturer shall be used to bond the inoculant to the seed. For conventional seeding, use twice the amount of inoculant recommended by the manufacturer. For hydraulic seeding, four times the amount of inoculant recommended by the manufacturer shall be used.
All inoculated seed shall be protected from the sun and high temperatures and shall be planted the same day inoculated. No inoculated seed shall remain in the hydroseeder longer than one hour.

Planting
Hydraulic Seeding
Mix the seed (inoculated if needed), fertilizer, and wood cellulose or wood pulp fiber mulch with water and apply in a slurry uniformly over the area to be treated. Apply within one hour after the mixture is made.
Conventional Seeding
Seeding will be done on a freshly prepared firmed seedbed. For broadcast planting, use a cultipacker-seeder, drill, rotary seeder, other mechanical seeder, or hand seeding to distribute the seed uniformly over the area to be treated. Cover the seed lightly with 1/8 to 1/4 inch of soil for small seed and 1/2 to 1 inch for large seed when using a cultipacker or other suitable equipment.
No-till Seeding
No-till seeding is permissible into annual cover crops when planting is done following maturity of the cover crop or if the temporary cover stand is sparse enough to allow adequate growth of the permanent (perennial) species. No-till seeding shall be done with appropriate no-till seeding equipment. The seed must be uniformly distributed and planted at the proper depth.
Individual Plants
Shrubs, vines and sprigs may be planted with appropriate planters or hand tools. Pine trees shall be planted manually in the subsoil furrow. Each plant shall be set in a manner that will avoid crowding the roots.
Nursery stock plants shall be planted at the same depth or slightly deeper than they grew at the nursery. The lips of vines and sprigs must be at or slightly above the ground surface.
Where individual holes are dug, fertilizer shall be placed in the bottom of the hole, two inches of soil shall be added and the plant shall be set in the hole.

MULCHING

Mulching is required for all permanent vegetation applications. Mulch applied to seeded areas shall achieve 75% to 100% soil cover. When selecting a mulch, design professionals should consider the mulch's functional longevity, vegetation establishment enhancement, and erosion control effectiveness. Select the mulching material from the following and apply as indicated:

1. **Dry straw or dry hay of good quality and free of weed seeds can be used. Dry straw shall be applied at the rate of 2 tons per acre. Dry hay shall be applied at a rate of 2 1/2 tons per acre.**
2. **Wood cellulose mulch or wood pulp fiber shall be used with hydraulic seeding. It shall be applied at the rate of 500 lbs/acre. Dry straw or dry hay shall be applied (at the rate indicated above) after hydraulic seeding.**
3. **1000 lbs. of wood cellulose or wood pulp fiber, which includes a tackifier, shall be used with hydraulic seeding on slopes 3/4:1 or steeper.**
4. **Sericea Lespedeza hay containing mature seed shall be applied at a rate of 3 tons per acre.**
5. **Pine straw or pine bark shall be applied at a thickness of 3 inches for bedding purposes. Other suitable materials in sufficient quantity may be used where ornamentals or other ground covers are planted. This is not appropriate for seeded areas.**
6. **When using temporary erosion control blankets or black sod, mulch is not required.**
7. **Bituminous treated roving may be applied on planted areas, slopes, in ditches, or dry waterways to prevent erosion. Bituminous treated roving shall be applied within 24 hours after an area has been planted. Application rates and materials must meet Georgia Department of Transportation specifications.**

Wood Cellulose and wood pulp fibers shall not contain germination or growth inhibiting factors. They shall be evenly dispersed when agitated in water. The fibers shall contain a dye to allow visual metering and aid in uniform application during seeding.

Applying Mulch
Straw or hay mulch will be spread uniformly within 24 hours after seeding and/or planting. The mulch may be spread by blower-type spreading equipment or by hand. Mulch shall be applied to cover 75% of the soil surface.
Wood cellulose or wood fiber mulch shall be applied uniformly with hydraulic seeding equipment.

Anchoring Mulch
Anchor straw or hay mulch immediately after application by one of the following methods:
1. Hay or straw mulch shall be pressed into the soil immediately after the mulch is spread. A special "packer disk" or disk harrow with the disks set straight may be used. The disks may be smooth or serrated and should be 20 inches or more in diameter and 8 to 12 inches apart. The edges of the disks shall be dull enough to press the mulch into the ground without cutting it, leaving much of it in an erect position. Mulch shall not be plowed into the soil.
2. Synthetic tackifiers, binders or hydraulic mulch specifically designed to tack straw, shall be applied in conjunction with or immediately after the mulch is spread. Synthetic tackifiers shall be mixed and applied according to manufacturer's specifications. All tackifiers, binders or hydraulic mulch specifically designed to tack straw should be verified nontoxic through EPA 2021.0 testing. Refer to Tac-Tackifiers.
3. Rye or wheat can be included with Fall and Winter plantings to stabilize the mulch. The shall be applied at a rate of 1/4 to 1/2 bushel per acre.
4. Plastic mesh or netting with mesh no larger than one inch by one inch may be needed to anchor straw or hay mulch on unstable soils and concentrated flow areas. These materials shall be installed and anchored according to manufacturer's specifications.

Bedding Material
Mulch is used as a bedding material to conserve moisture and control weeds in nurseries, ornamental beds, around shrubs, and on bare areas on lawns.

Material	Depth
Grain Straw	4"-6"
Grass Hay	4"-6"
Pine Needles	3"-5"
Wood Waste	4"-6"

Irrigation
Irrigation will be applied at a rate that will not cause runoff.

Topdressing
Topdressing will be applied on all temporary and permanent (perennial) species planted alone or in mixtures with other species. Recommended rates of application are listed in Table 6-5.1.

Second Year Maintenance Fertilization
Second year fertilizer rates and maintenance fertilizer rates are listed in Table 6-5.1.

Lime Maintenance Application
Apply one ton of agricultural lime every 4 to 6 years or as indicated by soil tests. Soil tests can be conducted to determine more accurate requirements, if desired.

Use and Management
Mow Sericea Lespedeza only after frost to ensure that the seeds are mature. Mow between November and March.
Bermudagrass, Bahiagrass and Tall Fescue may be mowed as desired. Maintain at least 6 inches of top growth under any use and management. Moderate use of top growth is beneficial after establishment.
Exclude traffic until the plants are well established. Because of the quail nesting season, mowing should not take place between May and September.

FERTILIZER REQUIREMENTS

TYPE OF SPECIES	YEAR	ANALYSIS OR EQUIVALENT	RATE	N TOP DRESSING RATE
1. Cool season grasses	First Second Maintenance	6-12-12 6-12-12 10-10-10	1500 lbs./ac. 1000 lbs./ac. 400 lbs.ac.	50-100 lbs./ac. 1/ 2/ ----- 30
2. Cool season grasses and legumes	First Second Maintenance	6-12-12 0-10-10 0-10-10	1500 lbs./ac. 1000 lbs/ac. 400 lbs.ac.	0-50 lbs./ac. 1/ ----- -----
3. Ground covers	First Second Maintenance	10-10-10 10-10-10 10-10-10	1300 lbs.ac 3/ 1300 lbs./ac. 3/ 1100 lbs./ac. 3/	----- ----- -----
4. Pine Seedlings	First	20-10-5	one 21-gram pellet per seedling placed in the closing hole	-----
5. Shrub Lespedeza	First Maintenance	0-10-10 0-10-10	700 lbs./ac. 700 lbs./ac. 4/	----- -----
6. Temporary cover crops seeded alone	First	10-10-10	500 lbs./ac.	30 lbs./ac. 5/
7. Warm season grasses	First Second Maintenance	6-12-12 6-12-12 10-10-10	1500 lbs./ac. 800 lbs./ac. 400 lbs./ac.	50-100 lbs./ac. 2/ 6/ 50-100 lbs./ac. 2/ 30 lbs./ac.
8. Warm season grasses and legumes	First Second Maintenance	6-12-12 0-10-10 0-10-10	1500 lbs./ac. 1000 lbs./ac. 400 lbs./ac.	50 lbs./ac. 6/

1/ Apply in spring following seeding.
2/ Apply in split applications when high rates are used.
3/ Apply in 3 split applications.
4/ Apply when plants are pruned.
5/ Apply to grass species only.
6/ Apply when plants grow to a height of 2 to 4 inches.

Ds3 DISTURBED AREA STABILIZATION (WITH PERMANENT VEGETATION)

PLANTS, PLANTING RATES, AND PLANTING DATES FOR PERMANENT COVER

SPECIES	BROADCAST RATES: Rate Per Acre[2]	BROADCAST RATES: PLS Per 1000 SF	RESOURCE AREA[1]	PLANTING DATES BY RESOURCE AREAS (Solid lines indicate optimum dates, dotted lines indicate permissible but marginal dates.) J F M A M J J A S O N D	REMARKS
BAHIA, PENSACOLA (Paspalum notatum)					166,000 seed per pound. Low growing. Sod forming. Slow to establish. Plant with a companion crop. Will spread into bermuda pastures and lawns. Mix with Sericea lespedeza or weeping lovegrass.
alone or with temporary cover	60 lbs.	1.4 lb.	P		
with other perennials	30 lbs.	0.7 lb.	C		
BAHIA, WILMINGTON (Paspalum notatum)					Same as above.
alone or with temporary cover	60 lbs.	1.4 lb.	M-L		
with other perennials	30 lbs.	0.7 lb.	P		
BERMUDA, COMMON (Cynodon dactylon) hulled seed					1,787,000 seed per pound. Quick cover. Low growing and sod forming. Full sun. Good for athletic fields.
alone	10 lbs.	0.2 lb.	P		
with other perennials	6 lbs.	0.7 lb.	C		
BERMUDA, COMMON (Cynodon dactylon) Unhulled seed					Plant with winter annuals Plant with Tall fescue
with temporary cover	10 lbs.	0.2 lb.	P		
with other perennials	6 lbs.	0.1 lb.	C		
BERMUDA SPRIGS (Cynodon dactylon)					A cubic foot contains approximately 650 sprigs. A bushel contains 1.25 cubic feet or approximately 800 sprigs.
Coastal, Common Midland, or Tifi 44	40 cu. Ft., 0.9 cu. Ft. sod plugs 3' x 3'	M-L			
Coastal, Common or Tifi 44		P C			Same as above
Tifi 78		C			Southern Coastal Plain Only.
CENTIPEDE (Eremochloa ophiuroides)	Block sod only	P C			Drought tolerant. Full sun or partial shade. Effective adjacent to concrete and in concentrated flow areas. Irrigation is needed until fully established. Do not plant near pastures. Winterhardy as far north as Athens and Atlanta.
CROWNVETCH (Coronilla varia)					100,000 seed per pound. Dense growth. Drought tolerant and fire resistant. Attractive rose, pink, and white blossoms spring to late fall. Mix with 30 pounds of Tall fescue or 15 pounds of rye.
with winter annuals or cool season grasses	15 lbs.	0.3 lb.	M-L P		
FESCUE, TALL (Festuca arundinacea)					227,000 seed per pound. Use alone only on better sites. Not for droughty soils. Mix with perennial lespedeza or Crownvetch. Apply topdressing in spring following fall plantings. Not for heavy use areas or athletic fields.
alone	50 lbs.	1.1 lb.	M-L		
with other perennials	30 lbs.	0.7 lb.	P		
KUDZU (Pueraria thumbergiana)					Rapid and vigorous growth. Excellent in gully erosion control. Will climb. Good livestock forage.
plants or crowns	3' - 7' apart		ALL		
LESPEDEZA SERICEA (Lespedeza cuneata)					350,000 seed per pound. Widely adapted. Low maintenance. Mix with Weeping lovegrass, Common bermuda, bahia, or tall fescue. Takes 2 to 3 years to become fully established. Excellent on roadbanks. Inoculate seed with EL inoculant Mix with Tall Fescue or winter annuals. Cut when seed is mature, but before it shatters. Add Tall fescue or winter annuals.
scarified	60 lbs.	1.4 lb.	M-L P C		
unscarified	75 lbs.	1.7 lb.	M-L P C		
seed-bearing hay	3 tons	138 lb.	M-L P C		
LESPEDEZA Ambro virgata (Lespedeza virgata DC) or Appalow (Lespedeza cuneata (Dumont) G. Don)					300,000 seed per pound. Height of growth is 18 to 24 inches. Advantageous in urban areas. Spreading-type growth. New growth has bronze coloration. Mix with weeping lovegrass, common bermuda, bahia, tall fescue or winter annuals. Do not mix with Sericea lespedeza. Slow to develop solid stands. Inoculate seed with EL inoculant.
scarified	60 lbs.	1.4 lb.	M-L P C		
unscarified	75 lbs.	1.7 lb.	M-L P		
LESPEDEZA, SHRUB (Lespedeza bicolor) (Lespedeza thunbergii)					Provide wildlife food and cover.
plants	3' x 3'		M-L P C		
LOVEGRASS, WEEPING (Eragrostis curvula)					1,500,000 seed per pound. Quick cover. Drought tolerant. Grows well with Sericea lespedeza on roadbanks.
alone	4 lbs.	0.1 lb.	M-L P		
with other perennials	2 lbs.	0.05 lb.	C		
MADDENCANE (Panicum hemitomon)					For very wet sites. May clog channels. Dig sprigs from local sources. Use along river banks and shorelines.
sprigs	2' x 3' spacing	ALL			
PANCGRASS, ATLANTIC COASTAL (Panicum amarum var. amarulum)					Grows well on coastal sand dunes, barrow areas, and gravel pits. Provides winter cover for wildlife. Mix with Sericea lespedeza except on sand dunes.
	20 lbs.	0.5 lb.	P C		
REED CANARY GRASS (Phalaris arundinacea)					Grows similar to Tall fescue.
alone	50 lbs.	1.1 lb.	M-L		
with other perennials	30 lbs.	0.7 lb.	P		
SUNFLOWER, 'AZTEC' MAXIMILLIAN (Helianthus maximilian)					227,000 seed per pound. Mix with Weeping lovegrass or other low-growing grasses or legumes.
	10 lbs.	0.2 lb.	M-L P C		

1/ Reduce seeding rates by 50% when drilled
2/ PLS is an abbreviation for Pure Live Seed. Refer to Section V.E. of these specifications.
3/ M-L represents to Mountain; Blue Ridge; and Ridges and Valleys MLRAs
4/ P represents the Southern Piedmont MLRA
5/ C represents the Southern Coastal Plain; Sand Hills; Black Lands; and Atlantic Coast Flatwoods MLRAs

BLUE LANDWORKS
CONSULTING ENGINEERS & SURVEYORS
LICENSE # PEF005518
LICENSE # LSF001044
5019 WEST BROAD STREET
SUITE M230
S

Di DIVERSION

NOT TO SCALE

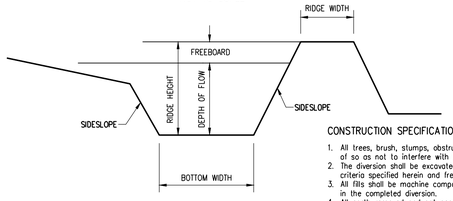

CONSTRUCTION SPECIFICATIONS

1. All trees, brush, stumps, obstructions, and other objectionable material shall be removed and disposed of so as not to interfere with the proper functioning of the diversion.
2. The diversion shall be excavated or shaped to line, grade, and cross section as required to meet the criteria specified herein and free of irregularities which will impede normal flow.
3. All fills shall be machine compacted as needed to prevent unequal settlement that would cause damage in the completed diversion.
4. All earth removed and not needed in construction shall be spread or disposed of so that it will not interfere with the functioning of the diversion.
5. Diversion channel shall be stabilized in accordance with specification Ch – Channel Stabilization.

Ch CHANNEL STABILIZATION

CHANNEL LININGS AND STRUCTURAL MEASURES

Where channel velocities exceed safe velocities for vegetated lining due to increased grade or a change in channel crosssection, or where durability of vegetative lining is adversely affected by seasonal changes, channel linings of rock, concrete or other durable material may be needed. Grade stabilization structures may also be needed. The following categories for flow velocities shall apply when selecting the channel lining:

Category 1 (less than 5 ft/sec*) Ch-1

Vegetated Lining

A vegetated lining may be used to stabilize channels with a velocity of less than 5 ft/sec temporary erosion control blankets or sod shall be used on all channels and concentrated flow areas to aid in the establishment of the vegetated lining. Refer to specifications Ds3 – Disturbed Area Stabilization (With Permanent Vegetation), Ds4 – Disturbed Area Stabilization (With Sodding), and Ss –Slope Stabilization, Hydraulic Erosion Control Products (HECPs) are not intended to be applied in channels, swales or other areas where concentrated flows are anticipated, unless installed in conjunction with Rolled Erosion Control Products (RECPs).

Category 2 (greater than or equal to 5 ft/sec* but less than 10 ft/sec*) Ch-2

Turf Reinforcement Matting (TRM)

Turf Reinforcement Matting (TRM) shall be used, if a vegetated lining is used in channels with velocities greater than or equal to 5 feet/sec but less than 10 ft/sec. TRM is permanent geosynthetic erosion control matting that is used in channels to stabilize the soil while permanent vegetation is rooting, and to provide additional long-term protection. Velocities in channels when flowing at the bankfull discharge or the 25-year frequency discharge, whichever is the greater, shall be used in determining the appropriate TRM for stabilization of the channels.

Rock Riprap Lining

Rock riprap shall be designed to resist displacement when the channel is flowing at the bankfull discharge or 25-year frequency discharge, whichever is the greater. Rock riprap lining should be used when channel velocities are greater than or equal to 5 ft/sec but less than 10 ft/sec. Dumped and machine placed riprap should not be installed on slopes steeper than 1-1/2 horizontal to 1 vertical. Rock shall be dense, resistant to the action of air and water, and suitable in all other respects for the purpose intended. Rock shall be installed according to standards specified in Riprap, Appendix C.

A filter blanket layer consisting of an appropriately designed graded filter sand and/or gravel or geotextile material shall be placed between the riprap and base material. The gradation of the filter blanket material shall be designed to create a graded filter between the base material and the riprap. A geotextile can be used as a substitution for a layer of sand in a graded filter or as the filter blanket. Criteria for selecting an appropriate geotextile and guidance for recommended drop heights and stone weights are found in AASHTO M288-96 Section 7.5, Permanent Erosion Control Specifications.

Category 3 (greater than or equal to 10 ft/sec*) Ch-3

Concrete Lining

If a channel has velocities high enough to require a concrete lining (when channel velocities exceed 10 ft/sec), methods should be utilized to reduce the velocity of the runoff and reduce erosion at the outlet – a common problem created by the smooth, concrete lining. Refer to specifcation St – Storm Drain Outlet Protection for information regarding energy dissipators. If a concrete lining is chosen, it shall be designed according to currently accepted guides for structural and hydraulic adequacy. It must be designed to carry the required discharge and to withstand the loading imposed by site conditions. A separation geotextile should be placed under concrete linings to prevent undermining in the event of stress cracks due to settlement of the base material. The separation geotextile will keep the base material soils in place and minimize the likelihood of a system failure.

Grade Stabilization Structures

Grade stabilization structures are used to reduce or prevent excessive erosion by reduction of velocities in the watercourse or by providing structures that can withstand and reduce the higher velocities. They may be constructed of concrete, rock, masonry, steel, aluminum, or treated wood. These structures are constructed where the capability of earth and vegetative measures is exceeded in the safe handling of water at permissible velocities, where excessive grades or overall conditions are encountered or where water is to be lowered structurally from one elevation to another. These structures should generally be planned and installed along with or as a part of other erosion control practices. The structures shall be designed hydraulically to adequately carry the channel discharge and structurally to withstand loadings imposed by the site conditions. The structure shall meet requirements of Gr – Grade Stabilization Structure.

* The equivalent shear stress may also be used to determine the appropriate measure.

Cd-S STONE CHECK DAM

NOT TO SCALE

STONE CHECK DAMS

STONE CHECK DAMS SHOULD BE CONSTRUCTED OF GRADED SIZE 2-10 INCH STONE. (SEE FIGURE 6-10.2) MECHANICAL OR HAND PLACEMENT SHALL BE REQUIRED TO ENSURE COMPLETE COVERAGE OF ENTIRE WIDTH OF DITCH OR SWALE AND THAT CENTER OF DAM IS LOWER THE EDGES.

GEOTEXTILES

A GEOTEXTILE SHOULD BE USED AS A SEPARATOR BETWEEN THE GRADED STONE AND THE SOIL BASE AND ABUTMENTS. THE GEOTEXTILE WILL PREVENT THE MIGRATION OF SOIL PARTICLES FROM THE SUBGRADE INTO THE GRADED STONE. THE GEOTEXTILE SHALL BE SELECTED/SPECIFED IN ACCORDANCE WITH AASHTO M288-06 SECTION 7.3, SEPARATION REQUIREMENTS, TABLE 3. GEOTEXTILES SHALL BE "SET" INTO THE SUBGRADE SOILS. THE GEOTEXTILE SHALL BE PLACED IMMEDIATELY ADJACENT TO THE SUBGRADE WITHOUT ANY VOIDS AND EXTEND FIVE FEET BEYOND THE DOWNSTREAM TOE OF THE DAM TO PREVENT SCOUR.

MAINTENANCE

PERIODIC INSPECTION AND REQUIRED MAINTENANCE MUST BE PROVIDED. SEDIMENT SHALL BE REMOVED WHEN IT REACHES A DEPTH OF ONE-HALF THE ORIGINAL DAM HEIGHT OR BEFORE. IF THE AREA IS TO BE MOWED, CHECK DAMS SHALL BE REMOVED ONCE FINAL STABILIZATION HAS OCCURRED; OTHERWISE, CHECK DAMS MAY REMAIN IN PLACE PERMANENTLY. AFTER REMOVAL, THE AREA BENEATH THE DAM SHALL BE SEEDED AND MULCHED IMMEDIATELY.

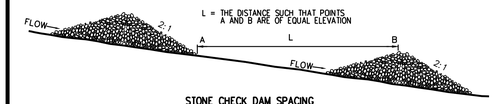

STONE CHECK DAM SPACING

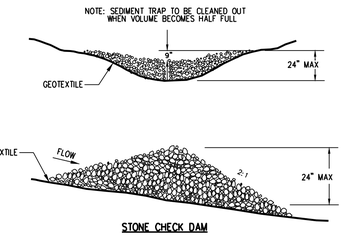

STONE CHECK DAM

NOTES:

1. CHECK DAMS ARE TO BE USED ONLY IN SMALL OPEN CHANNELS (THEY ARE NOT TO BE USED IN LIVE STREAMS).
2. THE DRAINAGE AREA FOR STONE CHECK DAMS SHALL NOT EXCEED TWO ACRES.
3. THE CENTER OF THE CHECK DAM MUST BE AT LEAST 9 INCHES LOWER THAN THE OUTER EDGES.
4. THE DAM HEIGHT SHOULD BE A MAXIMUM OF 2 FEET FROM CENTER TO RIM EDGE.
5. THE SIDE SLOPES OF THE CHECK DAM SHALL NOT EXCEED A 2:1 SLOPE.
6. GEOTEXTILE SHALL BE USED TO PREVENT THE MITIGATION OF SUBGRADE SOIL PARTICLES INTO THE STONES (REFER TO AASHTO M288-96, SECTION 7.3, TABLE 3).

Fr FILTER RING

NOT TO SCALE

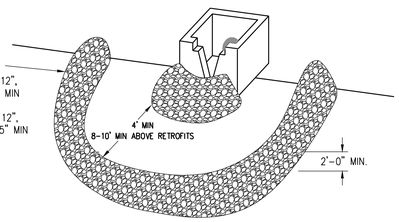

CONSTRUCTION SPECIFICATIONS

Mechanical or hand placement of stone shall be required to uniformly surround the structure to be supplemented. Refer to rock riprap specifications shown within these plans.

The filter ring may be constructed on natural ground surface, on an excavated surface, or on machine compacted fill. The filter ring shall surround all sides of the structure receiving runoff from disturbed areas.

A common failure of filter rings is caused by their placement too close or too high above the structure it is enhancing. When utilized below a storm drain outlet, it shall be placed such that it does not create a condition causing water to back-up into the storm drain and inhibit the function of the storm drain system.

MAINTENANCE

The filter ring must be kept clear of trash and debris. This will require continuous monitoring and maintenance, which includes sediment removal when one-half full. Structures are temporary and should be removed when the land-disturbing project has been stabilized.

Tr TREE PROTECTION

"SNOW" FENCE

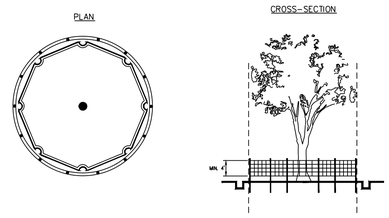

NOTES:

1. USE TRENCHER (I.E. DITCH WHICH) TO CUT A 4"-5" W X 18" D TRENCH ALONG DRIP LINE (LIMIT OF CLEARING) AND BACKFILL WITH SAND AND LIGHTLY COMPACT.
2. SPACE STAKES AT INTERVALS SUFFICIENT TO MAINTAIN ALL FENCING OUT OF DRIP LINE OR AS SHOWN BY ENGINEER (SET STAKES NO GREATER THAN 6 FEET ON CENTER-REBAR IS NOT TO BE USED FOR STAKES).
3. MAINTAIN FENCE BY REPAIRING AND/OR REPLACING DAMAGED FENCE. DO NOT REMOVE FENCING PRIOR TO LANDSCAPING OPERATIONS.
4. DO NOT STORE OR STACK MATERIALS, EQUIPMENT, OR VEHICLES WITHIN FENCED AREA.
5. FENCE SHALL BE ORANGE VINYL "SNOW FENCE" 4' HIGH MINIMUM.

Sk FLOATING SURFACE SKIMMER

NOT TO SCALE

NOTE:
SKIMMER CONFIGURATION SHOWN IS TYPICAL. THE DESIGNER/ENGINEER MAY SUBMIT AN ALTERNATE SKIMMER DETAIL FOR REVIEW.

SKIMMER PERSPECTIVE

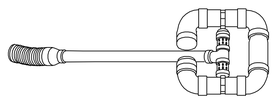

SKIMMER FRONTAL SECTION VIEW

SKIMMER SIDE SECTION VIEW

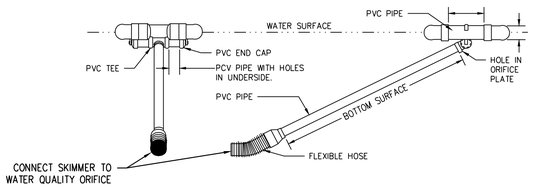

Product Designs

One end of a rigid tube is connected to the barrel of the discharge system via a flexible coupling. The other end of the tube floats at the water surface. The flexible coupling allows the rigid tube to articulate as the water level changes. A screen at the inlet prevents floating trash from entering the tube. Each product (and each product size) has a unique design, including the associated hydraulics that are affected by the floatation, inlet, and connecting tube/coupling designs chosen.

Floatation Requirements

Floating surface skimmers that sink or completely suspend under the water surface are not acceptable. A portion of the skimmer must be visible above the water surface at all times. The location of the floating "headworks" relative to the water surface, and the size and location of vents and inlets, must be the same as when the product was tested for flow rates. This should be verified and documented as inherent to the product design during flow testing.

Trash Guard & Maintenance Rope

All Floating surface skimmer designs include a trash guard and maintenance rope in order to prevent and remove blockage from floating debris. Trash guards prevent larger debris from entering the skimmer that may cause internal blockage. The maintenance rope is used to remove trash and debris that accumulates on the outside of the trash guard. Ensure the maintenance rope is floatable.

Skimmer Pit

Excavate a shallow pit filled with riprap under the floating surface skimmer to account for sediment that accumulates on the sediment basin bottom around the skimmer. The pit allows the skimmer to completely drain the basin. At a minimum, the pit has dimensions of 4ft x 4ft with a minimum depth of 2 ft. Ensure the bottom of the pit is lower than the invert of the outlet barrel from the riser. Floating Skimmers that have a footed design that prevents the device from lodging in accumulated sediment do not require a skimmer pit.

CONSTRUCTION SPECIFICATIONS

Materials

Use floating surface skimmers made of PVC (Schedule 40 or greater) or other appropriate materials.

Quality Assurance

Each skimmer must have documented identification, including but not limited to the following:

- Manufacturer's name and location.
- Manufacturer's telephone number and fax number.
- Manufacturer's e-mail and web address.
- Skimmer name, model, and/or serial number.
- Skimmer dimensions.
- Certification that the skimmer meets the physical and performance criteria of this specification.

Installation

Install the device according to the manufacturer's instructions.

Additional Information

A shut-off valve to facilitate skimmer main-tenance or emergency regulation of the flow discharge rate, installed at the discharge end of the barrel as it exits the embankment is recom-mended. (Normal skimmer operation is to be based on the "full open" valve setting.) A storm drain outlet protection device shall be installed at the barrel discharge point.

MAINTENANCE

Inspect Floating Skimmers together with the Sediment Basin inspections. Inspect the floating surface skimmer for any structural damage, clogging, or excessive sediment accumulation.

While draining the basin, the trash guard of the skimmer may clog with debris. Typically, a few jerks on the maintenance rope will clear the skimmer of debris and restore flow. If jerking the maintenance rope does not work, pull the skimmer to the embankment with the maintenance rope and manually remove all debris from the trash guard. An internal clog or blockage may require the device to be disassembled and repaired.

If the skimmer becomes stuck in the mud at the bottom of the basin it must be freed to allow for normal operation. This can typically be done by use of the maintenance rope. Remove sediment deposits from the basin when approximately one-third of the storage volume has been lost to sediment accumulation or when the floating skimmer cannot settle low enough to drain the entire basin. Remove or pull the skimmer to a side embankment using the maintenance rope and remove sediment from the skimmer pit.

FLOATING SURFACE SKIMMER (Sk) SIZING INFORMATION

Sk #1

1. POND, TRAP OR BASIN SIZE
   TOP LENGTH x WIDTH = 1250'x65'
   BOTTOM LENGTH x WIDTH = 110'x50'
   DEPTH = 6.0'
   PROVIDED VOLUME = 89,092 CF (AT TOP OF DAM)
   REQUIRED SEDIMENT STORAGE = 11,776 CF (67 CY/AC * 6.51 AC DISTURBED AREA)
   BOTTOM ELEVATION = 1090.0
   TOP ELEVATION = 1096.0 (TOP OF DAM)
   CLEANOUT ELEVATION = 1092.3
2. TIME TO DRAIN (hrs) = 24 (EMERGENCY SPILLWAY ELEVATION 1094.5)
3. SKIMMER DIMENSIONS (ORIFICE & HEAD SIZE) (inches) = 6"
4. MANUFACTURER NAME = IAS (OR EQUIVALENT)

Ss SLOPE STABILIZATION

NOT TO SCALE

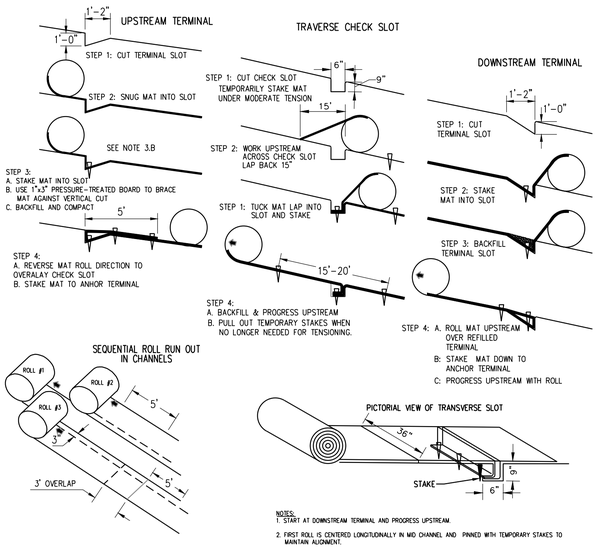

NOTES:

1. START AT DOWNSTREAM TERMINAL AND PROGRESS UPSTREAM.
2. FIRST ROLL IS CENTERED LONGITUDINALLY IN MID CHANNEL AND PINNED WITH TEMPORARY STAKES TO MAINTAIN ALIGNMENT.
3. SUBSEQUENT ROLLS FOLLOW IN STAGGERED SEQUENCE BEHIND FIRST ROLL. USE CENTER ROLL FOR ALIGNMENT TO CHANNEL CENTER.
4. WORK OUTWARDS FROM CHANNEL CENTER TO EDGE.
5. USE 3' OVERLAP AND STAKE AT 5' INTERVAL ALONG SEAMS.
6. USE 3' OVERLAPS AND SHINGLE DOWNSTREAM TO CONNECT LINING AT ROLL ENDS.

Rolled Erosion Control Products

A natural fiber blanket with single or double photodegradable or biodegradable nets.

Materials – RECP

Blankets shall be nontoxic to vegetation, seed, or wildlife. Products shall be determined to be non-toxic in accordance with EPA-821-R-02-012. At minimum, the plastic or biodegradable netting shall be stitched to the fibrous matrix to maximize strength and provide for ease of handling.

RECP's are categorized as follows:

a. Short-Term (functional longevity 12 mo.)
   i. Photodegradable
      Straw blankets with a top and bottom side photodegradable net. The maximum size of the mesh shall be openings of 0.5"x0.5". The blanket should be sewn together on 1.5" centers with degradable thread. Minimum thickness should be 0.35" and minimum density should be 0.5 lbs per square yard.
   ii. Biodegradable
      Straw blanket with a top and bottom side biodegradable jute net. The top side net shall consist of machine direction strands that are twisted together and the interwoven with cross direction strands (leno weave). The bottom net may be leno weave or otherwise to meet requirements. The approximate size of the mesh shall be openings of 0.5"x1.0". The blanket should be sewn together on 1.5" centers with degradable thread. Minimum thickness should be 0.25" and minimum density should be 0.5 lbs per square yard.
b. Extended-Term (functional longevity 24 mo.)
   i. Photodegradable
      Blankets that consist of 70% straw and 30% coconut with a top and bottom side photodegradable net. The top net should have ultraviolet additives to delay breakdown. The maximum size of the mesh shall be opening of 0.65"x0.65". The blanket should be sewn together on 1.5" centers with degradable thread. Minimum thickness should be 0.35" and minimum density should be 0.6 lbs per square yard.
   ii. Biodegradable
      Blankets that consist of 70% straw and 30% coconut with a top and bottom side biodegradable jute net. The top side net shall consist of machine direction strands that are twisted together and then interwoven with cross direction strands (leno weave). The bottom net may be leno weave or otherwise to meet requirements. The approximate size of the mesh shall be openings of 0.5"x1.0". The blanket should be sen together on 1.5" centers with degradable thread. Minimum thickness should be 0.25" and minimum density should be 0.65 lbs per square yard.
c. Long-Term (functional longevity 36 mo.)
   i. Photodegradable
      Blankets that consist of 100% coconut with a top and bottom side photodegradable net. Each net should have ultraviolet additives to delay breakdown. The maximum size of the mesh shall be openings of 0.65"x0.65". The blanket should be sewn together on 1.5" centers with degradable thread. Minimum thickness should be 0.3" and minimum density should be 0.5 lbs per square yard.
   ii. Biodegradable
      Blankets consist of 100% coconut with a top and bottom side biodegradable jute net. The top side net shall consist of machine direction strands that are twisted together and then interwoven with cross direction strands (leno weave). The bottom net may be lenta weave or otherwise to meet requirements. The approximate size of the mesh shall be openings of 0.5"x1.0". The blanket should be sewn together on 1.5" centers with degradable thread. Minimum thickness should be 0.25" and minimum density should be 0.5 lbs per square yard.

Hydraulic Erosion Control Products (HECP)

HECP shall utilize straw, cotton, wood or other natural based fibers held together by a soil biding agent which works to stabilize soil particles. Paper mulch should not be used for erosion control.

Materials – HECP

Hydraulic erosion control products shall be prepackaged from the manufacturer. Field mixing of performance enhancing additives will not be allowed. Fibrous components should be all natural or biodegradable. Products shall be determined to be non-toxic in accordance with EPA-821-R-02-012.

CRITERIA

Rolled Erosion Control Products (RECPs) and Hydraulic Erosion Control Products (HECPs):

- Installation and stapling of RECPs and application rates for the HECPs shall conform to manufacturer's guidelines for application
- Short-term RECPs as a minimum shall be used to stabilize concentrated flow areas with a velocity less than 5ft/sec on slopes 3:1 or greater with a height of 10 feet or greater.

SITE PREPARATION

After the site has been shaped and graded to the approved design, prepare a friable seedbed relatively free from clods and rocks more than one inch in diameter, and any foreign material that will prevent contact of the soil stabilization mat with the soil surface. Surface must be smooth to ensure proper contact of blankets or matting to the soil surface. If necessary, redirect any runoff from the ditch or slope during installation.

MAINTENANCE

All erosion control blankets and matting should be inspected periodically following installation, particularly after rainstorms to check for erosion and undermining. Any dislocation or failure should be repaired immediately. If washouts or breakage occurs, reinstall the material after repairing damage to the slope or ditch. Continue to monitor these areas until they become permanently stabilized.

BLUE LANDWORKS
CONSULTING ENGINEERS & SURVEYORS
LICENSE # PEF005518
LICENSE # LSF001044
5019 WEST BROAD STREET
SUITE M230
SUGAR HILL, GEORGIA 30518
TELEPHONE: (678) 804-8586
INFO@BLUELANDWORKS.COM
WWW.BLUELANDWORKS.COM

PREPARED FOR:
VILLAGE PARK SENIOR LIVING, LLC
11 WEST PARIS AVE SUITE 1700
ATLANTA, GA 30326
PHONE:
CONTACT: BRYAN WATSON
EMAIL: bryan@bparcdevelop.com

GEORGIA REGISTERED No. 27087 PROFESSIONAL ENGINEER JONATHAN H. NIXOL

ISSUE #	DATE	REVISIONS
1	10/12/2021	SUBMIT FOR REVIEW

VILLAGE PARK MILTON
PHASE TWO
11940 ALPHARETTA HIGHWAY

PARCEL(S) 12-2340060006
CITY OF ALPHARETTA
LAND LOT 600L 1ST DISTRICT
FULTON COUNTY, GA
DRAWN: CC
CHECKED: JN

EROSION CONTROL
DETAIL SHEET

PROJECT# 2019.099

E-112

V:\2019-099 - 11940 Alpharetta Hwy\1000 - AutoCAD\30 - Construction\2019.099 IP Milton_EROSION.dwg, E-112 10/12/2021 9:37 AM by Carter Holt

CONCRETE WASHDOWN AREA

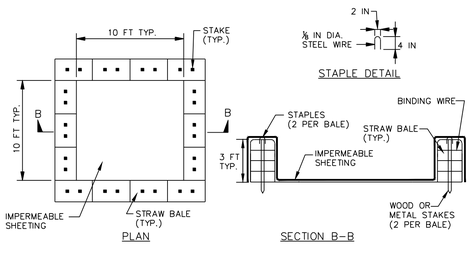

NOTE: CAN BE TWO STACKED BALES OR PARTIALLY EXCAVATED TO REACH 3 FT DEPTH

WASHOUT STRUCTURE WITH STRAW BALES

CONSTRUCTION SPECIFICATIONS

1. LOCATE WASHOUT STRUCTURE A MINIMUM OF 50 FEET AWAY FROM OPEN CHANNELS, STORM DRAIN INLETS, SENSITIVE AREAS, WETLANDS, BUFFERS AND WATER COURSES AND AWAY FROM CONSTRUCTION TRAFFIC.
2. SIZE WASHOUT STRUCTURE FOR VOLUME NECESSARY TO CONTAIN WASH WATER AND SOLIDS AND MAINTAIN AT LEAST 4 INCHES OF FREEBOARD. TYPICAL DIMENSIONS ARE 10 FEET X 10 FEET X 3 FEET DEEP.
3. PREPARE SOIL BASE FREE OF ROCKS OR OTHER DEBRIS THAT MAY CAUSE TEARS OR HOLES IN THE LINER. FOR LINER, USE 10 MIL OR THICKER UV RESISTANT, IMPERMEABLE SHEETING, FREE OF HOLES AND TEARS OR OTHER DEFECTS THAT COMPROMISE IMPERMEABILITY OF THE MATERIAL.
4. PROVIDE A SIGN FOR THE WASHOUT IN CLOSE PROXIMITY TO THE FACILITY.
5. KEEP CONCRETE WASHOUT STRUCTURE WATER TIGHT. REPLACE IMPERMEABLE LINER IF DAMAGED (E.G., RIPPED OR PUNCTURED). EMPTY OR REPLACE WASHOUT STRUCTURE THAT IS 75 PERCENT FULL, AND DISPOSE OF ACCUMULATED MATERIAL PROPERLY. DO NOT REUSE PLASTIC LINER. WET-VACUUM STORED LIQUIDS THAT HAVE NOT EVAPORATED AND DISPOSE OF IN AN APPROVED MANNER. PRIOR TO FORECASTED RAINSTORMS, REMOVE LIQUIDS OR COVER STRUCTURE TO PREVENT OVERFLOWS. REMOVE HARDENED SOLIDS, WHOLE OR BROKEN UP, FOR DISPOSAL OR RECYCLING. MAINTAIN RUNOFF DIVERSION AROUND EXCAVATED WASHOUT STRUCTURE UNTIL STRUCTURE IS REMOVED.

(Co) CRUSHED STONE CONSTRUCTION EXIT

EXIT DIAGRAM

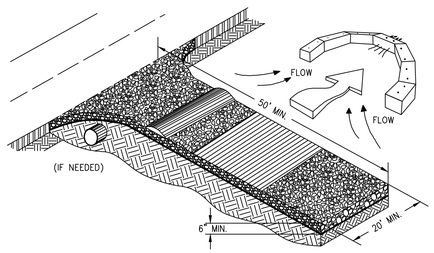

ENTRANCE ELEVATION

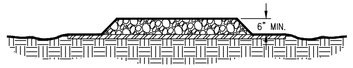

NOTES:
1. AVOID LOCATING ON STEEP SLOPES OR AT CURVES ON PUBLIC ROADS.
2. REMOVE ALL VEGETATION AND OTHER UNSUITABLE MATERIAL FROM THE FOUNDATION AREA, GRADE, AND CROWN FOR POSITIVE DRAINAGE.
3. AGGREGATE SIZE SHALL BE IN ACCORDANCE WITH NATIONAL STONE ASSOCIATION R-2 (1.5"-3.5" STONE).
4. GRAVEL PAD SHALL HAVE A MINIMUM THICKNESS OF 6".
5. PAD WIDTH SHALL BE EQUAL FULL WIDTH AT ALL POINTS OF VEHICULAR EGRESS, BUT NO LESS THAN 20'.
6. A DIVERSION RIDGE SHOULD BE CONSTRUCTED WHEN GRADE TOWARD PAVED AREA IS GREATER THAN 2%.
7. INSTALL PIPE UNDER THE ENTRANCE IF NEEDED TO MAINTAIN DRAINAGE DITCHES.
8. WHEN WASHING IS REQUIRED, IT SHOULD BE DONE ON AN AREA STABILIZED WITH CRUSHED STONE THAT DRAINS INTO AN APPROVED SEDIMENT TRAP OR SEDIMENT BASIN (DIVERT ALL SURFACE RUNOFF AND DRAINAGE FROM THE ENTRANCE TO A SEDIMENT CONTROL DEVICE).
9. WASHRACKS AND/OR TIRE WASHERS MAY BE REQUIRED DEPENDING ON SCALE AND CIRCUMSTANCE. IF NECESSARY, WASHRACK DESIGN MAY CONSIST OF ANY MATERIAL SUITABLE FOR TRUCK TRAFFIC THAT REMOVE MUD AND DIRT.
10. MAINTAIN AREA IN A WAY THAT PREVENTS TRACKING AND/OR FLOW OF MUD ONTO PUBLIC RIGHTS-OF-WAYS. THIS MAY REQUIRE TOP DRESSING, REPAIR AND/OR CLEANOUT OF ANY MEASURES USED TO TRAP SEDIMENT.

(Sd1 S) SILT FENCE - TYPE SENSITIVE

SIDE VIEW

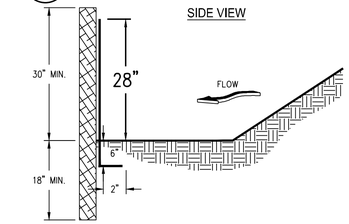

FRONT VIEW

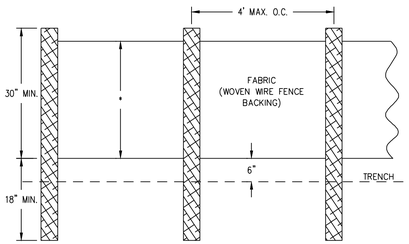

NOTES:
1. USE STEEL OR WOOD POSTS OR AS SPECIFIED BY THE EROSION, SEDIMENTATION, AND POLLUTION CONTROL PLAN.
2. HEIGHT (*) IS TO BE SHOWN ON THE EROSION, SEDIMENTATION, AND POLLUTION CONTROL PLAN. (* = 28 INCHES)

FASTENERS FOR SILT FENCES

OVERLAP AT FABRIC ENDS

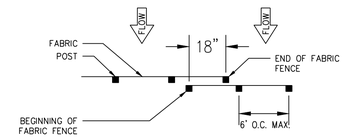

TOP VEIW - NOT TO SCALE

FRONT VIEWS - NOT TO SCALE

NOTES:
1. THE FABRIC AND WIRE SHOULD BE SECURELY FASTENED TO POSTS AND FABRIC ENDS MUST BE OVERLAPPED A MINIMUM OF 18" OR WRAPPED TOGETHER AROUND A POST TO PROVIDE A CONTINUOUS FABRIC BARRIER AROUND THE INLET.

(Re) RETAINING WALL

DEFINITION

A wall constructed of one or more of the following: concrete masonry, reinforced concrete cribbing, treated timbers, steel pilings, gabions, stone drywall, rock riprap, etc.

PURPOSE

To assist in the stabilization of cut or fill slopes where stable slopes are not attainable without the use of the wall.

CONDITIONS

Use in conjunction with cut or fill slopes that, because of space limitations or unstable mate-rial, do not allow the stable slope criteria listed above, e.g. cuts into steep hillsides on small lots or cuts into hillsides behind shopping centers to provide loading space.

DESIGN CRITERIA

General

The design of a retaining wall is a complicated process. Many factors must be taken into account such as: stresses and forces outside and within the wall, allowable height and minimum thickness. Other considerations are: foundation design with respect to loadings, bearing values of soils and footing dimensions. Additional design factors are safety hazards, subsurface and surface drainage and appearance. Each situation requires a specific design that is within the capabilities of the design professional. Consideration should be given to all of the alternative methods with regard to construction of the wall. Some methods are:

1. Concrete masonry
2. Concrete cribbing
3. Gabions
4. Steel piling
5. Stone drywall
6. Rock riprap, etc.
7. Treated timbers
8. Geotextile wrapped-face wall
9. Geotextile reinforced steep slopes

(Sd2 G) INLET SEDIMENT TRAP GRAVEL DROP INLET PROTECTION

NOT TO SCALE

NOTE: TO BE REPLACED WITH (Sd2 P) FOR IN-STREET INLETS AFTER STREET PAVING IS COMPLETE (SEE DETAIL THIS SHEET)

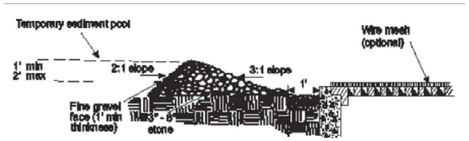

Figure 6-28.4 Gravel Drop Inlet Protection

CONSTRUCTION SPECIFICATIONS

This method of inlet protection is applicable where heavy concentrated flows are expected. Stone and gravel are used to trap sediment. The slope toward the inlet shall be no steeper than 3:1. A minimum 1 foot wide level stone area shall be left between the structure and around the inlet to prevent gravel from entering the inlet. On the slope toward the inlet, stone 3 inches in diameter and larger should be used. On the slope away from the inlet, 1/2 to 3/4 inch gravel (#57 washed stone) should be used at a minimum thickness of 1 foot.

MAINTENANCE

The trap shall be inspected daily and after each rain and repairs made as needed.

Sediment shall be removed when the sediment has accumulated to one-half the height of the trap. Sediment shall be removed from curb inlet protection immediately. For excavated inlet sediment traps, sediment shall be removed when one-half of the sediment storage capacity has been lost to sediment accumulation. Sod inlet protection shall be maintained as specified in Ds4-Disturbed Area Stabilization (with sodding).

Sediment shall not be washed into the inlet. It shall be removed from the sediment trap and disposed of and stabilized so that it will not enter the inlet, again.

When the contributing drainage area has been permanently stabilized, all materials and any sediment shall be removed, and either salvaged or disposed of properly. The disturbed area shall be brought to proper grade, then smoothed and compacted. Appropriately stabilize all disturbed areas around the inlet.

(Sd2 P) CURB INLET FILTER "PIGS IN BLANKET"

PLAN

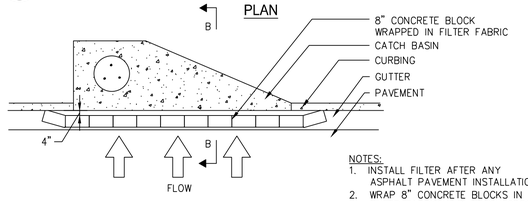

SECTION B-B

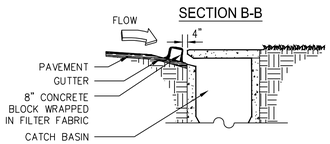

NOTES:
1. INSTALL FILTER AFTER ANY ASPHALT PAVEMENT INSTALLATION.
2. WRAP 8" CONCRETE BLOCKS IN FILTER FABRIC AND SPAN ACROSS CATCH BASIN INLET.
3. FACE OPENINGS IN BLOCKS OUTWARD.
4. LEAVE A GAP OF APPROXIMATELY 4 INCHES BETWEEN THE CURB AND THE FILTERS TO ALLOW FOR OVERFLOW TO PREVENT HAZARDOUS PONDING.
5. INSTALL OUTLET PROTECTION BELOW STORM DRAIN OUTLETS.

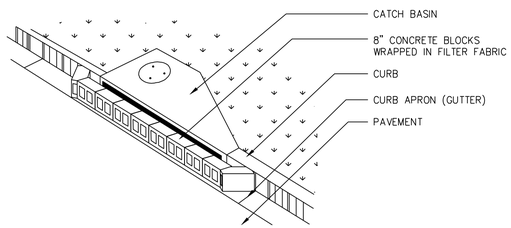

INLET FILTER FOR GRATE INLETS

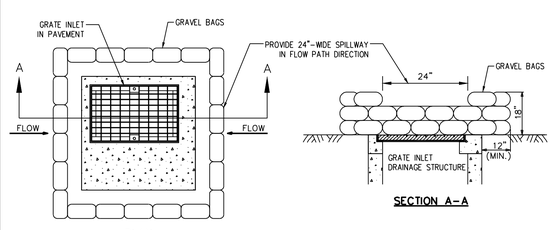

PLAN

SECTION A-A

(St) RIPRAP OUTLET PROTECTION

PIPE OUTLET TO FLAT AREA -- NO WELL DEFINED CHANNEL

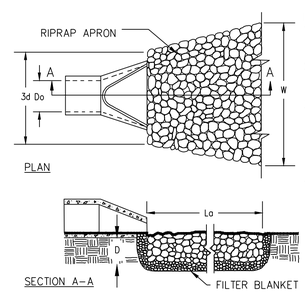

NOTES:
1. Lo IS THE LENGTH OF THE RIPRAP APRON.
2. D = 1.5 TIMES THE MAXIMUM STONE DIAMETER BUT NOT LESSTHAN 6".
3. IN A WELL-DEFINED CHANNEL, EXTEND THE APRON UP THE CHANNEL BANKS TO AN ELEVATION OF 6" ABOVE THE MAXIMUM TAILWATER DEPTH OR TO THE TOP OF THE BANK (WHICHEVER IS LESS).
4. A FILTER BLANKET OR FILTER FABRIC SHOULD BE INSTALLED BETWEEN THE RIPRAP AND THE SOIL FOUNDATION.

PIPE OUTLET TO WELL DEFINED CHANNEL

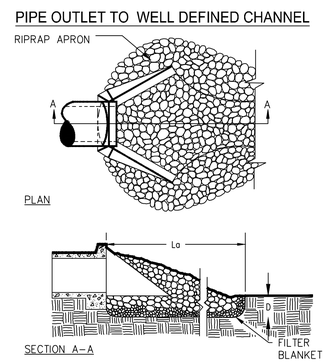

(Sd1 S) DOUBLE ROW SILT FENCE LOCATION

SIDE VIEW

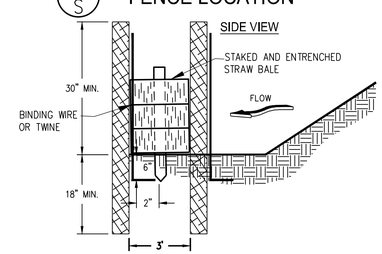

BLUE LANDWORKS
CONSULTING ENGINEERS & SURVEYORS
LICENSE # PE0005518
LICENSE # LSF001044
5019 WEST BROAD STREET
SUITE M230
SUGAR HILL, GEORGIA 30518
TELEPHONE: (678) 804-8586
INFO@BLUELANDWORKS.COM
WWW.BLUELANDWORKS.COM

PREPARED FOR:
VILLAGE PARK SENIOR LIVING, LLC
1 PERIMETER PARK SOUTH, SUITE 175D
ATLANTA, GA 30328
PHONE: 678 677-8600
CONTACT: BRYAN SPERLING/DESIGN
EMAIL: bryan@sperlaining.com

GEORGIA REGISTERED No. 27087 PROFESSIONAL ENGINEER JONATHAN H. NICOL

ISSUE #	DATE	REVISIONS
1	10/12/2021	SUBMIT FOR REVIEW

VILLAGE PARK MILTON
PHASE TWO
11940 ALPHARETTA HIGHWAY

PARCEL(S) 12-2340600566
CITY OF ALPHARETTA
LAND LOT 600, 1ST DISTRICT
FULTON COUNTY, GA
DRAWN: CC
CHECKED: JN

EROSION CONTROL DETAIL SHEET

PROJECT# 2019.099

E-113

V:\2019-099 - 11940 Alpharetta Hwy\1000 - AutoCAD\30 - Construction\2019.099 VP Milton_EROSION.dwg, E-113, 10/12/2021 9:37 AM by Carter Hall

GENERAL NOTES

1. OWNER/DEVELOPER: **VILLAGE PARK SENIOR LIVING, LLC**
   3424 PEACHTREE RD SUITE 1780
   ATLANTA, GA 30326
   TEL: 678 677-8900
   CONTACT: BRYAN HENDERSON – bryan@galerieliving.com
2. ENGINEER: **BLUE LANDWORKS LLC**
   5019 WEST BROAD STREET
   SUITE M230
   SUGAR HILL, GEORGIA 30518
   TEL: 678-804-8586
   CONTACT: TAYLOR ANDERSON, PE
   GA PE #28657
   GA SSWCC LEVEL II CERTIFIED DESIGN PROFESSIONAL #3414
3. THIS PROPERTY IS SHOWN ON FULTON COUNTY TAX MAPS AS BEING PART OF THE 1ST LAND DISTRICT, LAND LOT 60, PARCEL ID(S) 12–2340060000566 AND CONTAINING 4.97 ACRES.
4. THIS PROPERTY IS ZONED O-I (OFFICE INSTITUTIONAL).
5. PROPOSED USE: ASSISTED LIVING
   TOTAL AREA = 4.93 ACRES
   NUMBER OF UNITS MAIN BUILDING = 71
   NUMBER OF COTTAGE UNITS = 20
   TOTAL NUMBER OF UNITS = 91
   DENSITY UNITS/ACRE = 18.46
   INTERIOR SETBACKS:
   MINIMUM FRONT SETBACK: 65 FEET
   MINIMUM SIDE SETBACK: 15 FEET
   MINIMUM REAR SETBACK: 15 FEET
6. THERE IS NO FLOODPLAIN ON THIS PROPERTY PER FEMA NFIP FIRM PANEL NO. 13121C0054F, DATED 9/18/13.
7. PARKING REQUIRED:
   GROUP HOME: 1 SPACE / 2 UNITS
   TOTAL UNITS MAIN BUILDING = 69
   REQUIRED SPACES = 69/2 = 35 SPACES
   (COTTAGES HAVE GARAGE OR DRIVEWAY PARKING)

   PARKING PROVIDED:
   PROPOSED STANDARD SPACES = 14 SPACES
   PPROPOSED PARKING GARAGE SPACES = 65 SPACES
   PROPOSED HANDICAP ACCESSIBLE SPACES = 4 SPACES
   TOTAL PROPOSED SPACES = 85 SPACES
8. THIS SITE DOES NOT CONTAIN AREAS, STREAMS, AND/OR BODIES OF WATER DEPICTED AS WETLANDS ON THE U.S. DEPARTMENT OF INTERIOR, FISH, AND WILDLIFE SERVICE NATIONAL WETLANDS INVENTORY.
9. SOURCE OF TOPOGRAPHY IS FULTON COUNTY GIS. CONTOUR INTERVAL IS 2 FEET. REFERENCE DATUM IS NAVD 88.
10. WATER DISTRIBUTION AND SANITARY SEWER SERVICE TO BE PROVIDED BY FULTON COUNTY.
11. THIS SITE DOES NOT CONTAIN STATE WATERS REQUIRING AN UNDISTURBED 25' STATE WATERS BUFFER.
12. "SURVEY FOR 11940 ALPHARETTA HIGHWAY FOR VILLAGE PARK SENIOR LIVING, LLC" BY BLUE LANDWORKS, LLC DATED DECEMBER 30, 2019.

TREE ID	SIZE (INCHES)	TYPE
1	28	OAK
2	14	SYCAMORE
3	12	OAK
4	10	OAK
~~5~~	~~11~~	~~MAPLE~~
6	10	PINE
7	10	PINE
8	10	PINE
9	10	PINE
10	10	PINE
11	8	PINE
12	9	OAK
13	11	OAK
14	8	OAK
15	12	OAK
16	15	OAK
17	12	PINE
~~18~~	~~18~~	~~MAPLE~~
19	9	SWEETGUM
20	8	SWEETGUM
21	5	SWEETGUM
22	7	BOXELDER
23	10	SWEETGUM
24	8	PINE
25	13	PINE
26	5	MAPLE
27	5	SOURWOOD
28	5	MAPLE
29	10	MAPLE
30	7	MAPLE

TREE ID	SIZE (INCHES)	TYPE
31	10	MAPLE
32	8	PINE
33	18	POPLAR
34	10	SWEETGUM
35	6	PINE
36	10	SWEETGUM
37	10	SWEETGUM
38	10	POPLAR
39	10	POPLAR
40	10	POPLAR
41	10	POPLAR
42	4	MAPLE
43	9	POPLAR
44	9	POPLAR
45	4	SWEETGUM
46	19	POPLAR
47	15	SWEETGUM
48	25	SWEETGUM
49	20	POPLAR
50	10	MAPLE
51	42	SWEETGUM
52	5	HICKORY
53	5	HICKORY
54	10	HICKORY
55	38	SWEETGUM
56	19	SWEETGUM
57	25	SWEETGUM
58	5	POPLAR
59	20	SWEETGUM
60	10	SWEETGUM

TREE ID	SIZE (INCHES)	TYPE
61	10	SWEETGUM
62	10	SWEETGUM
63	10	SWEETGUM
64	20	SWEETGUM
65	25	SWEETGUM
66	8	OAK
67	4	POPLAR
68	4	POPLAR
69	32	PINE
70	38	SWEETGUM
71	25	OAK
72	12	OAK
73	12	OAK
74	12	OAK
75	12	OAK
76	12	OAK
77	29	PINE
78	20	PINE
79	21	PINE
80	12	MAPLE
81	5	POPLAR
82	12	MAPLE
83	5	POPLAR
84	10	PINE
~~85~~	~~25~~	~~MAPLE~~
~~86~~	~~26~~	~~MAPLE~~
~~87~~	~~26~~	~~MAPLE~~
~~88~~	~~18~~	~~MAPLE~~
89	13	PINE
90	9	PINE

TREE ID	SIZE (INCHES)	TYPE
91	9	PINE
92	8	PINE
93	7	PINE
94	7	PINE
95	7	PINE
96	8	PINE
97	7	PINE
98	8	PINE
99	8	PINE
100	7	PINE
101	8	PINE
102	12	PINE
103	14	PINE
~~104~~	~~12~~	~~MAPLE~~
~~105~~	~~14~~	~~MAPLE~~
~~106~~	~~14~~	~~MAPLE~~
~~107~~	~~14~~	~~MAPLE~~
~~108~~	~~14~~	~~MAPLE~~

***BOUNDARY TREES ARE SHADED**

TREE CALCULATIONS
130 INCHES/ACRE x 4.9 ACRES = 637 REQUIRE INCHES
541 INCHES PRESERVED
637 – 541 = 96 INCHES REQUIRED

LEGEND

ABBREVIATIONS

APPROX	= APPROXIMATE	HP	= HIGH POINT	UGTM	= UG TELEPHONE MARKER
BC	= BACK OF CURB	INV	= INVERT	WM	= WATER METER
BFE	= BOTTOM FLOOR ELEVATION	IE	= INVERT ELEVATION	WV	= WATER VALVE
BM	= BENCHMARK	IPF	= IRON PIN FOUND	YI	= YARD INLET
BW	= BOTTOM OF WALL	IPS	= IRON PIN SET – 1/2" REBAR		
BLDG	= BUILDING	ICV	= IRRIGATION CONTROL VALVE		
B/L	= BUILDING LINE	JB	= JUNCTION BOX		
CB	= CATCH BASIN	LLL	= LAND LOT LINE		
C/L	= CENTERLINE	LP	= LIGHT POLE		
CO	= CLEANOUT	LOWP	= LOW POINT		
CONC	= CONCRETE	MH	= MANHOLE		
CMF	= CONCRETE MONUMENT FOUND	MSL	= MEAN SEA LEVEL		
CMP	= CORRUGATED METAL PIPE	OTP	= OPEN TOP PIPE		
CSP	= CORRUGATED STEEL PIPE	OCS	= OUTLET CONTROL STRUCTURE		
CF	= CUBIC FEET	PVMT	= PAVEMENT		
C&G	= CURB & GUTTER	PED	= PEDESTAL		
CTF	= CRIMP TOP FOUND	PKF	= PK NAIL FOUND		
DIA	= DIAMETER	PCP	= POLYVINYL CHLORIDE PIPE		
DE	= DRAINAGE EASEMENT	POB	= POINT OF BEGINNING		
DI	= DROP INLET	PWR	= POWER		
DIP	= DUCTILE IRON PIPE	PP	= POWER POLE		
DWCB	= DOUBLE WING CATCH BASIN	PTP	= POWER/TELEPHONE POLE		
EP	= EDGE OF PAVEMENT	P/L	= PROPERTY LINE		
ELEV	= ELEVATION	PROP	= PROPOSED		
EX	= EXISTING	RB	= REBAR		
FC	= FACE OF CURB	RCP	= REINFORCED CONCRETE PIPE		
FT	= FEET	R/W	= RIGHT-OF-WAY		
FFE	= FINISHED FLOOR ELEVATION	SSE	= SANITARY SEWER EASEMENT		
FH	= FIRE HYDRANT	SSMH	= SANITARY SEWER MANHOLE		
FES	= FLARED END SECTION	SWCB	= SINGLE WING CATCH BASIN		
FM	= FORCE MAIN	S/W	= SIDEWALK		
GPMH	= GEORGIA POWER MANHOLE	SF	= SQUARE FEET		
GI	= GRATE INLET	TEL	= TELEPHONE		
GR	= GROUND	TB	= TOP OF BANK		
GW	= GUY WIRE	TC	= TOP OF CURB		
HW	= HEADWALL	TPOB	= TRUE POINT OF BEGINNING		
HDPE	= HIGH DENSITY POLYETHYLENE	TW	= TOP OF WALL		
		TRANS	= TRANSFORMER		
		UG	= UNDERGROUND		

LINETYPES

= BRANCH/CREEK
= FENCE
= GAS LINE
= LAND LOT LINE
= PLUGGED PIPE/STUB
= POWER LINE
= SANITARY SEWER LINE
= STORM DRAINAGE LINE
= TELEPHONE LINE
= TRAVERSE LINE/POINT
= WATER LINE

SYMBOLS

= PROPERTY CORNER
= SIGN
= SSMH
= STUB
= HYDRANT
= WATER METER
= WATER VALVE
= LIGHT POST
= UTILITY POLE

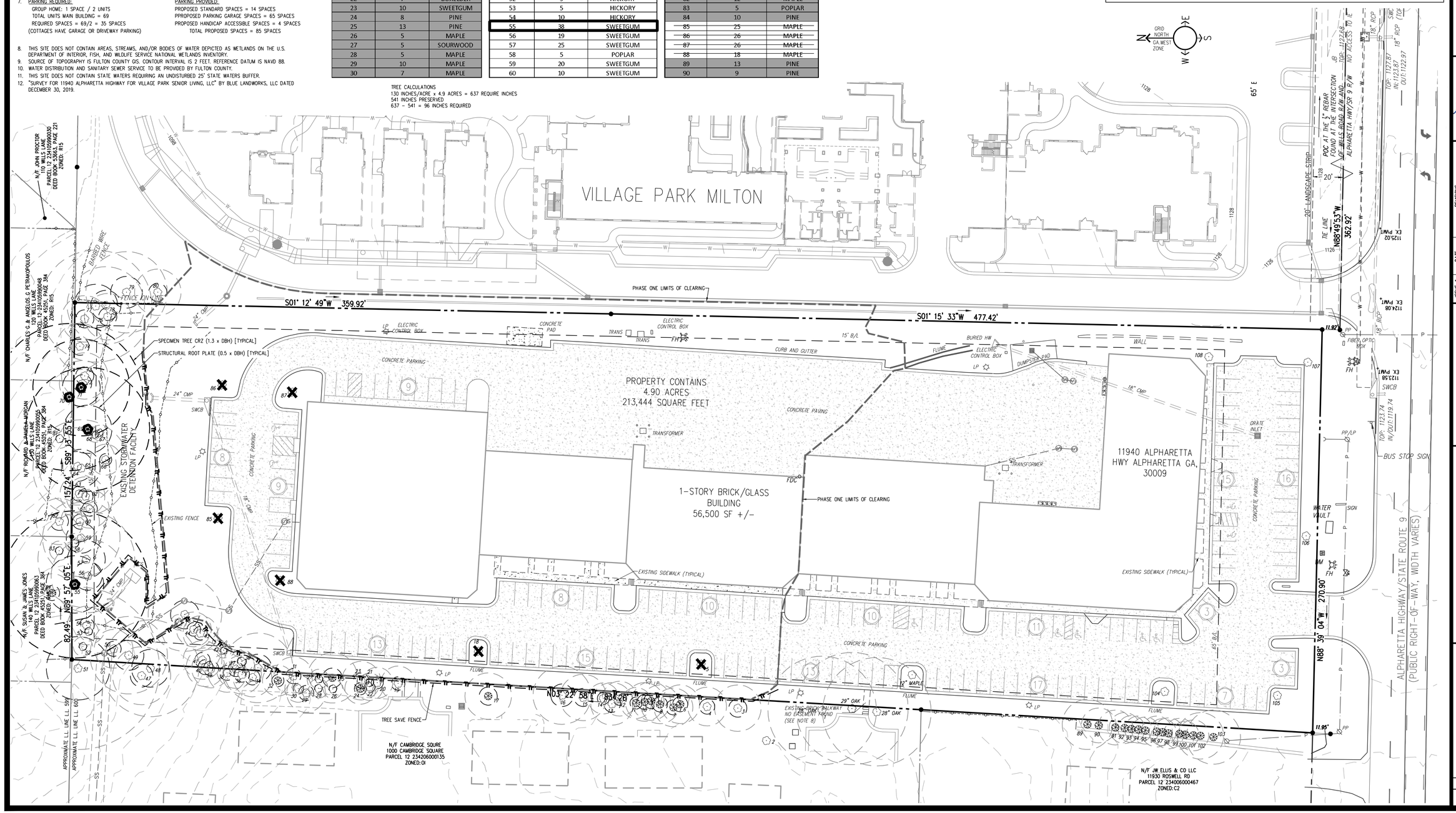

BLUE LANDWORKS
CONSULTING ENGINEERS & SURVEYORS
LICENSE # PEF005518
LICENSE # LSF001044
5019 WEST BROAD STREET
SUITE M230
SUGAR HILL, GEORGIA 30518
TELEPHONE: (678) 804-8586
INFO@BLUELANDWORKS.COM
WWW.BLUELANDWORKS.COM

PREPARED FOR:
VILLAGE PARK SENIOR LIVING, LLC
3424 PEACHTREE RD SUITE 1780
ATLANTA, GA 30326
PHONE: 678 677-8900
CONTACT: BRYAN HENDERSON
EMAIL: bryan@galerieliving.com

GEORGIA REGISTERED No. 3403 PROFESSIONAL ENGINEER GRANT H. CROWE

ISSUE #	DATE	REVISIONS
1	10/12/2021	SUBMIT FOR REVIEW

SCALE: 1" = 30'
0 30 60 90 feet

VILLAGE PARK MILTON
PHASE TWO
11940 ALPHARETTA HIGHWAY

PARCEL(S) 12-2340060000566
CITY OF ALPHARETTA
LAND LOT 600, 1ST DISTRICT
FULTON COUNTY, GA
DRAWN: CC
CHECKED: JN

TREE SURVEY

PROJECT# 2019.099
TR-001

X:\2019-099 – 11940 Alpharetta Hwy\000 – AutoCAD\30 – Construction\2019.099 IP Milton_TREE SURVEY.dwg, TR-001 10/12/2021 8:49 AM by Grant Crowe

TREE PROTECTION, GRADING EROSION CONTROL, AND DEMOLITION NOTES:

1. IF THERE ARE INCONSISTENCIES BETWEEN ANY ITEMS ON THESE PLANS THE MORE STRICT INTERPRETATION OF THOSE REQUIREMENTS SHALL BE FOLLOWED. PLEASE CONTACT THE CITY ARBORIST FOR ANY INTERPRETATION.
2. PRIOR TO THE TREE SAVE FENCE INSPECTION PROVIDE THE CITY ARBORIST WITH PROOF OF PRE-PAYMENT OF THE REQUIRED TREE CARE PLAN TO A REPUTABLE TREE CARE COMPANY.
3. TREE SAVE FENCE AND SIGNAGE FOR ENTIRE SITE MUST BE INSTALLED, INSPECTED AND APPROVED PRIOR TO INSTALLATION OF EROSION CONTROL MEASURES. NO LAND DISTURBANCE OR DEMOLITION IS ALLOWED BEFORE THIS INSPECTION AND APPROVAL HAS OCCURRED.
4. THE CRZ OF SPECIMEN TREES PLUS ALL BUFFERS SHALL BE PROTECTED WITH WIRE-BACK TREE SAVE FENCING WITH METAL SUPPORT POSTS OR CHAIN LINK AND TREE SAVE SIGNAGE.
5. INSTALLATION OF THE TREE SAVE FENCE WILL INVOLVE NO TRENCHING.
6. ALL EXISTING TREES IDENTIFIED FOR PRESERVATION OR FOUND WITHIN TREE SAVE AREAS MUST BE FULLY PROTECTED DURING ALL PHASES OF THIS PROJECT.
7. ADDITIONAL TREES ALONG THE LIMITS OF DISTURBANCE WITH ENCROACHMENT INTO THE SRP AND DEEMED STRUCTURALLY UNSAFE BY THE CITY ARBORIST OR THE PROJECT ARBORIST MAY BE REQUIRED TO BE REMOVED PRIOR TO CO.
8. ALL ROOTS ENCOUNTERED 1/2" OR GREATER DURING GRADING OR EXCAVATING OPERATIONS
9. SHALL BE CLEAN CUT UNDER THE DIRECTION OF AN ISA CERTIFIED ARBORIST.
10. ANY LIMBS OVERHANGING THE LOD THAT MAY BE RIPPED, TORN, OR DAMAGED DURING CONSTRUCTION SHALL BE PROPERLY PRUNED UNDER THE DIRECTION OF AN ISA CERTIFIED ARBORIST.
11. IT IS THE OWNER'S RESPONSIBILITY TO MAINTAIN THE VEGETATION AND REMOVE TRASH AND DEBRIS AROUND THE PERIMETER OF THE PROJECT, EVEN IF WITHIN THE PUBLIC ROW, IN ACCORDANCE WITH THE CITY OF ALPHARETTA PROPERTY MAINTENANCE CODES.
12. ALL APPROVED REVISIONS TO THE LOCATION OF THE TREE SAVE FENCE NEED TO BE COORDINATED WITH THE LAND DISTURBANCE INSPECTOR PRIOR TO RELOCATION

LANDSCAPE PLAN AND UTILITY PLAN:

1. ALL TREES MUST BE PLANTED OUTSIDE OF ANY UTILITY EASEMENTS, UNLESS APPROVED BY THE CITY ARBORIST OR UTILITY PROVIDER.

LANDSCAPE PLAN AND NOTES:

1. THE CITY ARBORIST MUST INSPECT THE SITE BEFORE INSTALLATION OF EROSION CONTROL MEASURES. LAND DISTURBANCE WITHOUT A SITE INSPECTION AND APPROVAL BY THE CITY ARBORIST WILL RESULT IN A "STOP-WORK ORDER" AND FINES.
2. IF TREE SURVEY INACCURACIES ARE FOUND ON-SITE, A STOP WORK ORDER WILL BE ISSUED UNTIL REVISED PLANS ARE APPROVED AND PROCESSED BASED ON ACCURATE INFORMATION.
3. DESIGN LANDSCAPE ARCHITECT OR PROJECT ARBORIST WILL INSPECT, VERIFY, AND APPROVE THE LANDSCAPE HAS BEEN PLANTED PER THE APPROVED PLANS AND CITY STANDARDS PRIOR TO CONTACTING THE CITY ARBORIST FOR A CO INSPECTION.
4. TREES AGREED UPON TO BE SAVED ARE THE RESPONSIBILITY OF THE OWNER.
5. A 4" LAYER OF MULCH IS REQUIRED FOR THE CRZ OF SPECIMEN TREES, TREES OF QUALITY, AND TREE GROUPINGS. MULCH MUST BE APPLIED PRIOR TO START OF CONSTRUCTION AND SHALL NOT TOUCH THE TRUNKS OF THE TREE(S).
6. A MINIMUM 2" LAYER OF MULCH IS REQUIRED FOR ALL EXISTING, NON-SPECIMEN, LANDSCAPE TREES, INCLUDING STREET AND PARKING LOT TREES. MULCH MUST BE APPLIED PRIOR TO START OF CONSTRUCTION AND SHALL NOT TOUCH THE TRUNKS OF THE TREE(S).
7. ALL MULCH MUST BE ORGANIC MULCH CONSISTING OF WOOD CHIPS, SHREDDED BARK, PINE NEEDLES, OR SIMILAR. SYNTHETIC MULCH OR ROCKS ARE NOT APPROVED FOR USE IN THE CITY OF ALPHARETTA.
8. NEWLY PLANTED TREES SHALL HAVE VISIBLE ROOT FLARES AT FINISHED GRADE. NO CIRCLING ROOTS SHALL BE ALLOWED ON PLANTED TREES. THE UPPER TWO RINGS OF THE WIRE BASKET, ALL BURLAP, AND STRAPPING MUST BE CUT AND REMOVED PRIOR TO BACKFILL.
9. PLANT SIZES (CALIPER AND HEIGHT) MUST MATCH THE SIZES SHOWN ON THE PLANS. PLANTS THAT DO NOT MEET THESE MINIMUMS WILL NOT BE ACCEPTED. E.G. 3 INCH CALIPER TREES MUST BE 3 INCHES OR LARGER. PLANT HEIGHT MEASUREMENT IS TAKEN AT THE TOP OF THE MAIN BODY OF THE PLANT AND NOT AT THE TIP OF THE TOPMOST GROWTH.
10. ALL NEWLY PLANTED TREES SHALL BE EQUIVALENT IN QUALITY TO A FLORIDA #1 GRADE OR BETTER. ALL TREES OF LESSER QUALITY SHALL BE REJECTED BY THE CITY ARBORIST.
11. WATERING BAGS OR A DRIP IRRIGATION SYSTEM MUST BE PROVIDED FOR ALL TREES IMMEDIATELY AFTER PLANTING AND REMAIN THROUGH ESTABLISHMENT.
12. WHEN WATERING BAGS ARE USED MANUFACTURERS RECOMMENDATIONS MUST BE FOLLOWED FOR PROPER SIZING AND WATERING SCHEDULES. BAGS WILL BE FILLED WEEKLY BY OWNER AND DURING DROUGHTS FOR A MINIMUM OF 18 MONTHS AFTER INSTALLATION.
13. NO TRENCHING ALLOWED IN TREE SAVE AREAS - INCLUDING IRRIGATION.
14. TREE PIT DRAINAGE TESTING IS REQUIRED WHEN TREES ARE PLANTED IN PARKING LOT ISLANDS, SIDEWALK TREE PITS, ROADWAY MEDIANS, OR SIMILAR LOCATIONS. PLEASE REFER TO CITY DETAILS REGARDING PLANTING PIT OR LANDSCAPE ISLAND CONSTRUCTION. FILL EACH PIT WITH WATER. IF PERCOLATION IS LESS THAN 100% WITHIN A 12 HOUR PERIOD, USE AN AUGER TO DRILL A 10" INCH HOLE TO A DEPTH OF FOUR FEET BELOW THE BOTTOM OF THE PIT. FILL HOLE WITH DRAINAGE GRAVEL AND COVER WITH A SOIL SEPARATOR. RETEST PIT. IF DRAINAGE IS STILL UNSATISFACTORY, CITY ARBORIST AND PROJECT ARBORIST MUST BE NOTIFIED IN WRITING OF THE LOCATIONS WITH POOR DRAINAGE TO PROVIDE A SOLUTION BEFORE PLANTING. TESTING RESULTS MUST BE PROVIDED TO THE CITY ARBORIST.
15. ALL BUFFERS SHALL BE PLANTED WHERE SPARSE AND CODE REQUIRED SCREENING SHALL BE INSTALLED IN ORDER TO CREATE A YEAR ROUND OPAQUE SCREEN WITHIN 2 YEARS OF CONSTRUCTION OR AS DIRECTED BY THE CITY OF ALPHARETTA. DURING CONSTRUCTION OR AT THE TIME OF CO THE CITY MAY REQUIRE ADDITIONAL PLANTINGS TO MEET THESE REQUIREMENTS ABOVE WHAT IS SHOWN ON THE APPROVED LANDSCAPE PLAN.
16. ALL TREE ANCHORING DEVICES SHALL BE REMOVED FROM TREE AFTER ONE COMPLETE GROWING SEASON OR ONE YEAR AFTER PLANTING, WHICHEVER IS GREATER.
17. PROPERTY OWNER SHALL BE RESPONSIBLE FOR THE CARE AND MAINTENANCE OF THE TREES AND LANDSCAPING THAT FRONT THEIR PROPERTY WITHIN THE ROW.
18. LANDSCAPE CONTRACTORS ARE REQUIRED TO ATTEND THE CITY OF ALPHARETTA PRE-CONSTRUCTION CLASS PRIOR TO BEGINNING WORK ON ANY PROJECT. PLEASE CALL (678)297-6070 FOR INFORMATION AND TO RESERVE A SPOT.
19. NO TREES SHALL BE PLANTED ON ANY AREA OF AN EARTHEN DAM OR EMBANKMENT. MAKE SURE THIS NOTE IS BOLD AND LOCATED IN A PROMINENT PLACE NEAR THE DAM.

IRON WOOD DG
IRONWOOD DESIGNGROUP
IRONWOODDG.COM
Landscape Architecture | Project Management
Planning | LEED Consulting | Urban Design

VILLAGE PARK MILTON-II

11940 ALPHARETTA HIGHWAY
ALPHARETTA, GEORGIA

Project Number: 2021-042

Stamp

No.	Drawing Release	Date
01	TRP	10/08/21

Sheet Title

TREE PROTECTION PLAN NOTES

Sheet Number

L-10.0

Not for Construction

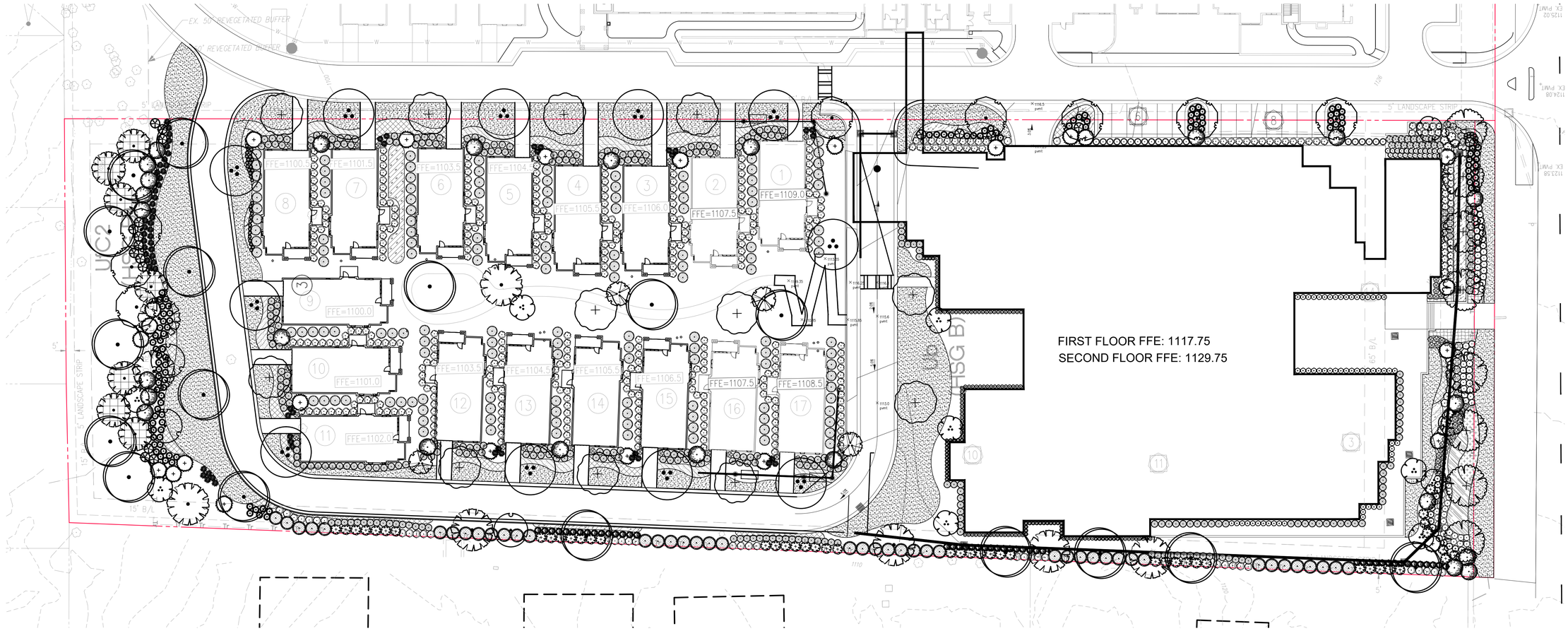

SITE DENSITY REQUIREMENT:

(EDF) EXISTING DENSITY FACTOR= 523 INCHES
640.9SDF - 523 EDF= 117.9 INCHES REQUIRED
RDF= 117.9 INCHES

(RDF) REPLACEMENT DENSITY FACTOR:
(8) 4" CALIPER TREES PLANTED, 8 x 4" = 32"
(159) 3" CALIPER TREES PLANTED, 159 x 3" = 477"
32"+477"=509"

509" > 117.9" RDF

SITE DENSITY MET

PLANT SCHEDULE

SHRUBS	CODE	BOTANICAL / COMMON NAME	SIZE	DIMENSIONS	NOTES	QTY
	BW2	BUXUS MICROPHYLLA KOREANA `WINTERGREEN` / KOREAN BOXWOOD	36"X36"	GLOBE	FULL AND HEALTHY	23
	BW7	BUXUS MICROPHYLLA KOREANA `WINTERGREEN` / KOREAN BOXWOOD	7 GAL	18" MINIMUM HEIGHT	PLANT AND PRUNE INTO CLIPPED HEDGE.	102
	CP	CAMELLIA JAPONICA `DEBUTANTE` / DEBUTANTE CAMELLIA	7 GAL	48" MINIMUM HEIGHT	FULL AND HEALTHY	159
	CG	CAMELLIA SASANQUA `SHISHI GASHIRA` / SHISHI GASHIRA CAMELLIA	7 GAL	18" MINIMUM HEIGHT	FULL AND HEALTHY	80
	CI	CORTADERIA SELLOANA 'ICALMA' / ICALMA DWARF PAMPAS GRASS	3 GAL	4` MINIMUM HEIGHT	FULL AND HEALTHY	25
	HT7	HYDRANGEA MACROPHYLLA TWIST-N-SHOUT / ENDLESS SUMMER TWIST-N-SHOUT HYDRANEGA	7 GAL	24" MINIMUM HEIGHT	FULL AND HEALTHY	23
	HL2	HYDRANGEA PANICULATA `LIMELIGHT` TM / LIMELIGHT HYDRANGEA	3 GAL	24" MINIMUM HEIGHT	FULL AND HEALTHY	38
	HL3	HYDRANGEA PANICULATA `LITTLE LIME` / LITTLE LIME HYDRANGEA	3 GAL	18" MINIMUM HEIGHT	FULL AND HEALTHY	58
	IB7	ILEX CORNUTA `BURFORDII NANA` / DWARF BURFORD HOLLY	7 GAL	24" MINIMUM HEIGHT	FULL AND HEALTHY	325
	IJ	ILEX CRENATA 'STEEDS' / STEEDS JAPANESE HOLLY	3 GAL			34
	KL7	KALMIA LATIFOLIA / MOUNTAIN LAUREL	7 GAL	24" MINIMUM HEIGHT	FULL AND HEALTHY	5
	LC3	LOROPETALUM CHINENSE RUBRUM `RUBY` / RUBY FRINGE FLOWER	3 GAL	18" MINIMUM HEIGHT	FULL AND HEALTHY	46
	MS3	MISCANTHUS SINENSIS `MORNING LIGHT` / MORNING LIGHT MISCANTHUS GRASS	3 GAL	18" MINIMUM HEIGHT	FULL AND HEALTHY	70
	MC4	MUHLENBERGIA CAPILLARIS / PINK MUHLY GRASS	3 GAL	18" MINIMUM HEIGHT	FULL AND HEALTHY	110
	MC2	MYRICA CERIFERA / WAX MYRTLE	3 GAL	3` MINIMUM HEIGHT	FULL AND HEALTHY	50
	OF15	OSMANTHUS FRAGRANS / SWEET OLIVE	15 GAL	60" MINIMUM HEIGHT	FULL AND HEALTHY	44
	PG	PICEA PUNGENS GLAUCA `GLOBOSA NANA` / DWARF GLOBE BLUE SPRUCE	3 GAL	18" MINIMUM HEIGHT	FULL AND HEALTHY	18
	PO7	PRUNUS LAUROCERASUS `OTTO LUYKEN` / LUYKENS LAUREL	7 GAL	24" MINIMUM HEIGHT	FULL AND HEALTHY	429
	RD	RHODODENDRON X `CONLED` TM / AUTUMN CORAL ENCORE AZALEA	3 GAL	12" MINIMUM HEIGHT	FULL AND HEALTHY	88
	RM	RHODODENDRON X `ROBLEV` TM / AUTUMN IVORY ENCORE AZALEA	7 GAL	30" MINIMUM HEIGHT		35
	R3	ROSA X `RADTKOPINK` P.P.#18507 / PINK DOUBLE KNOCK OUT ROSE	3 GAL	18" MINIMUM HEIGHT	FULL AND HEALTHY	7
	TG7	TERNSTROEMIA GYMNANTHERA / CLEYERA	7 GAL	24" MINIMUM HEIGHT	FULL AND HEALTHY	9
	TL	THUJA OCCIDENTALIS 'LITTLE GIANT' / LITTLE GIANT ARBORVITAE	3 GAL	3` MINIMUM HEIGHT		16

PLANT SCHEDULE

TREES	CODE	BOTANICAL / COMMON NAME	CAL	SIZE	SIZE	FORM	NOTES	QTY
	AG	ACER RUBRUM `OCTOBER GLORY` TM / OCTOBER GLORY MAPLE	B & B	3"CAL	MINIMUM 16` HGT.		FULL AND HEALTHY	12
	AS2	ACER SACCHARUM `LEGACY` / SUGAR MAPLE `LEGACY`	B & B	4"CAL	MINIMUM 18` HGT.	CENTRAL LEADER	FULL AND HEALTHY	8
	CF4	CERCIS CANADENSIS `FOREST PANSY` TM / FOREST PANSY REDBUD	B & B	3"CAL	MINIMUM 8` HGT.	CENTRAL LEADER	FULL AND HEALTHY	7
	CR	CORNUS FLORIDA RUBRA / PINK FLOWERING DOGWOOD	B & B	3"CAL	MINIMUM 10` HGT.		FULL AND HEALTHY	11
	IN	ILEX `NELLIE R. STEVENS` / NELLIE R. STEVENS HOLLY	15 GAL	3"CAL	MINIMUM 8` HGT.	FULL TO THE GROUND	FULL AND HEALTHY	28
	MB	MAGNOLIA GRANDIFLORA `BRACKENS BROWN BEAUTY` / BRACKEN'S SOUTHERN MAGNOLIA	B & B	3"CAL	MINIMUM 13` HGT.	FULL TO THE GROUND	FULL AND HEALTHY	7
	ML2	MAGNOLIA GRANDIFLORA `LITTLE GEM` / DWARF SOUTHERN MAGNOLIA	B & B	3"CAL	12` - 14` HGT.		FULL AND HEALTHY	25
	NS	NYSSA SYLVATICA / TUPELO	B & B	3"CAL	MINIMUM 12` HGT.		FULL AND HEALTHY	3
	QF	QUERCUS FALCATA / SOUTHERN RED OAK	B & B	3"CAL	12` - 14` HGT.	CENTRAL LEADER	FULL AND HEALTHY	8
	QL	QUERCUS LYRATA / OVERCUP OAK	B & B	3"CAL	12` - 14` HGT.	CENTRAL LEADER	FULL AND HEALTHY	8
	QE	QUERCUS PHELLOS 'QPSTA' TM / HIGHTOWER WILLOW OAK	B & B	3"CAL	12` - 14` HGT.		FULL AND HEALTHY	17
	TO	THUJA OCCIDENTALIS / EMERALD GREEN ARBORVITAE	B & B	3"CAL	MINIMUM 10` HGT.	FULL TO THE GROUND	FULL AND HEALTHY	18
	UJ	ULMUS AMERICANA 'JEFFERSON' / JEFFERSON AMERICAN ELM	B & B	3"CAL	12` - 14` HGT.		FULL AND HEALTHY	12
	UB	ULMUS PARVIFOLIA `BOSQUE` / BOSQUE ELM	B & B	3"CAL	MINIMUM 13` HGT.	CENTRAL LEADER	FULL AND HEALTHY	3

IF YOU DIG GEORGIA...
CALL US FIRST!
CALL—811
(770) 623-4332
UTILITIES PROTECTION CENTER
IT'S THE LAW

NORTH

0 30 60 90 120 feet
1" = 30'

IRONWOOD DESIGNGROUP
IRONWOODDG.COM
Landscape Architecture | Project Management
Planning | LEED Consulting | Urban Design

VILLAGE PARK MILTON-II

11940 ALPHARETTA HIGHWAY
ALPHARETTA, GEORGIA

Project Number: 2021-042

Stamp

No.	Drawing Release	Date
01	TRP	10/08/21

Sheet Title

TREE REPLACEMENT PLAN

Sheet Number

L-10.1

Not for Construction

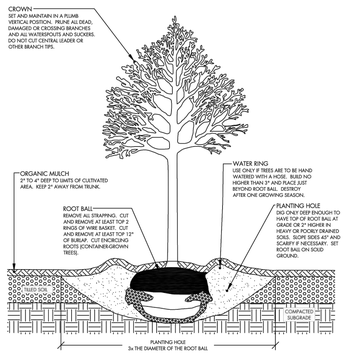

①

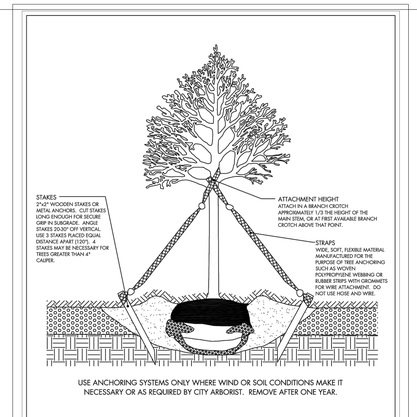

②

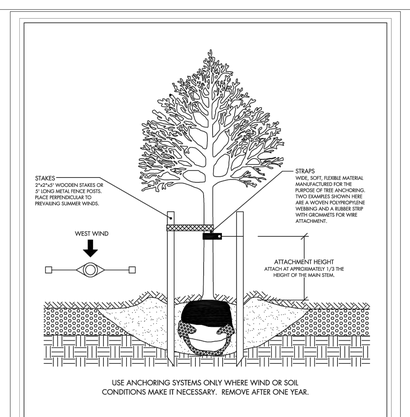

③

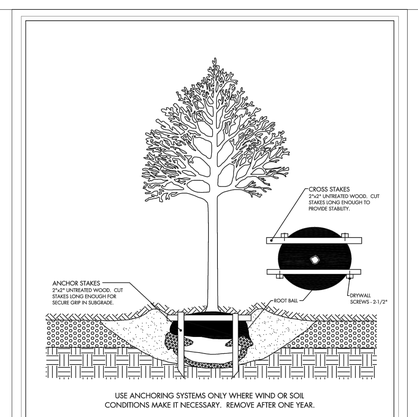

④

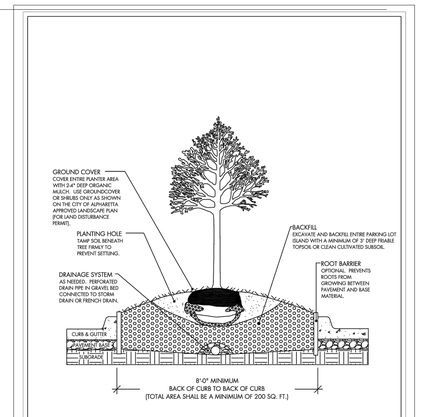

⑤

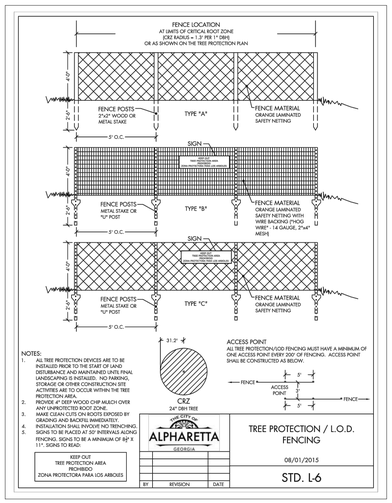

⑥

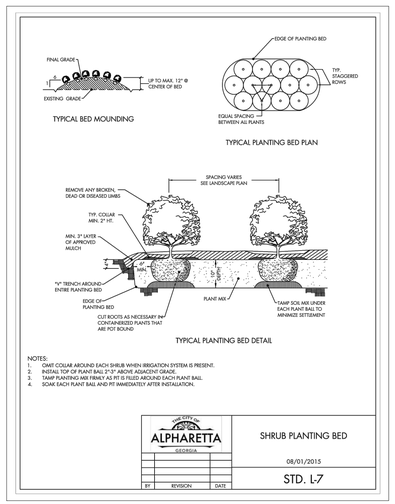

⑦

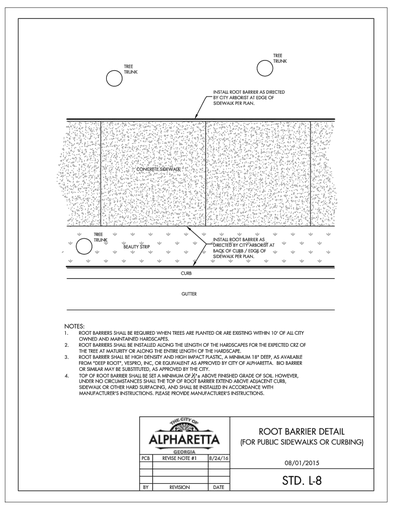

⑧

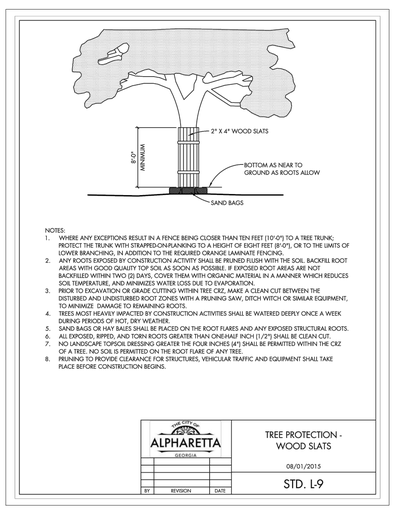

⑨

IRON WOOD DG

IRONWOOD DESIGNGROUP
IRONWOODDG.COM
Landscape Architecture | Project Management
Planning | LEED Consulting | Urban Design

VILLAGE PARK MILTON-II

11940 ALPHARETTA HIGHWAY
ALPHARETTA, GEORGIA

Project Number: 2021-042

Stamp

GEORGIA REGISTERED No. 001914 PROFESSIONAL LANDSCAPE ARCHITECT SAMUEL T. SAMPSON

No.	Drawing Release	Date
01	TRP	10/08/21

Sheet Title

ARBORIST REPORT

Sheet Number

L-10.2

Not for Construction

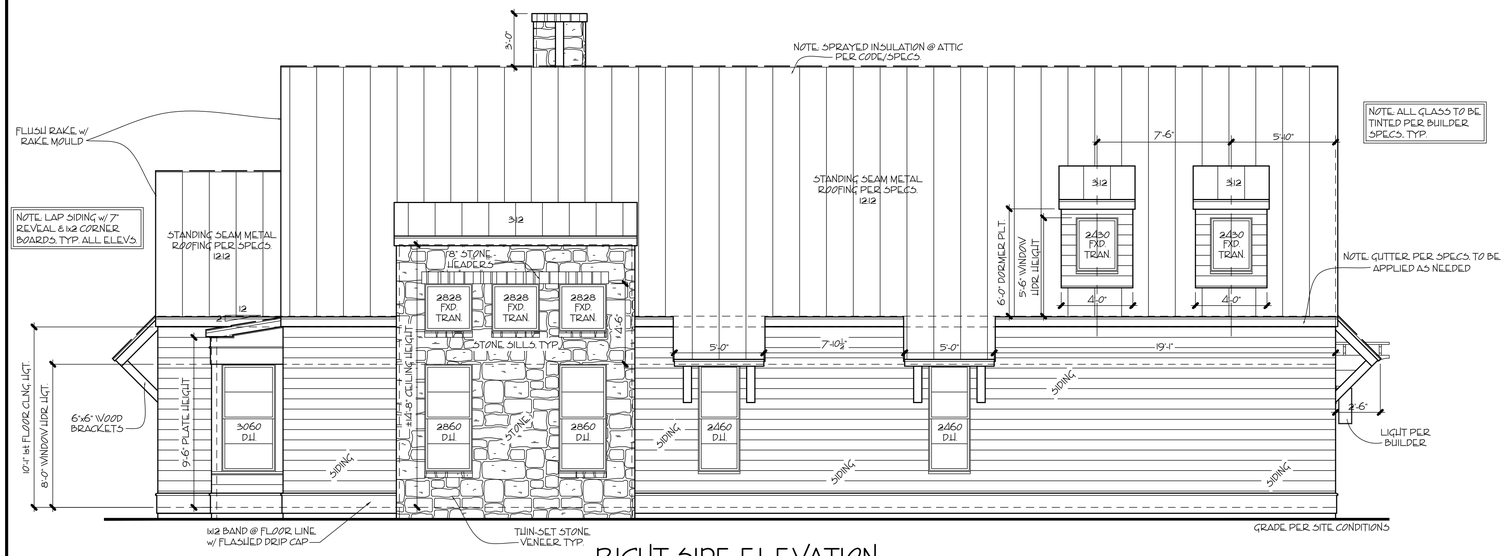

RIGHT SIDE ELEVATION

SCALE: 1/4" = 1'-0"

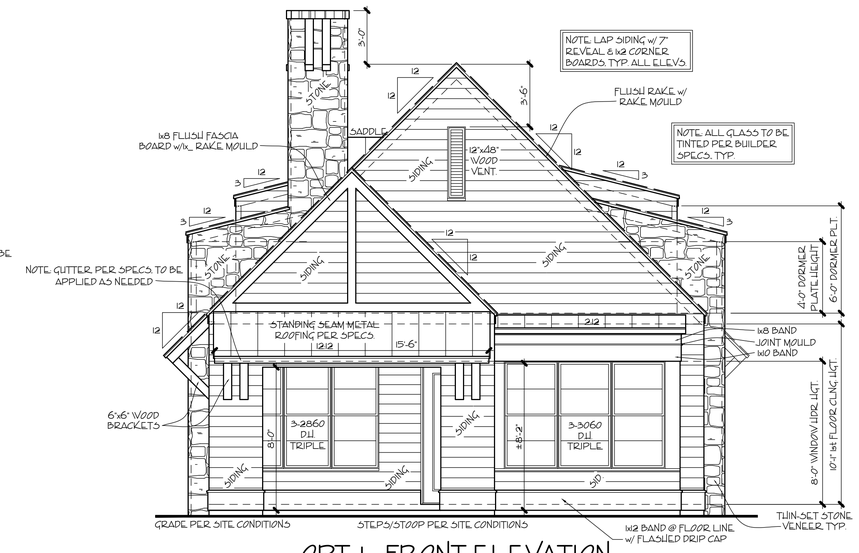

OPT. 1 - FRONT ELEVATION

SCALE: 1/4" = 1'-0"

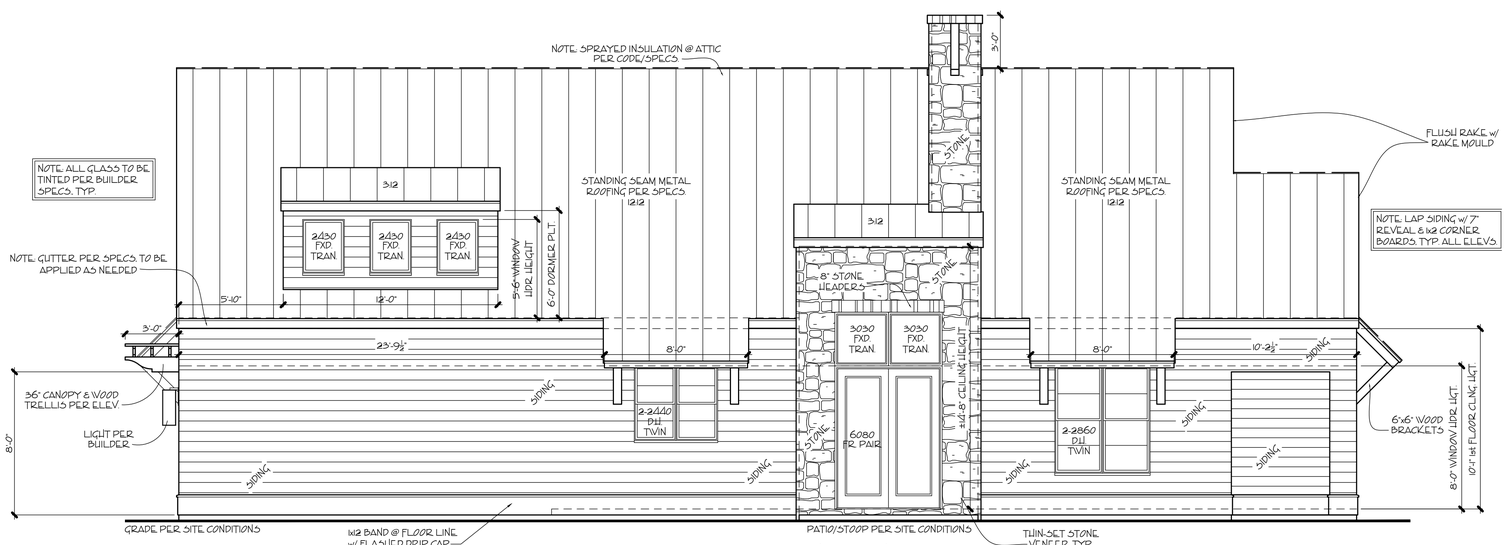

LEFT SIDE ELEVATION

SCALE: 1/4" = 1'-0"

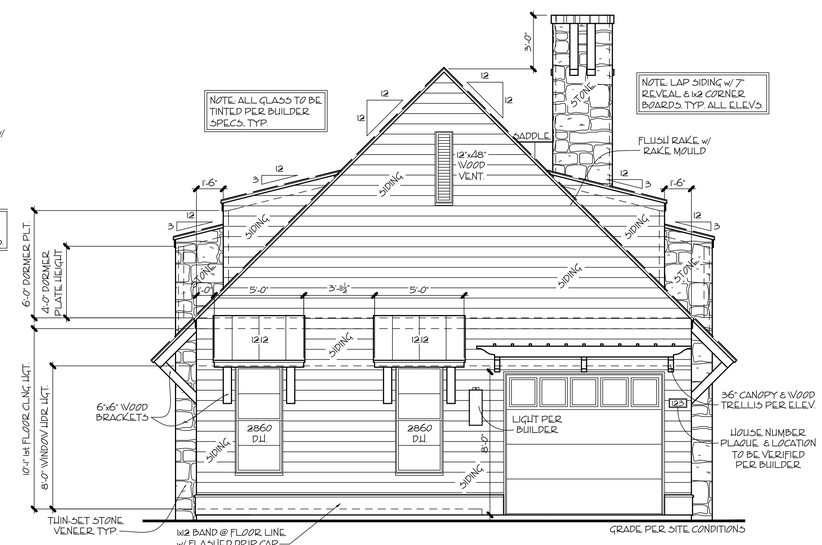

REAR ELEVATION

SCALE: 1/4" = 1'-0"

GENERAL NOTES

1. ALL WORK SHALL BE PERFORMED IN ACCORDANCE WITH ALL NATIONAL AND LOCAL CODES, REGULATIONS, AND LATEST CABO INTERNATIONAL BUILDING CODE WITH CURRENT ADDENDUM.
2. CONTRACTOR SHALL VERIFY ALL CONDITIONS AND DIMENSIONS AT THE SITE BEFORE BEGINNING CONSTRUCTION. ANY DISCREPANCIES SHALL BE REPORTED TO J. WALKER/ONEZERONE RESIDENTIAL DESIGNS LLC. FOR JUSTIFICATION/CORRECTION BEFORE PROCEEDING WITH THE WORK. CONTRACTOR SHALL ASSUME RESPONSIBILITY FOR ERRORS THAT ARE NOT REPORTED.
3. ALL DIMENSIONS SHALL BE READ OR CALCULATED AND NEVER SCALED.
4. ALL PORTIONS OF FOOTINGS ARE TO BE BELOW LOCAL FROST LINES AND MUST REST ON UNDISTURBED SOIL WITH ADEQUATE BEARING CAPACITY TO SUPPORT THE STRUCTURE. A LOCAL ENGINEER MUST BE CONSULTED FOR PROPER FOOTING AND REINFORCEMENT SIZES.
5. CONTRACTOR TO ENSURE COMPARABILITY OF THE BUILDING WITH ALL SITE REQUIREMENTS.
6. REINFORCE FOUNDATION WALLS PER LOCAL CODES.
7. ALL FOUNDATION AND STRUCTURAL MEMBERS SHALL BE DESIGNED AND STAMPED BY AN ENGINEER. THE CONTRACTOR IS RESPONSIBLE FOR THE ADJUSTMENT AND VERIFICATION OF ALL STRUCTURAL DETAILS AND CONDITIONS TO MEET ALL LOCAL CODES AND TO INSURE A WELL CONSTRUCTED AND SAFE STRUCTURE.
8. ALL WOOD, CONCRETE AND STEEL STRUCTURAL MEMBERS ARE TO MEET NATIONAL, STATE AND LOCAL BUILDING CODES.
9. ALL COLUMNS OR SOLID FRAMING SHALL BE DESIGNED TO CARRY AND TERMINATE LOADS THROUGH THE STRUCTURE TO FOUNDATION ELEMENTS THAT DISTRIBUTE THE LOADS TO FULL CAPACITY SOILS.
10. J. WALKER/ONEZERONE RESIDENTIAL DESIGNS LLC. ASSUMES NO LIABILITY FOR ANY HOME CONSTRUCTED FROM THIS PLAN.
11. THIS DESIGN LICENSE IS RELEASED FOR ONE (1) BUILT STRUCTURE ONLY AND NOT TRANSFERABLE TO ANOTHER INDIVIDUAL OR COMPANY.
12. ARCHITECTURAL DESIGN ASSUMES ENGINEERED FLOOR SYSTEM IS NOT TO EXCEED 14" IN DEPTH. ENGINEER SHALL RELATE FLOOR DEPTH TO STAIR DESIGN AND MODIFY ACCORDINGLY. NOTE: FLOOR SYSTEMS DEEPER THAN 14" IN DEPTH CAN ADVERSELY IMPACT FLOOR PLAN DESIGN.
13. THE DRAWINGS PREPARED BY J. WALKER/ ONEZERONE RESIDENTIAL DESIGN LLC ARE ARCHITECTURAL IN NATURE. STRUCTURAL DRAWINGS SHALL BE PREPARED BY A LOCAL ENGINEER PER LOCAL CODES.

Village Park of Alpharetta

BUNGALOW CTG. OPT. 1

ELEVATIONS

17-001

REV. NO.	REV. DATE/INT.
1	3-27-18

12-05-17

DRAWN BY:	SHEET NO.
JBW	E1-1

GENERAL NOTES

1. ALL WORK SHALL BE PERFORMED IN ACCORDANCE WITH ALL NATIONAL AND LOCAL CODES, REGULATIONS, AND LATEST CABO INTERNATIONAL BUILDING CODE WITH CURRENT ADDENDUM.

2. CONTRACTOR SHALL VERIFY ALL CONDITIONS AND DIMENSIONS AT THE SITE BEFORE BEGINNING CONSTRUCTION. ANY DISCREPANCIES SHALL BE REPORTED TO J. WALKER/ONEZERONINE, RESIDENTIAL DESIGNS LLC. FOR JUSTIFICATION/CORRECTION BEFORE PROCEEDING WITH THE WORK. CONTRACTOR SHALL ASSUME RESPONSIBILITY FOR ERRORS THAT ARE NOT REPORTED.

3. ALL DIMENSIONS SHALL BE READ OR CALCULATED AND NEVER SCALED.

4. ALL PORTIONS OF FOOTINGS ARE TO BE BELOW LOCAL FROST LINES AND MUST REST ON UNDISTURBED SOIL WITH ADEQUATE BEARING CAPACITY TO SUPPORT THE STRUCTURE. A LOCAL ENGINEER MUST BE CONSULTED FOR PROPER FOOTING AND REINFORCEMENT SIZES.

5. CONTRACTOR TO ENSURE COMPARABILITY OF THE BUILDING WITH ALL SITE REQUIREMENTS.

6. REINFORCE FOUNDATION WALLS PER LOCAL CODES.

7. ALL FOUNDATION AND STRUCTURAL MEMBERS SHALL BE DESIGNED AND STAMPED BY AN ENGINEER. THE CONTRACTOR IS RESPONSIBLE FOR THE ADJUSTMENT AND VERIFICATION OF ALL STRUCTURAL DETAILS AND CONDITIONS TO MEET ALL LOCAL CODES AND TO INSURE A WELL CONSTRUCTED AND SAFE STRUCTURE.

8. ALL WOOD, CONCRETE AND STEEL STRUCTURAL MEMBERS ARE TO MEET NATIONAL, STATE AND LOCAL BUILDING CODES.

9. ALL COLUMNS OR SOLID FRAMING SHALL BE DESIGNED TO CARRY AND TERMINATE LOADS THROUGH THE STRUCTURE TO FOUNDATION ELEMENTS THAT DISTRIBUTE THE LOADS TO FULL CAPACITY SOILS.

10. J. WALKER/ONEZERONINE RESIDENTIAL DESIGNS LLC. ASSUMES NO LIABILITY FOR ANY HOME CONSTRUCTED FROM THIS PLAN.

11. THIS DESIGN LICENSE IS RELEASED FOR ONE (1) BUILT STRUCTURE ONLY AND IS NOT TRANSFERABLE TO ANOTHER INDIVIDUAL OR COMPANY.

12. ARCHITECTURAL DESIGN ASSUMES ENGINEERED FLOOR SYSTEM IS NOT TO EXCEED 14" IN DEPTH. ENGINEER SHALL RELATE FLOOR DEPTH TO STAIR DESIGN AND MODIFY ACCORDINGLY. NOTE: FLOOR SYSTEMS DEEPER THAN 14" IN DEPTH CAN ADVERSELY IMPACT FLOOR PLAN DESIGN.

13. THE DRAWINGS PREPARED BY J. WALKER/ ONEZERONINE RESIDENTIAL DESIGN LLC. ARE ARCHITECTURAL IN NATURE. STRUCTURAL DRAWINGS SHALL BE PREPARED BY A LOCAL ENGINEER PER LOCAL CODES.

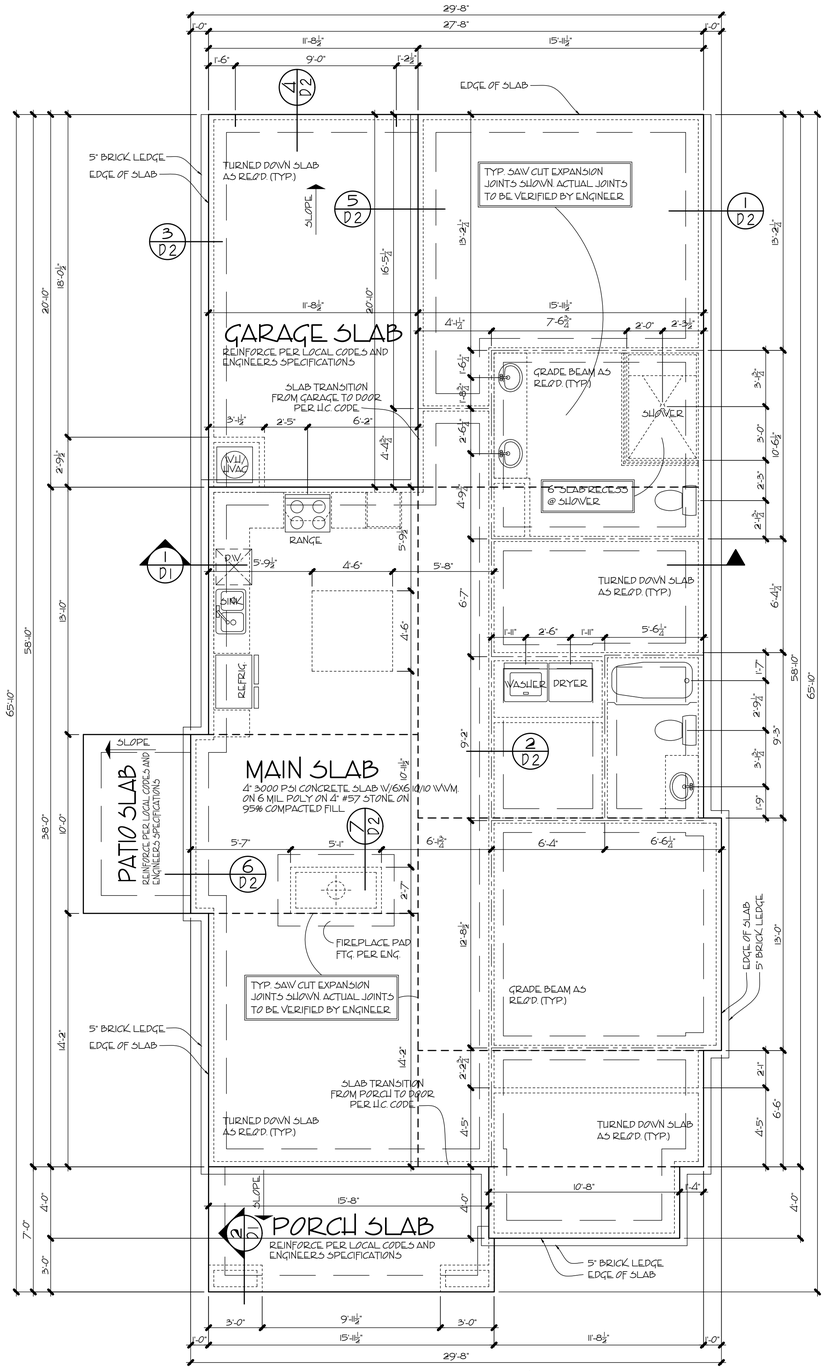

OPT. 1 - SLAB PLAN

SCALE: 1/4" = 1'-0"

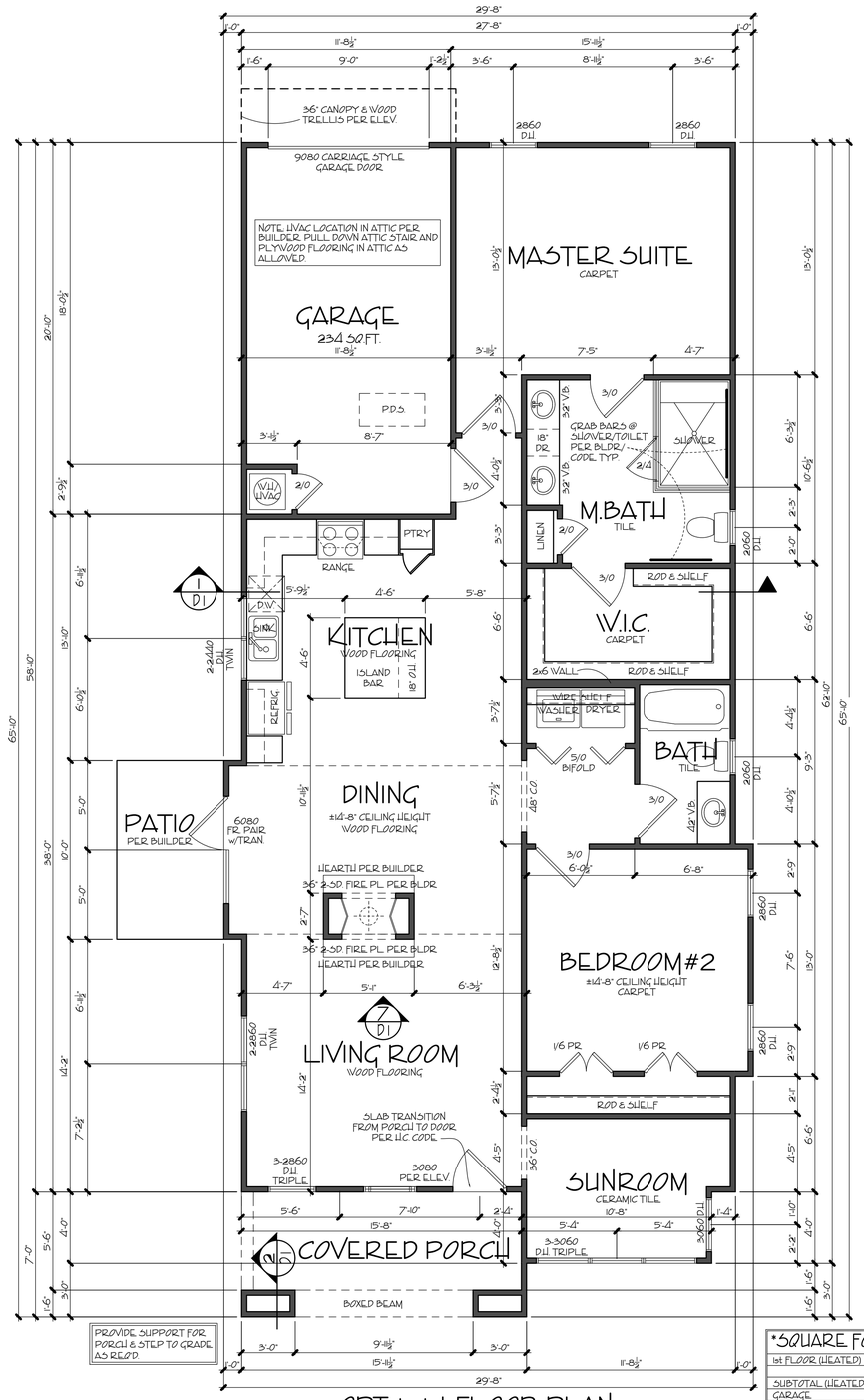

OPT. 1 - 1st FLOOR PLAN

SCALE: 1/4" = 1'-0"

*SQUARE FOOTAGES	
1st FLOOR (HEATED)	1,449 S.F.
SUBTOTAL (HEATED)	1,449 S.F.
GARAGE	244 S.F.
PORCH	111 S.F.
GROSS TOTAL	1,704 S.F.

*CALCULATED PER I.R.C. INDUSTRY STD. TO OUTSIDE FACE OF STUD. STAIRS & 2-STORY COUNTED ONCE.

Village Park of Alpharetta

BUNGALOW CTG. OPT. 1

1st FL. PLAN/SLAB PLAN

17-001

REV. NO	REV. DATE/INT.
1	3-27-18

12-05-17

DRAWN BY:	SHEET NO.
JBW	A1-1

GENERAL NOTES

1. ALL WORK SHALL BE PERFORMED IN ACCORDANCE WITH ALL NATIONAL AND LOCAL CODES, REGULATIONS, AND LATEST CABO INTERNATIONAL BUILDING CODE WITH CURRENT ADDENDUM.

2. CONTRACTOR SHALL VERIFY ALL CONDITIONS AND DIMENSIONS AT THE SITE BEFORE BEGINNING CONSTRUCTION. ANY DISCREPANCIES SHALL BE REPORTED TO J. WALKER/ONEZERONINE, RESIDENTIAL DESIGNS LLC. FOR JUSTIFICATION/CORRECTION BEFORE PROCEEDING WITH THE WORK. CONTRACTOR SHALL ASSUME RESPONSIBILITY FOR ERRORS THAT ARE NOT REPORTED.

3. ALL DIMENSIONS SHALL BE READ OR CALCULATED AND NEVER SCALED.

4. ALL PORTIONS OF FOOTINGS ARE TO BE BELOW LOCAL FROST LINES AND MUST REST ON UNDISTURBED SOIL WITH ADEQUATE BEARING CAPACITY TO SUPPORT THE STRUCTURE. A LOCAL ENGINEER MUST BE CONSULTED FOR PROPER FOOTING AND REINFORCEMENT SIZES.

5. CONTRACTOR TO ENSURE COMPARABILITY OF THE BUILDING WITH ALL SITE REQUIREMENTS.

6. REINFORCE FOUNDATION WALLS PER LOCAL CODES.

7. ALL FOUNDATION AND STRUCTURAL MEMBERS SHALL BE DESIGNED AND STAMPED BY AN ENGINEER. THE CONTRACTOR IS RESPONSIBLE FOR THE ADJUSTMENT AND VERIFICATION OF ALL STRUCTURAL DETAILS AND CONDITIONS TO MEET ALL LOCAL CODES AND TO INSURE A WELL CONSTRUCTED AND SAFE STRUCTURE.

8. ALL WOOD, CONCRETE AND STEEL STRUCTURAL MEMBERS ARE TO MEET NATIONAL, STATE AND LOCAL BUILDING CODES.

9. ALL COLUMNS OR SOLID FRAMING SHALL BE DESIGNED TO CARRY AND TERMINATE LOADS THROUGH THE STRUCTURE TO FOUNDATION ELEMENTS THAT DISTRIBUTE THE LOADS TO FULL CAPACITY SOILS.

10. J. WALKER/ONEZERONINE RESIDENTIAL DESIGNS LLC. ASSUMES NO LIABILITY FOR ANY HOME CONSTRUCTED FROM THIS PLAN.

11. THIS DESIGN LICENSE IS RELEASED FOR ONE (1) BUILT STRUCTURE ONLY AND IS NOT TRANSFERABLE TO ANOTHER INDIVIDUAL OR COMPANY.

12. ARCHITECTURAL DESIGN ASSUMES ENGINEERED FLOOR SYSTEM IS NOT TO EXCEED 14" IN DEPTH. ENGINEER SHALL RELATE FLOOR DEPTH TO STAIR DESIGN AND MODIFY ACCORDINGLY. NOTE: FLOOR SYSTEMS DEEPER THAN 14" IN DEPTH CAN ADVERSELY IMPACT FLOOR PLAN DESIGN.

13. THE DRAWINGS PREPARED BY J. WALKER/ ONEZERONINE RESIDENTIAL DESIGN LLC. ARE ARCHITECTURAL IN NATURE. STRUCTURAL DRAWINGS SHALL BE PREPARED BY A LOCAL ENGINEER PER LOCAL CODES.

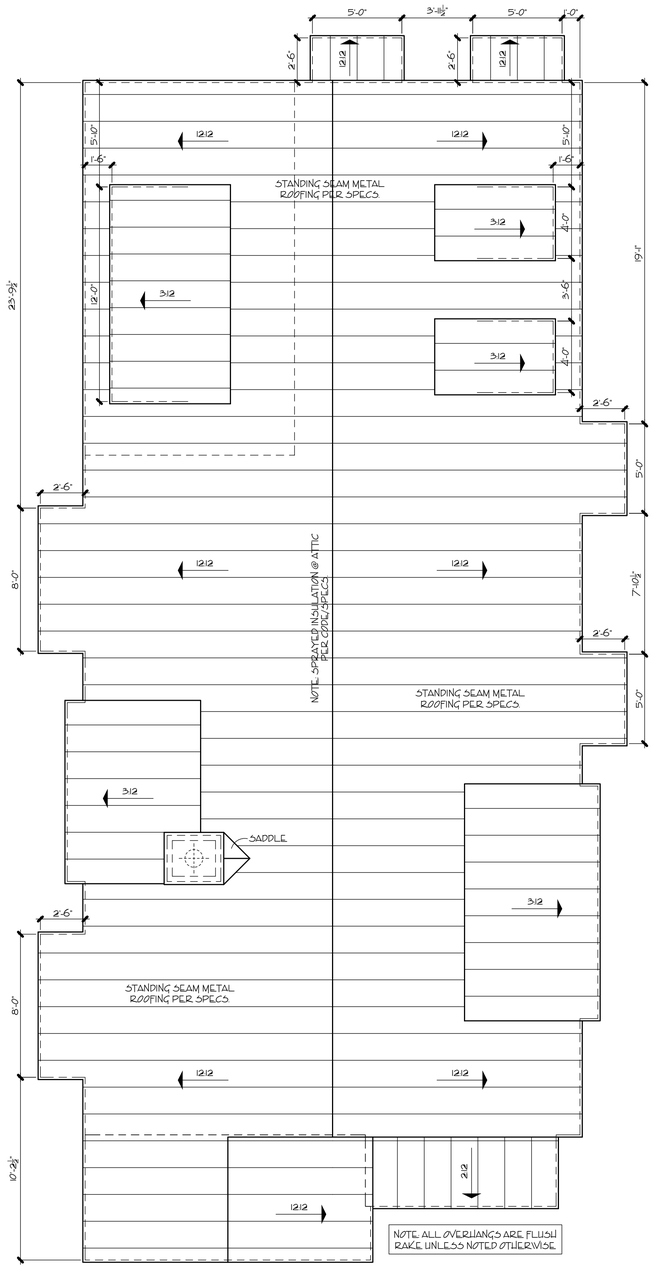

OPT. 1 - ROOF PLAN

SCALE: 1/4" = 1'-0"

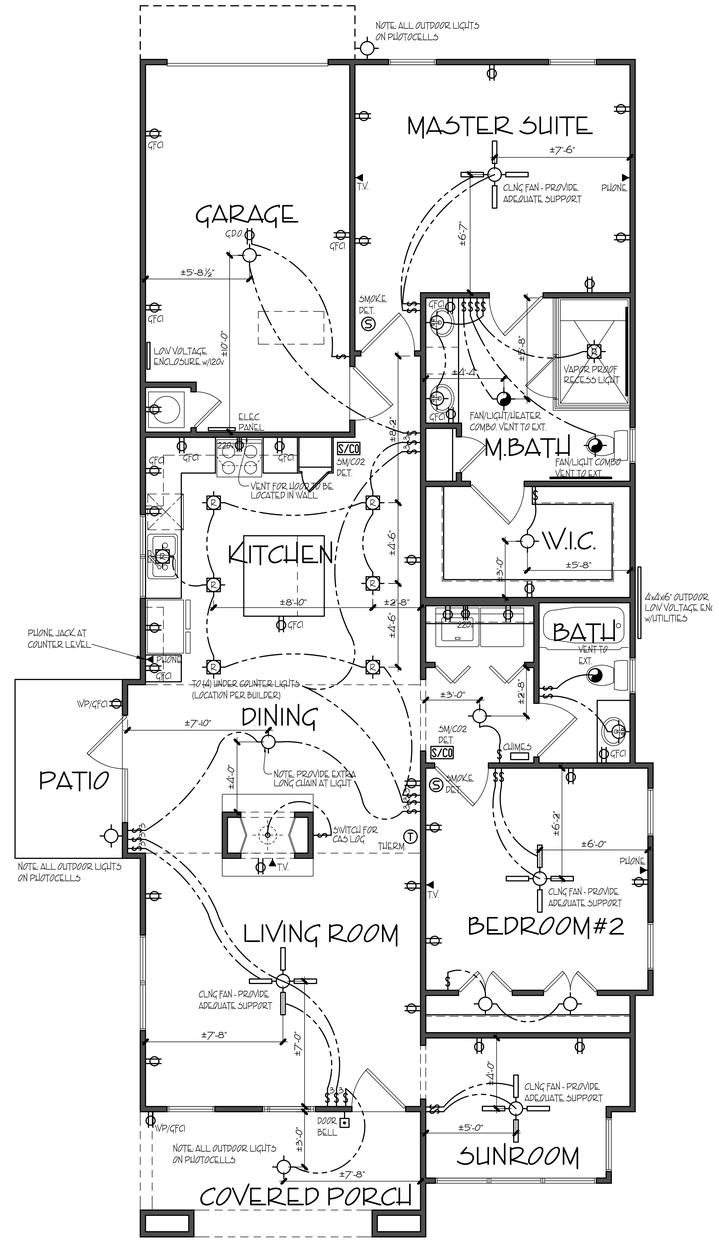

OPT. 1 - 1st FLOOR ELEC.

SCALE: 1/4" = 1'-0"

ELECTRICAL LEGEND

SYMBOL	DESCRIPTION
	DUPLEX OUTLET (GROUNDED TYPE)
GFCI	DUPLEX OUTLET (GROUND FAULT CIRCUIT INTERUPT)
WP/GFCI	DUPLEX OUTLET (WEATHER PROOF/GROUND FAULT CIRCUIT INTERUPT)
220v	220 VOLT OUTLET
TV	TELEVISION ANTENNA/CABLE OUTLET
PHONE	TELEPHONE OUTLET LOCATION
CLIME	DOOR CLIME
	SINGLE POLE WALL SWITCH
3	3-WAY WALL SWITCH
4	4-WAY WALL SWITCH
	CEILING MOUNTED & SUSPENDED LIGHT FIXTURE
	WALL BRACKET MOUNTED LIGHT FIXTURE
	RECESSED CEILING LIGHT FIXTURE
DOUBLE FLOODS	DOUBLE FLOOD LIGHTS
SMOKE DET.	SMOKE DETECTOR
S/CO SMO/CO DET.	SMOKE/CARBON DETECTOR
T THERM	THERMOSTAT
GAS	GAS OUTLET
DOOR BELL	DOOR BELL
	CEILING MOUNTED EXHAUST FAN
	FAN/LIGHT COMBO
	CEILING MOUNTED FAN

Village Park of Alpharetta

BUNGALOW CTG. OPT. 1

ROOF PLAN/ELECTRICAL

17 - 001

REV. NO	REV. DATE/INT.
1	3-27-18

12-05-17

DRAWN BY:	SHEET NO:
JBW	RF-1

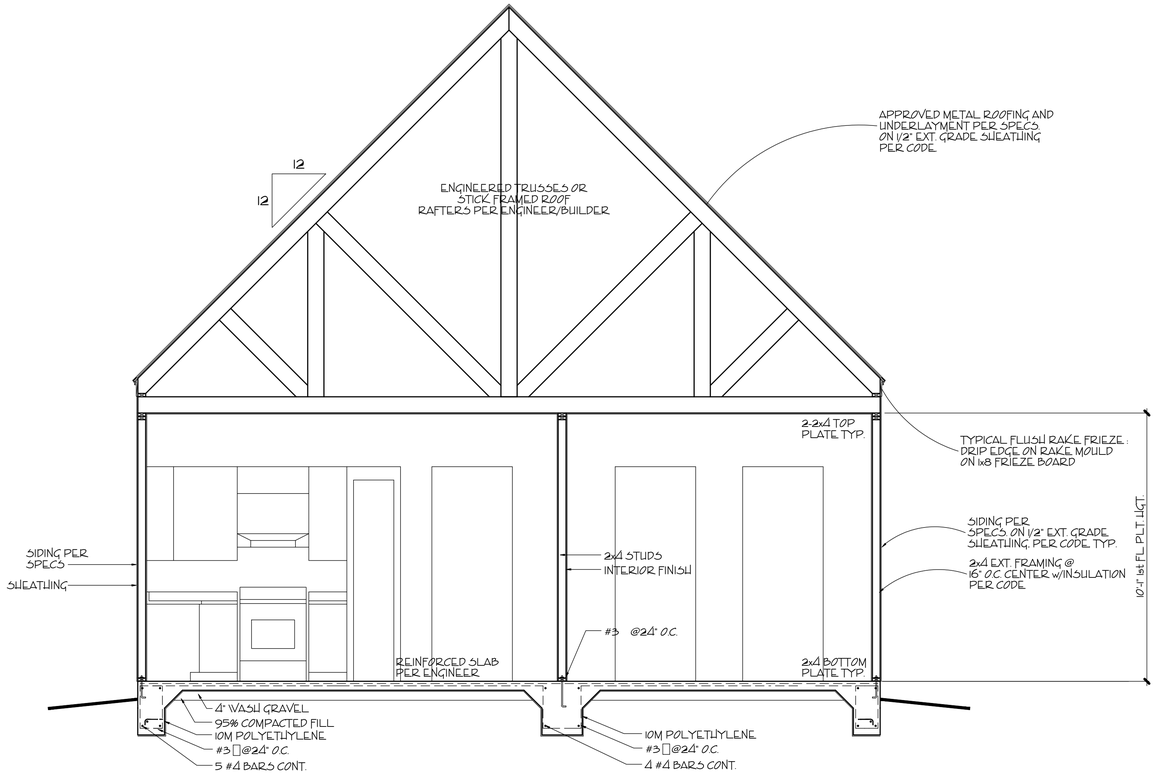

1 / D1 TYPICAL CROSS SECTION

SCALE: 3/8" = 1'-0"

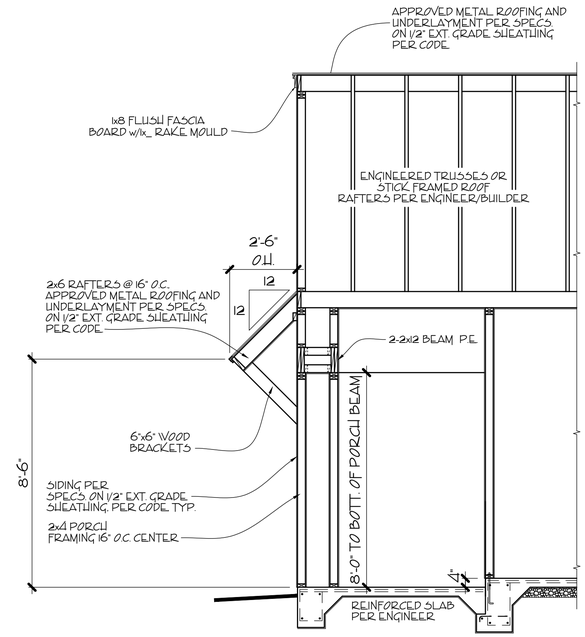

2 / D1 PORCH/COLUMN SECTION

SCALE: 3/8" = 1'-0"

GENERAL NOTES

1. ALL WORK SHALL BE PERFORMED IN ACCORDANCE WITH ALL NATIONAL AND LOCAL CODES, REGULATIONS, AND LATEST CABO INTERNATIONAL BUILDING CODE WITH CURRENT ADDENDUM.

2. CONTRACTOR SHALL VERIFY ALL CONDITIONS AND DIMENSIONS AT THE SITE BEFORE BEGINNING CONSTRUCTION. ANY DISCREPANCIES SHALL BE REPORTED TO J. WALKER/ONEZERONINE, RESIDENTIAL DESIGNS LLC. FOR JUSTIFICATION/CORRECTION BEFORE PROCEEDING WITH THE WORK. CONTRACTOR SHALL ASSUME RESPONSIBILITY FOR ERRORS THAT ARE NOT REPORTED.

3. ALL DIMENSIONS SHALL BE READ OR CALCULATED AND NEVER SCALED.

4. ALL PORTIONS OF FOOTINGS ARE TO BE BELOW LOCAL FROST LINES AND MUST REST ON UNDISTURBED SOIL WITH ADEQUATE BEARING CAPACITY TO SUPPORT THE STRUCTURE. A LOCAL ENGINEER MUST BE CONSULTED FOR PROPER FOOTING AND REINFORCEMENT SIZES.

5. CONTRACTOR TO ENSURE COMPARABILITY OF THE BUILDING WITH ALL SITE REQUIREMENTS.

6. REINFORCE FOUNDATION WALLS PER LOCAL CODES.

7. ALL FOUNDATION AND STRUCTURAL MEMBERS SHALL BE DESIGNED AND STAMPED BY AN ENGINEER. THE CONTRACTOR IS RESPONSIBLE FOR THE ADJUSTMENT AND VERIFICATION OF ALL STRUCTURAL DETAILS AND CONDITIONS TO MEET ALL LOCAL CODES AND TO INSURE A WELL CONSTRUCTED AND SAFE STRUCTURE.

8. ALL WOOD, CONCRETE AND STEEL STRUCTURAL MEMBERS ARE TO MEET NATIONAL, STATE AND LOCAL BUILDING CODES.

9. ALL COLUMNS OR SOLID FRAMING SHALL BE DESIGNED TO CARRY AND TERMINATE LOADS THROUGH THE STRUCTURE TO FOUNDATION ELEMENTS THAT DISTRIBUTE THE LOADS TO FULL CAPACITY SOILS.

10. J. WALKER/ONEZERONINE RESIDENTIAL DESIGNS LLC. ASSUMES NO LIABILITY FOR ANY HOME CONSTRUCTED FROM THIS PLAN.

11. THIS DESIGN LICENSE IS RELEASED FOR ONE (1) BUILT STRUCTURE ONLY AND IS NOT TRANSFERABLE TO ANOTHER INDIVIDUAL OR COMPANY.

12. ARCHITECTURAL DESIGN ASSUMES ENGINEERED FLOOR SYSTEM IS NOT TO EXCEED 14" IN DEPTH. ENGINEER SHALL RELATE FLOOR DEPTH TO STAIR DESIGN AND MODIFY ACCORDINGLY. NOTE: FLOOR SYSTEMS DEEPER THAN 14" IN DEPTH CAN ADVERSELY IMPACT FLOOR PLAN DESIGN.

13. THE DRAWINGS PREPARED BY J. WALKER/ ONEZERONINE RESIDENTIAL DESIGN LLC. ARE ARCHITECTURAL IN NATURE. STRUCTURAL DRAWINGS SHALL BE PREPARED BY A LOCAL ENGINEER PER LOCAL CODES.

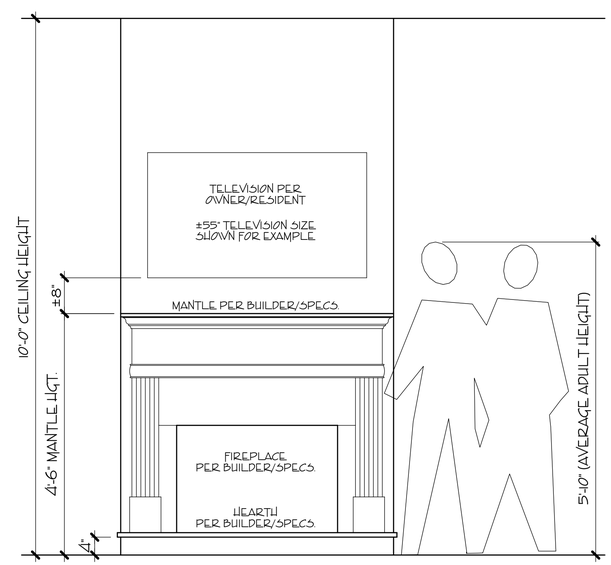

3 / D1 FIREPLACE ELEVATION

SCALE: 3/4" = 1'-0"

Village Park of Alpharetta

BUNGALOW CTG. OPT. 1

CROSS SECTIONS/DETAILS

17-001

REV. NO	REV. DATE/INT.
1	3-27-18

12-05-17

DRAWN BY:	SHEET NO:
JBW	D1 - 1

GENERAL NOTES

1. ALL WORK SHALL BE PERFORMED IN ACCORDANCE WITH ALL NATIONAL AND LOCAL CODES, REGULATIONS, AND LATEST CABO INTERNATIONAL BUILDING CODE WITH CURRENT ADDENDUM.
2. CONTRACTOR SHALL VERIFY ALL CONDITIONS AND DIMENSIONS AT THE SITE BEFORE BEGINNING CONSTRUCTION. ANY DISCREPANCIES SHALL BE REPORTED TO J. WALKER/ONEZERONINE, RESIDENTIAL DESIGNS LLC. FOR JUSTIFICATION/CORRECTION BEFORE PROCEEDING WITH THE WORK. CONTRACTOR SHALL ASSUME RESPONSIBILITY FOR ERRORS THAT ARE NOT REPORTED.
3. ALL DIMENSIONS SHALL BE READ OR CALCULATED AND NEVER SCALED.
4. ALL PORTIONS OF FOOTINGS ARE TO BE BELOW LOCAL FROST LINES AND MUST REST ON UNDISTURBED SOIL WITH ADEQUATE BEARING CAPACITY TO SUPPORT THE STRUCTURE. A LOCAL ENGINEER MUST BE CONSULTED FOR PROPER FOOTING AND REINFORCEMENT SIZES.
5. CONTRACTOR TO ENSURE COMPARABILITY OF THE BUILDING WITH ALL SITE REQUIREMENTS.
6. REINFORCE FOUNDATION WALLS PER LOCAL CODES.
7. ALL FOUNDATION AND STRUCTURAL MEMBERS SHALL BE DESIGNED AND STAMPED BY AN ENGINEER. THE CONTRACTOR IS RESPONSIBLE FOR THE ADJUSTMENT AND VERIFICATION OF ALL STRUCTURAL DETAILS AND CONDITIONS TO MEET ALL LOCAL CODES AND TO INSURE A WELL CONSTRUCTED AND SAFE STRUCTURE.
8. ALL WOOD, CONCRETE AND STEEL STRUCTURAL MEMBERS ARE TO MEET NATIONAL, STATE AND LOCAL BUILDING CODES.
9. ALL COLUMNS OR SOLID FRAMING SHALL BE DESIGNED TO CARRY AND TERMINATE LOADS THROUGH THE STRUCTURE TO FOUNDATION ELEMENTS THAT DISTRIBUTE THE LOADS TO FULL CAPACITY SOILS.
10. J. WALKER/ONEZERONINE RESIDENTIAL DESIGNS LLC. ASSUMES NO LIABILITY FOR ANY HOME CONSTRUCTED FROM THIS PLAN.
11. THIS DESIGN LICENSE IS RELEASED FOR ONE (1) BUILT STRUCTURE ONLY AND IS NOT TRANSFERABLE TO ANOTHER INDIVIDUAL OR COMPANY.
12. ARCHITECTURAL DESIGN ASSUMES ENGINEERED FLOOR SYSTEM IS NOT TO EXCEED 14" IN DEPTH. ENGINEER SHALL RELATE FLOOR DEPTH TO STAIR DESIGN AND MODIFY ACCORDINGLY. NOTE: FLOOR SYSTEMS DEEPER THAN 14" IN DEPTH CAN ADVERSELY IMPACT FLOOR PLAN DESIGN.
13. THE DRAWINGS PREPARED BY J. WALKER/ ONEZERONINE RESIDENTIAL DESIGN LLC. ARE ARCHITECTURAL IN NATURE. STRUCTURAL DRAWINGS SHALL BE PREPARED BY A LOCAL ENGINEER PER LOCAL CODES.

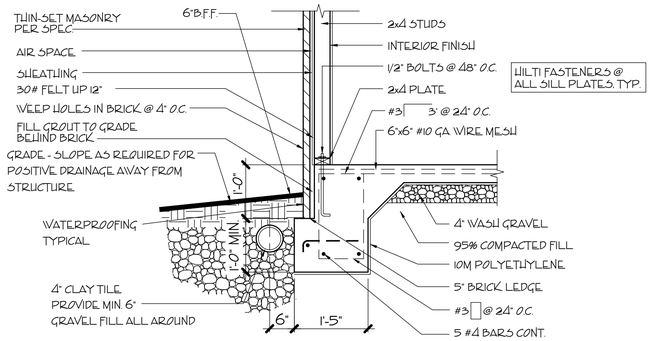

1 / D2 EXTERNAL TURN-DOWN SLAB w/MASONRY

SCALE: 1/2" = 1'-0"

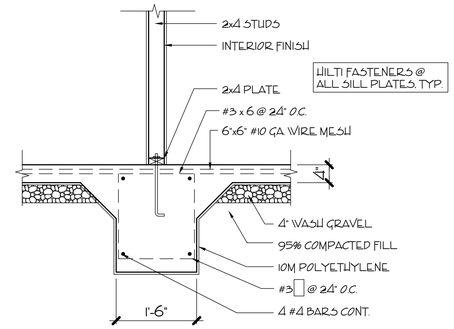

2 / D2 INTERNAL GRADE BEAM

SCALE: 1/2" = 1'-0"

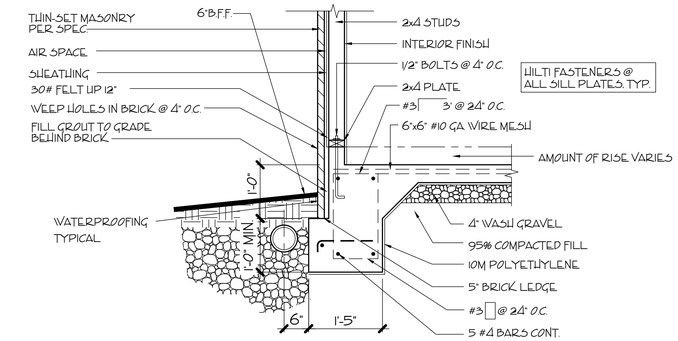

3 / D2 EXT. TURN-DOWN SLAB w/MASONRY (@ GARAGE WALL)

SCALE: 1/2" = 1'-0"

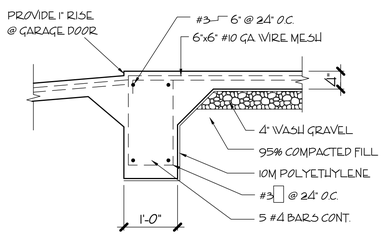

4 / D2 MONOLITHIC GARAGE SLAB (@ GARAGE DOOR)

SCALE: 1/2" = 1'-0"

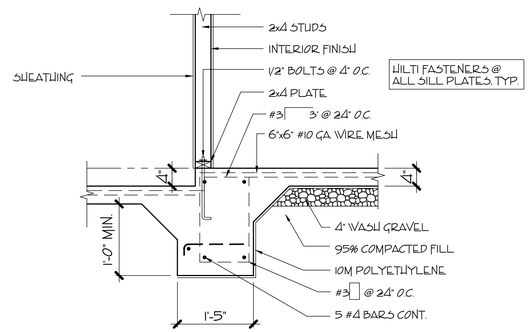

5 / D2 STEPPED DOWN SLAB @ GARAGE

SCALE: 1/2" = 1'-0"

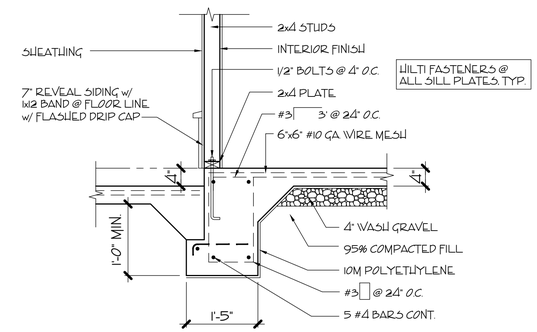

6 / D2 SLAB TO PATIO TRANSITION

SCALE: 1/2" = 1'-0"

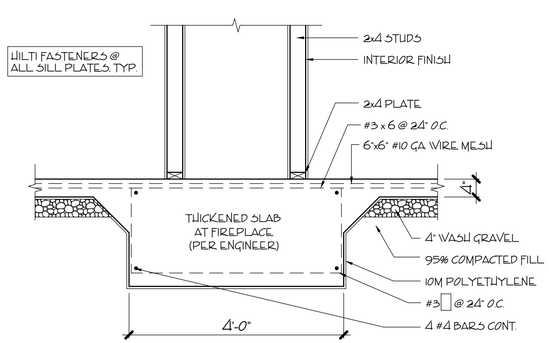

7 / D2 FIREPLACE/SLAB SECTION

SCALE: 1/2" = 1'-0"

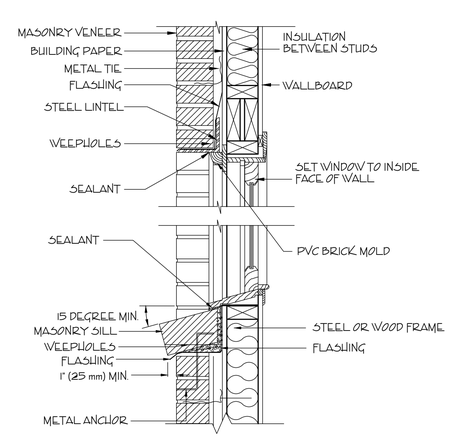

8 / D2 WINDOW/SILL SECTION

SCALE: 1/2" = 1'-0"

Village Park of Alpharetta

BUNGALOW CTG. OPT. 1

DETAILS

17-001

REV. Nº	REV. DATE/INT.
1	3-27-18

12-05-17

DRAWN BY:	SHEET Nº:
JBW	D2-1

GENERAL NOTES

1. ALL WORK SHALL BE PERFORMED IN ACCORDANCE WITH ALL NATIONAL AND LOCAL CODES, REGULATIONS, AND LATEST CABO INTERNATIONAL BUILDING CODE WITH CURRENT ADDENDUM.

2. CONTRACTOR SHALL VERIFY ALL CONDITIONS AND DIMENSIONS AT THE SITE BEFORE BEGINNING CONSTRUCTION. ANY DISCREPANCIES SHALL BE REPORTED TO J. WALKER/ONEZERONINE, RESIDENTIAL DESIGNS LLC. FOR JUSTIFICATION/CORRECTION BEFORE PROCEEDING WITH THE WORK. CONTRACTOR SHALL ASSUME RESPONSIBILITY FOR ERRORS THAT ARE NOT REPORTED.

3. ALL DIMENSIONS SHALL BE READ OR CALCULATED AND NEVER SCALED.

4. ALL PORTIONS OF FOOTINGS ARE TO BE BELOW LOCAL FROST LINES AND MUST REST ON UNDISTURBED SOIL WITH ADEQUATE BEARING CAPACITY TO SUPPORT THE STRUCTURE. A LOCAL ENGINEER MUST BE CONSULTED FOR PROPER FOOTING AND REINFORCEMENT SIZES.

5. CONTRACTOR TO ENSURE COMPARABILITY OF THE BUILDING WITH ALL SITE REQUIREMENTS.

6. REINFORCE FOUNDATION WALLS PER LOCAL CODES.

7. ALL FOUNDATION AND STRUCTURAL MEMBERS SHALL BE DESIGNED AND STAMPED BY AN ENGINEER. THE CONTRACTOR IS RESPONSIBLE FOR THE ADJUSTMENT AND VERIFICATION OF ALL STRUCTURAL DETAILS AND CONDITIONS TO MEET ALL LOCAL CODES AND TO INSURE A WELL CONSTRUCTED AND SAFE STRUCTURE.

8. ALL WOOD, CONCRETE AND STEEL STRUCTURAL MEMBERS ARE TO MEET NATIONAL, STATE AND LOCAL BUILDING CODES.

9. ALL COLUMNS OR SOLID FRAMING SHALL BE DESIGNED TO CARRY AND TERMINATE LOADS THROUGH THE STRUCTURE TO FOUNDATION ELEMENTS THAT DISTRIBUTE THE LOADS TO FULL CAPACITY SOILS.

10. J. WALKER/ONEZERONINE RESIDENTIAL DESIGNS LLC. ASSUMES NO LIABILITY FOR ANY HOME CONSTRUCTED FROM THIS PLAN.

11. THIS DESIGN LICENSE IS RELEASED FOR ONE (1) BUILT STRUCTURE ONLY AND IS NOT TRANSFERABLE TO ANOTHER INDIVIDUAL OR COMPANY.

12. ARCHITECTURAL DESIGN ASSUMES ENGINEERED FLOOR SYSTEM IS NOT TO EXCEED 14" IN DEPTH. ENGINEER SHALL RELATE FLOOR DEPTH TO STAIR DESIGN AND MODIFY ACCORDINGLY. NOTE: FLOOR SYSTEMS DEEPER THAN 14" IN DEPTH CAN ADVERSELY IMPACT FLOOR PLAN DESIGN.

13. THE DRAWINGS PREPARED BY J. WALKER/ ONEZERONINE RESIDENTIAL DESIGN LLC. ARE ARCHITECTURAL IN NATURE. STRUCTURAL DRAWINGS SHALL BE PREPARED BY A LOCAL ENGINEER PER LOCAL CODES.

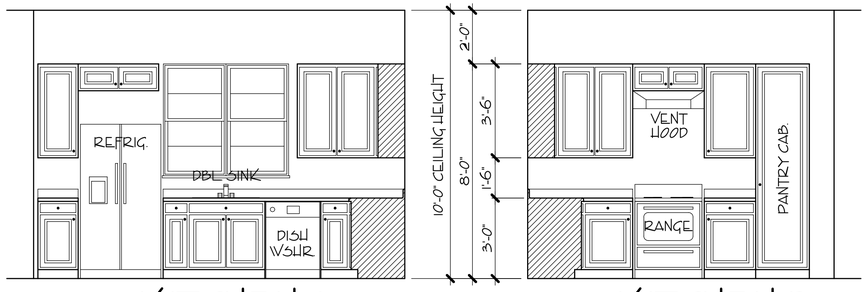

1 / D3 KITCHEN A
SCALE: 3/8" = 1'-0"

2 / D3 KITCHEN B
SCALE: 3/8" = 1'-0"

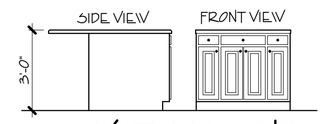

3 / D3 KIT. ISLAND
SCALE: 3/8" = 1'-0"

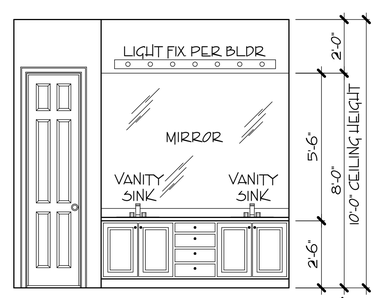

4 / D3 MASTER BATH
SCALE: 3/8" = 1'-0"

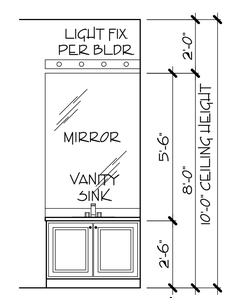

5 / D3 BATH 2
SCALE: 3/8" = 1'-0"

Village Park of Alpharetta

BUNGALOW CTG. OPT. 1

CABINET DETAILS

17-001

REV. NO	REV. DATE/INT.
1	3-27-18

12-05-17

DRAWN BY	SHEET NO
JBW	D3-1

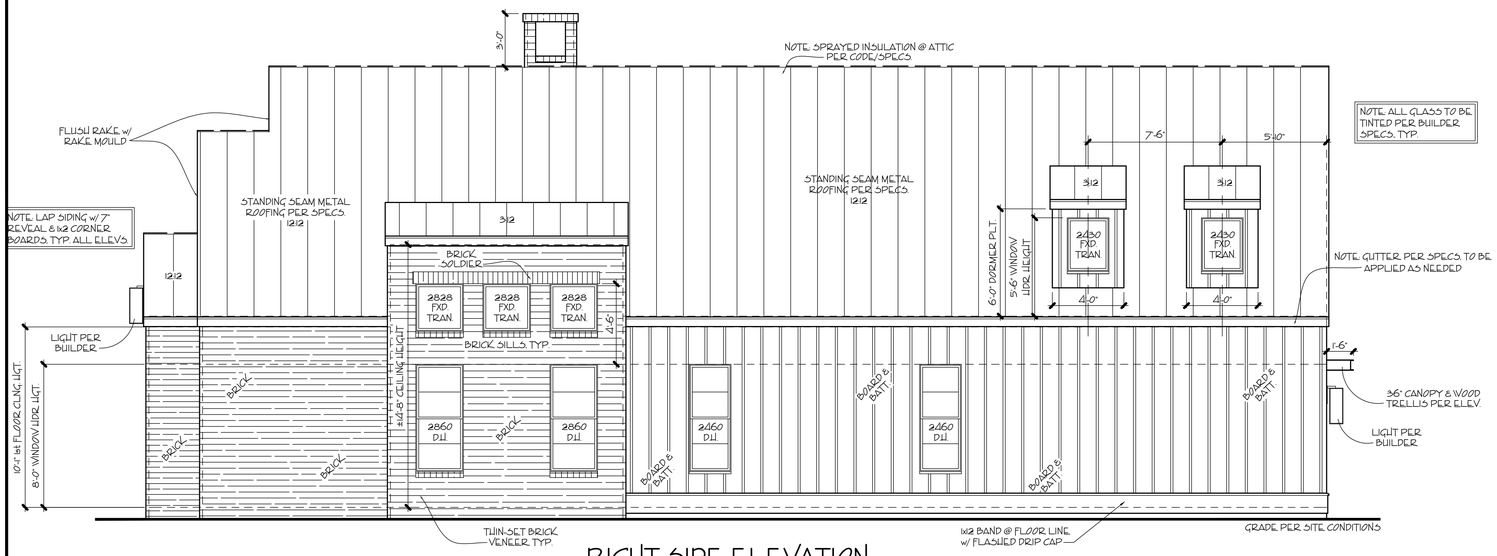

RIGHT SIDE ELEVATION

SCALE: 1/4" = 1'-0"

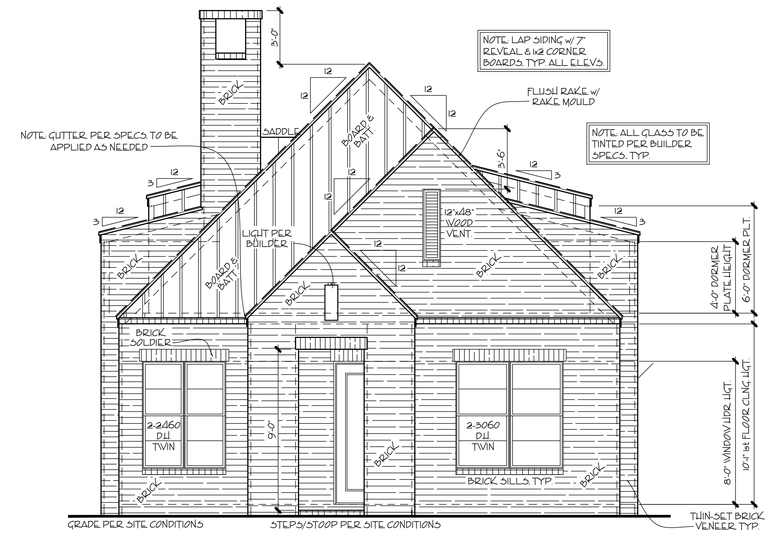

OPT. 2 - FRONT ELEVATION

SCALE: 1/4" = 1'-0"

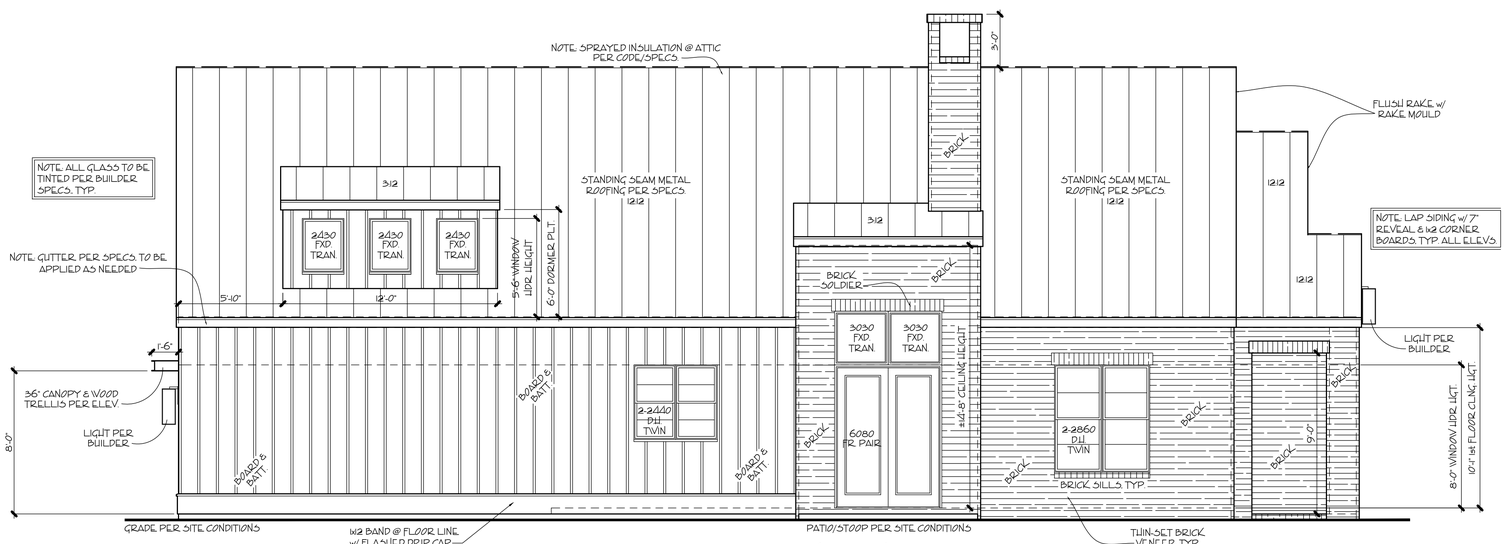

LEFT SIDE ELEVATION

SCALE: 1/4" = 1'-0"

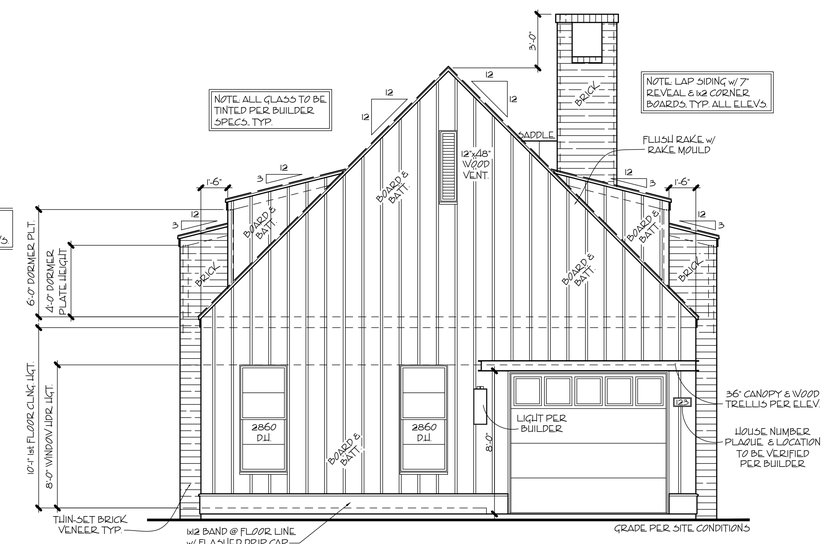

REAR ELEVATION

SCALE: 1/4" = 1'-0"

GENERAL NOTES

1. ALL WORK SHALL BE PERFORMED IN ACCORDANCE WITH ALL NATIONAL AND LOCAL CODES, REGULATIONS, AND LATEST CABO INTERNATIONAL BUILDING CODE WITH CURRENT ADDENDUM.
2. CONTRACTOR SHALL VERIFY ALL CONDITIONS AND DIMENSIONS AT THE SITE BEFORE BEGINNING CONSTRUCTION. ANY DISCREPANCIES SHALL BE REPORTED TO J. WALKER/ONEZERONINE, RESIDENTIAL DESIGNS LLC. FOR JUSTIFICATION/CORRECTION BEFORE PROCEEDING WITH THE WORK. CONTRACTOR SHALL ASSUME RESPONSIBILITY FOR ERRORS THAT ARE NOT REPORTED.
3. ALL DIMENSIONS SHALL BE READ OR CALCULATED AND NEVER SCALED.
4. ALL PORTIONS OF FOOTINGS ARE TO BE BELOW LOCAL FROST LINES AND MUST REST ON UNDISTURBED SOIL WITH ADEQUATE BEARING CAPACITY TO SUPPORT THE STRUCTURE. A LOCAL ENGINEER MUST BE CONSULTED FOR PROPER FOOTING AND REINFORCEMENT SIZES.
5. CONTRACTOR TO ENSURE COMPARABILITY OF THE BUILDING WITH ALL SITE REQUIREMENTS.
6. REINFORCE FOUNDATION WALLS PER LOCAL CODES.
7. ALL FOUNDATION AND STRUCTURAL MEMBERS SHALL BE DESIGNED AND STAMPED BY AN ENGINEER. THE CONTRACTOR IS RESPONSIBLE FOR THE ACCURACY, VERIFICATION OF ALL STRUCTURAL DETAILS AND CONDITIONS TO MEET ALL LOCAL CODES AND TO INSURE A WELL CONSTRUCTED AND SAFE STRUCTURE.
8. ALL WOOD, CONCRETE AND STEEL STRUCTURAL MEMBERS ARE TO MEET NATIONAL, STATE AND LOCAL BUILDING CODES.
9. ALL COLUMNS OR SOLID FRAMING SHALL BE DESIGNED TO CARRY AND TRANSFER LOADS THROUGH THE STRUCTURE TO FOUNDATION ELEMENTS THAT DISTRIBUTE THE LOADS TO FULL CAPACITY SOILS.
10. J. WALKER/ONEZERONINE RESIDENTIAL DESIGNS LLC. ASSUMES NO LIABILITY FOR ANY HOME CONSTRUCTED FROM THIS PLAN.
11. THIS DESIGN LICENSE IS RELEASED FOR ONE (1) BUILT STRUCTURE ONLY AND IS NOT TRANSFERABLE TO ANOTHER INDIVIDUAL OR COMPANY.
12. ARCHITECTURAL DESIGN ASSUMES ENGINEERED FLOOR TRUSSES AND TO ACCEPT A QUALIFIED ENGINEER SHALL RELATE FLOOR DEPTH TO STAIR DESIGN AND MODIFY ACCORDINGLY. NOTE: FLOOR SYSTEMS DEEPER THAN 14" IN DEPTH CAN ADVERSELY IMPACT FLOOR PLAN DESIGN.
13. THE DRAWINGS PREPARED BY J. WALKER/ ONEZERONINE RESIDENTIAL DESIGN LLC. ARE ARCHITECTURAL IN NATURE. STRUCTURAL DRAWINGS SHALL BE PREPARED BY A LOCAL ENGINEER PER LOCAL CODES.

Village Park of Alpharetta

BUNGALOW CTG. OPT.2

ELEVATIONS

17-001

REV. NO.	REV. DATE/INT.
1	3-27-18

12-05-17

DRAWN BY:	SHEET NO.
JBW	E1-2

GENERAL NOTES

1. ALL WORK SHALL BE PERFORMED IN ACCORDANCE WITH ALL NATIONAL AND LOCAL CODES, REGULATIONS, AND LATEST CABO INTERNATIONAL BUILDING CODE WITH CURRENT ADDENDUM.
2. CONTRACTOR SHALL VERIFY ALL CONDITIONS AND DIMENSIONS AT THE SITE BEFORE BEGINNING CONSTRUCTION. ANY DISCREPANCIES SHALL BE REPORTED TO J. WALKER/ONEZERONINE, RESIDENTIAL DESIGNS LLC. FOR JUSTIFICATION/CORRECTION BEFORE PROCEEDING WITH THE WORK. CONTRACTOR SHALL ASSUME RESPONSIBILITY FOR ERRORS THAT ARE NOT REPORTED.
3. ALL DIMENSIONS SHALL BE READ OR CALCULATED AND NEVER SCALED.
4. ALL PORTIONS OF FOOTINGS ARE TO BE BELOW LOCAL FROST LINES AND MUST REST ON UNDISTURBED SOIL WITH ADEQUATE BEARING CAPACITY TO SUPPORT THE STRUCTURE. A LOCAL ENGINEER MUST BE CONSULTED FOR PROPER FOOTING AND REINFORCEMENT SIZES.
5. CONTRACTOR TO ENSURE COMPARABILITY OF THE BUILDING WITH ALL SITE REQUIREMENTS.
6. REINFORCE FOUNDATION WALLS PER LOCAL CODES.
7. ALL FOUNDATION AND STRUCTURAL MEMBERS SHALL BE DESIGNED AND STAMPED BY AN ENGINEER. THE CONTRACTOR IS RESPONSIBLE FOR THE ADJUSTMENT AND VERIFICATION OF ALL STRUCTURAL DETAILS AND CONDITIONS TO MEET ALL LOCAL CODES AND TO INSURE A WELL CONSTRUCTED AND SAFE STRUCTURE.
8. ALL WOOD, CONCRETE AND STEEL STRUCTURAL MEMBERS ARE TO MEET NATIONAL, STATE AND LOCAL BUILDING CODES.
9. ALL COLUMNS OR SOLID FRAMING SHALL BE DESIGNED TO CARRY AND TERMINATE LOADS THROUGH THE STRUCTURE TO FOUNDATION ELEMENTS THAT DISTRIBUTE THE LOADS TO FULL CAPACITY SOILS.
10. J. WALKER/ONEZERONINE RESIDENTIAL DESIGNS LLC. ASSUMES NO LIABILITY FOR ANY HOME CONSTRUCTED FROM THIS PLAN.
11. THIS DESIGN LICENSE IS RELEASED FOR ONE (1) BUILT STRUCTURE ONLY AND IS NOT TRANSFERABLE TO ANOTHER INDIVIDUAL OR COMPANY.
12. ARCHITECTURAL DESIGN ASSUMES ENGINEERED FLOOR SYSTEM IS NOT TO EXCEED 14" IN DEPTH. ENGINEER SHALL RELATE FLOOR DEPTH TO STAIR DESIGN AND MODIFY ACCORDINGLY. NOTE: FLOOR SYSTEMS DEEPER THAN 14" IN DEPTH CAN ADVERSELY IMPACT FLOOR PLAN DESIGN.
13. THE DRAWINGS PREPARED BY J. WALKER/ ONEZERONINE RESIDENTIAL DESIGN LLC. ARE ARCHITECTURAL IN NATURE. STRUCTURAL DRAWINGS SHALL BE PREPARED BY A LOCAL ENGINEER PER LOCAL CODES.

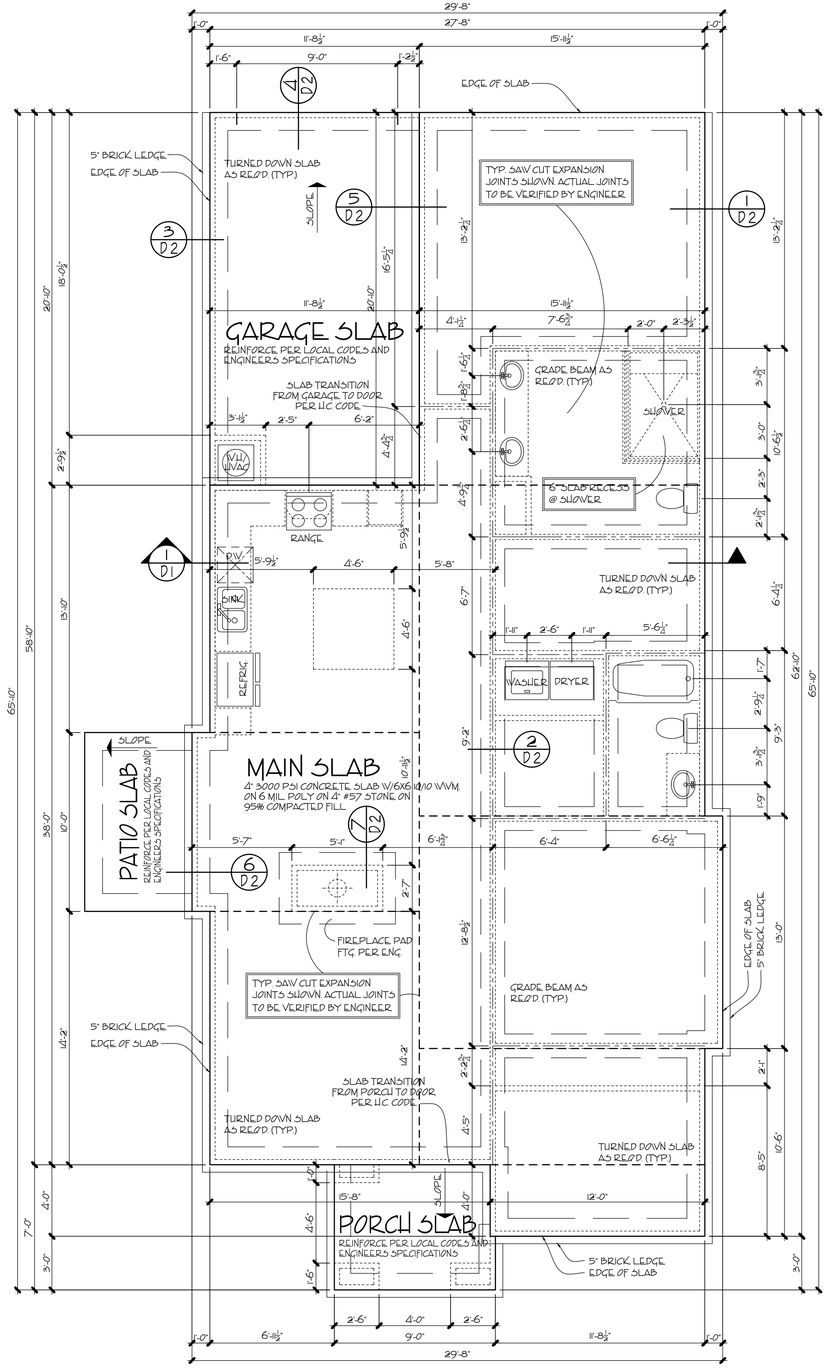

OPT. 2 - SLAB PLAN

SCALE: 1/4" = 1'-0"

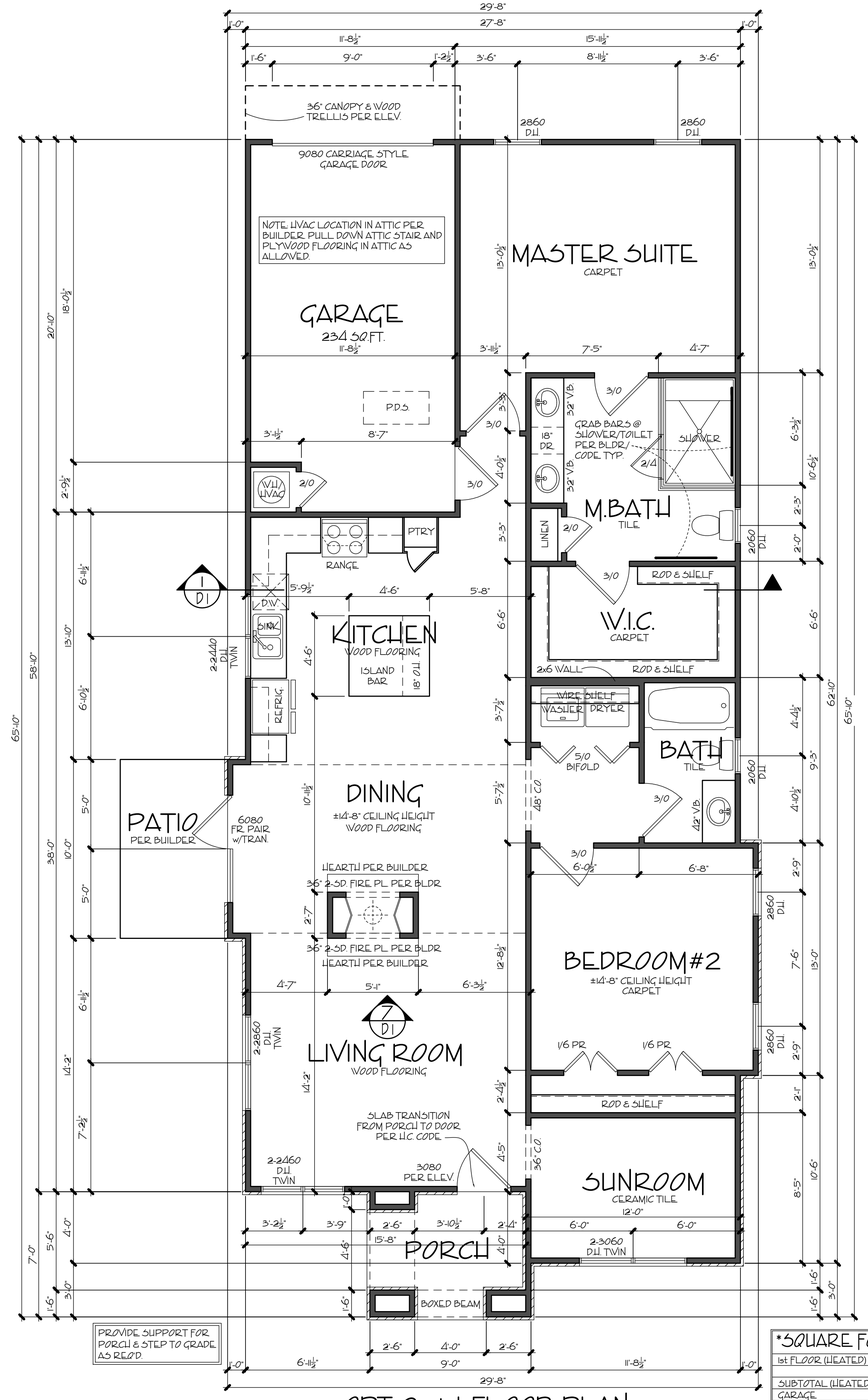

OPT. 2 - 1st FLOOR PLAN

SCALE: 1/4" = 1'-0"

*SQUARE FOOTAGES	
1st FLOOR (HEATED)	1,456 S.F.
SUBTOTAL (HEATED)	1,456 S.F.
GARAGE	244 S.F.
PORCH	62 S.F.
GROSS TOTAL	1,762 S.F.

*CALCULATED PER I.R.C. INDUSTRY STD. TO OUTSIDE FACE OF STUD
STAIRS & 2-STORY COUNTED ONCE.

Village Park of Alpharetta

BUNGALOW CTG. OPT. 2

1st FL. PLAN/SLAB PLAN

17-001

REV. NO	REV. DATE/INT.
1	3-27-18

12-05-17

DRAWN BY:	SHEET NO.
JBW	A1-2

GENERAL NOTES

1. ALL WORK SHALL BE PERFORMED IN ACCORDANCE WITH ALL NATIONAL AND LOCAL CODES, REGULATIONS, AND LATEST CABO INTERNATIONAL BUILDING CODE WITH CURRENT ADDENDUM.

2. CONTRACTOR SHALL VERIFY ALL CONDITIONS AND DIMENSIONS AT THE SITE BEFORE BEGINNING CONSTRUCTION. ANY DISCREPANCIES SHALL BE REPORTED TO J. WALKER/ONEZERONINE, RESIDENTIAL DESIGNS LLC. FOR JUSTIFICATION/CORRECTION BEFORE PROCEEDING WITH THE WORK. CONTRACTOR SHALL ASSUME RESPONSIBILITY FOR ERRORS THAT ARE NOT REPORTED.

3. ALL DIMENSIONS SHALL BE READ OR CALCULATED AND NEVER SCALED.

4. ALL PORTIONS OF FOOTINGS ARE TO BE BELOW LOCAL FROST LINES AND MUST REST ON UNDISTURBED SOIL WITH ADEQUATE BEARING CAPACITY TO SUPPORT THE STRUCTURE. A LOCAL ENGINEER MUST BE CONSULTED FOR PROPER FOOTING AND REINFORCEMENT SIZES.

5. CONTRACTOR TO ENSURE COMPARABILITY OF THE BUILDING WITH ALL SITE REQUIREMENTS.

6. REINFORCE FOUNDATION WALLS PER LOCAL CODES.

7. ALL FOUNDATION AND STRUCTURAL MEMBERS SHALL BE DESIGNED AND STAMPED BY AN ENGINEER. THE CONTRACTOR IS RESPONSIBLE FOR THE ADJUSTMENT AND VERIFICATION OF ALL STRUCTURAL DETAILS AND CONDITIONS TO MEET ALL LOCAL CODES AND TO INSURE A WELL CONSTRUCTED AND SAFE STRUCTURE.

8. ALL WOOD, CONCRETE AND STEEL STRUCTURAL MEMBERS ARE TO MEET NATIONAL, STATE AND LOCAL BUILDING CODES.

9. ALL COLUMNS OR SOLID FRAMING SHALL BE DESIGNED TO CARRY AND TERMINATE LOADS THROUGH THE STRUCTURE TO FOUNDATION ELEMENTS THAT DISTRIBUTE THE LOADS TO FULL CAPACITY SOILS.

10. J. WALKER/ONEZERONINE RESIDENTIAL DESIGNS LLC. ASSUMES NO LIABILITY FOR ANY HOME CONSTRUCTED FROM THIS PLAN.

11. THIS DESIGN LICENSE IS RELEASED FOR ONE (1) BUILT STRUCTURE ONLY AND IS NOT TRANSFERABLE TO ANOTHER INDIVIDUAL OR COMPANY.

12. ARCHITECTURAL DESIGN ASSUMES ENGINEERED FLOOR SYSTEM IS NOT TO EXCEED 14" IN DEPTH. ENGINEER SHALL RELATE FLOOR DEPTH TO STAIR DESIGN AND MODIFY ACCORDINGLY. NOTE: FLOOR SYSTEMS DEEPER THAN 14" IN DEPTH CAN ADVERSELY IMPACT FLOOR PLAN DESIGN.

13. THE DRAWINGS PREPARED BY J. WALKER/ ONEZERONINE RESIDENTIAL DESIGN LLC. ARE ARCHITECTURAL IN NATURE. STRUCTURAL DRAWINGS SHALL BE PREPARED BY A LOCAL ENGINEER PER LOCAL CODES.

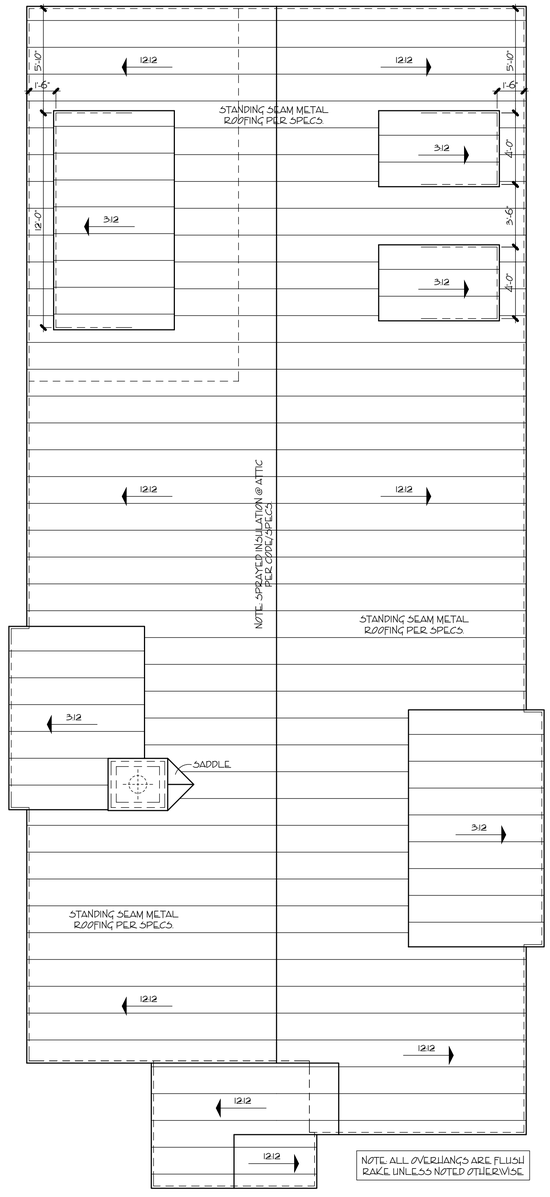

OPT. 2 - ROOF PLAN

SCALE: 1/4" = 1'-0"

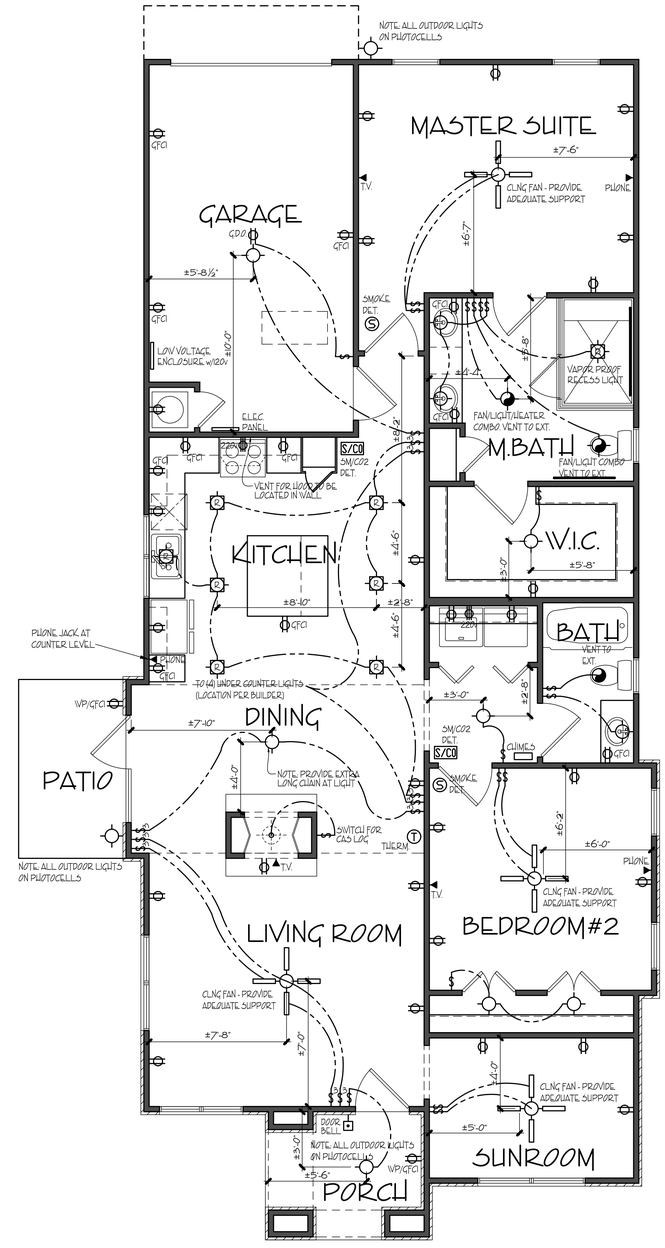

OPT. 2 - 1st FLOOR ELEC.

SCALE: 1/4" = 1'-0"

ELECTRICAL LEGEND

SYMBOL	DESCRIPTION
	DUPLEX OUTLET (GROUNDED TYPE)
GFCI	DUPLEX OUTLET (GROUND FAULT CIRCUIT INTERUPT)
WP/GFCI	DUPLEX OUTLET (WEATHER PROOF/GROUND FAULT CIRCUIT INTERUPT)
220V	220 VOLT OUTLET
TV	TELEVISION ANTENNA/CABLE OUTLET
PHONE	TELEPHONE OUTLET LOCATION
CLIMS	DOOR CLIMS
	SINGLE POLE WALL SWITCH
3	3-WAY WALL SWITCH
4	4-WAY WALL SWITCH
	CEILING MOUNTED & SUSPENDED LIGHT FIXTURE
	WALL BRACKET MOUNTED LIGHT FIXTURE
	RECESSED CEILING LIGHT FIXTURE
DOUBLE FLOODS	DOUBLE FLOOD LIGHTS
SMOKE DET.	SMOKE DETECTOR
S/CO	SM/CO2 DET.	SMOKE/CARBON DETECTOR
T	THERM	THERMOSTAT
	GAS	GAS OUTLET
DOOR BELL	DOOR BELL
	CEILING MOUNTED EXHAUST FAN
	FAN/LIGHT COMBO
	CEILING MOUNTED FAN

Village Park of Alpharetta

BUNGALOW CTG. OPT. 2

ROOF PLAN/ELECTRICAL

17-001

REV. NO	REV. DATE/INT.
1	3-27-18

12-05-17

DRAWN BY:	SHEET NO:
JBW	RF-2

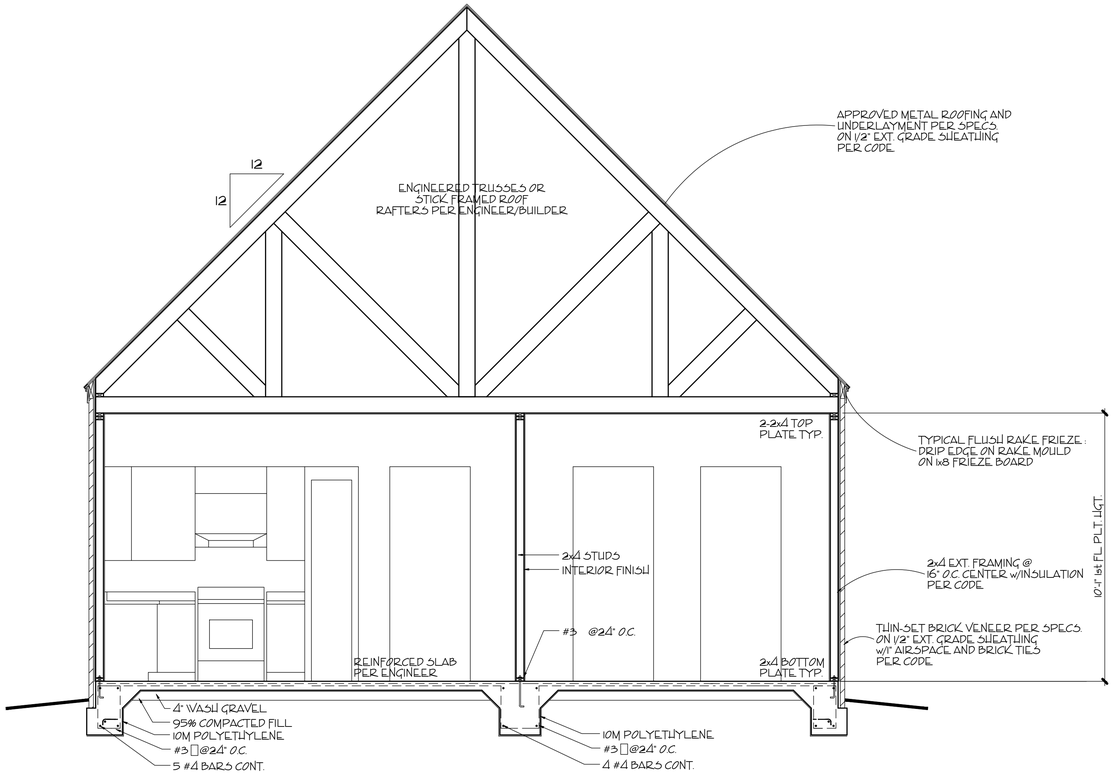

1 / D1 TYPICAL CROSS SECTION

SCALE: 3/8" = 1'-0"

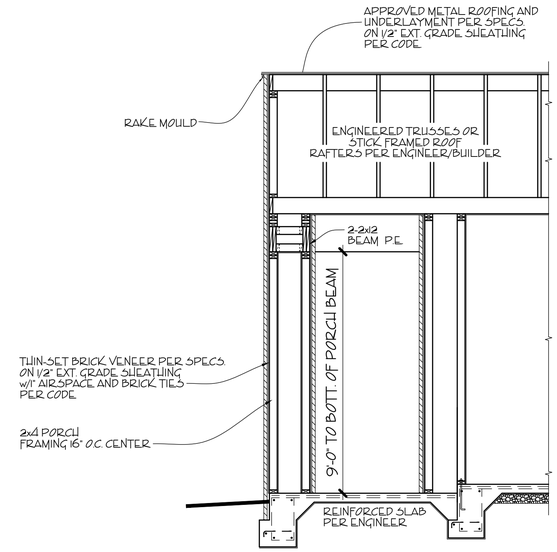

2 / D1 PORCH/COLUMN SECTION

SCALE: 3/8" = 1'-0"

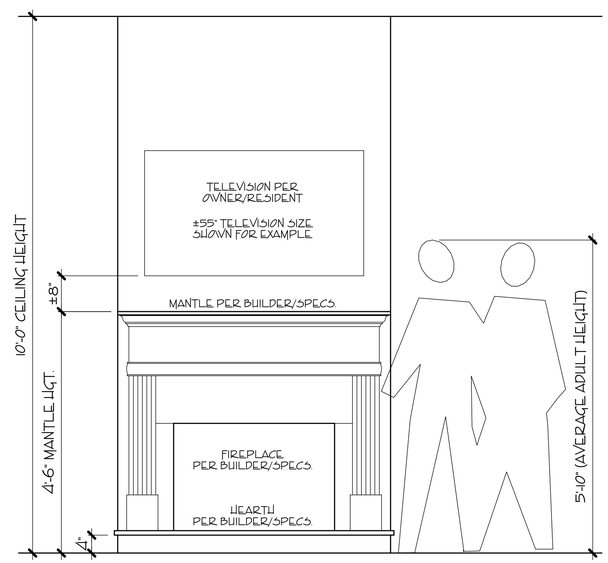

3 / D1 FIREPLACE ELEVATION

SCALE: 3/4" = 1'-0"

GENERAL NOTES

1. ALL WORK SHALL BE PERFORMED IN ACCORDANCE WITH ALL NATIONAL AND LOCAL CODES, REGULATIONS, AND LATEST CABO INTERNATIONAL BUILDING CODE WITH CURRENT ADDENDUM.

2. CONTRACTOR SHALL VERIFY ALL CONDITIONS AND DIMENSIONS AT THE SITE BEFORE BEGINNING CONSTRUCTION. ANY DISCREPANCIES SHALL BE REPORTED TO J. WALKER/ONEZERONINE, RESIDENTIAL DESIGNS LLC. FOR JUSTIFICATION/CORRECTION BEFORE PROCEEDING WITH THE WORK. CONTRACTOR SHALL ASSUME RESPONSIBILITY FOR ERRORS THAT ARE NOT REPORTED.

3. ALL DIMENSIONS SHALL BE READ OR CALCULATED AND NEVER SCALED.

4. ALL PORTIONS OF FOOTINGS ARE TO BE BELOW LOCAL FROST LINES AND MUST REST ON UNDISTURBED SOIL WITH ADEQUATE BEARING CAPACITY TO SUPPORT THE STRUCTURE. A LOCAL ENGINEER MUST BE CONSULTED FOR PROPER FOOTING AND REINFORCEMENT SIZES.

5. CONTRACTOR TO ENSURE COMPARABILITY OF THE BUILDING WITH ALL SITE REQUIREMENTS.

6. REINFORCE FOUNDATION WALLS PER LOCAL CODES.

7. ALL FOUNDATION AND STRUCTURAL MEMBERS SHALL BE DESIGNED AND STAMPED BY AN ENGINEER. THE CONTRACTOR IS RESPONSIBLE FOR THE ADJUSTMENT AND VERIFICATION OF ALL STRUCTURAL DETAILS AND CONDITIONS TO MEET ALL LOCAL CODES AND TO INSURE A WELL CONSTRUCTED AND SAFE STRUCTURE.

8. ALL WOOD, CONCRETE AND STEEL STRUCTURAL MEMBERS ARE TO MEET NATIONAL, STATE AND LOCAL BUILDING CODES.

9. ALL COLUMNS OR SOLID FRAMING SHALL BE DESIGNED TO CARRY AND TERMINATE LOADS THROUGH THE STRUCTURE TO FOUNDATION ELEMENTS THAT DISTRIBUTE THE LOADS TO FULL CAPACITY SOILS.

10. J. WALKER/ONEZERONINE RESIDENTIAL DESIGNS LLC. ASSUMES NO LIABILITY FOR ANY HOME CONSTRUCTED FROM THIS PLAN.

11. THIS DESIGN LICENSE IS RELEASED FOR ONE (1) BUILT STRUCTURE ONLY AND IS NOT TRANSFERABLE TO ANOTHER INDIVIDUAL OR COMPANY.

12. ARCHITECTURAL DESIGN ASSUMES ENGINEERED FLOOR SYSTEM IS NOT TO EXCEED 14" IN DEPTH. ENGINEER SHALL RELATE FLOOR DEPTH TO STAIR DESIGN AND MODIFY ACCORDINGLY. NOTE: FLOOR SYSTEMS DEEPER THAN 14" IN DEPTH CAN ADVERSELY IMPACT FLOOR PLAN DESIGN.

13. THE DRAWINGS PREPARED BY J. WALKER/ ONEZERONINE RESIDENTIAL DESIGN LLC. ARE ARCHITECTURAL IN NATURE. STRUCTURAL DRAWINGS SHALL BE PREPARED BY A LOCAL ENGINEER PER LOCAL CODES.

Village Park of Alpharetta

BUNGALOW CTG. OPT. 2

CROSS SECTIONS/DETAILS

17-001

REV. NO	REV. DATE/INT.
1	3-27-18

12-05-17

DRAWN BY:	SHEET NO:
JBW	D1 - 2

GENERAL NOTES

1. ALL WORK SHALL BE PERFORMED IN ACCORDANCE WITH ALL NATIONAL AND LOCAL CODES, REGULATIONS, AND LATEST CABO INTERNATIONAL BUILDING CODE WITH CURRENT ADDENDUM.
2. CONTRACTOR SHALL VERIFY ALL CONDITIONS AND DIMENSIONS AT THE SITE BEFORE BEGINNING CONSTRUCTION. ANY DISCREPANCIES SHALL BE REPORTED TO J. WALKER/ONEZERONINE, RESIDENTIAL DESIGNS LLC. FOR JUSTIFICATION/CORRECTION BEFORE PROCEEDING WITH THE WORK. CONTRACTOR SHALL ASSUME RESPONSIBILITY FOR ERRORS THAT ARE NOT REPORTED.
3. ALL DIMENSIONS SHALL BE READ OR CALCULATED AND NEVER SCALED.
4. ALL PORTIONS OF FOOTINGS ARE TO BE BELOW LOCAL FROST LINES AND MUST REST ON UNDISTURBED SOIL WITH ADEQUATE BEARING CAPACITY TO SUPPORT THE STRUCTURE. A LOCAL ENGINEER MUST BE CONSULTED FOR PROPER FOOTING AND REINFORCEMENT SIZES.
5. CONTRACTOR TO ENSURE COMPARABILITY OF THE BUILDING WITH ALL SITE REQUIREMENTS.
6. REINFORCE FOUNDATION WALLS PER LOCAL CODES.
7. ALL FOUNDATION AND STRUCTURAL MEMBERS SHALL BE DESIGNED AND STAMPED BY AN ENGINEER. THE CONTRACTOR IS RESPONSIBLE FOR THE ADJUSTMENT AND VERIFICATION OF ALL STRUCTURAL DETAILS AND CONDITIONS TO MEET ALL LOCAL CODES AND TO INSURE A WELL CONSTRUCTED AND SAFE STRUCTURE.
8. ALL WOOD, CONCRETE AND STEEL STRUCTURAL MEMBERS ARE TO MEET NATIONAL, STATE AND LOCAL BUILDING CODES.
9. ALL COLUMNS OR SOLID FRAMING SHALL BE DESIGNED TO CARRY AND TERMINATE LOADS THROUGH THE STRUCTURE TO FOUNDATION ELEMENTS THAT DISTRIBUTE THE LOADS TO FULL CAPACITY SOILS.
10. J. WALKER/ONEZERONINE RESIDENTIAL DESIGNS LLC. ASSUMES NO LIABILITY FOR ANY HOME CONSTRUCTED FROM THIS PLAN.
11. THIS DESIGN LICENSE IS RELEASED FOR ONE (1) BUILT STRUCTURE ONLY AND IS NOT TRANSFERABLE TO ANOTHER INDIVIDUAL OR COMPANY.
12. ARCHITECTURAL DESIGN ASSUMES ENGINEERED FLOOR SYSTEM IS NOT TO EXCEED 14" IN DEPTH. ENGINEER SHALL RELATE FLOOR DEPTH TO STAIR DESIGN AND MODIFY ACCORDINGLY. NOTE: FLOOR SYSTEMS DEEPER THAN 14" IN DEPTH CAN ADVERSELY IMPACT FLOOR PLAN DESIGN.
13. THE DRAWINGS PREPARED BY J. WALKER/ ONEZERONINE RESIDENTIAL DESIGN LLC. ARE ARCHITECTURAL IN NATURE. STRUCTURAL DRAWINGS SHALL BE PREPARED BY A LOCAL ENGINEER PER LOCAL CODES.

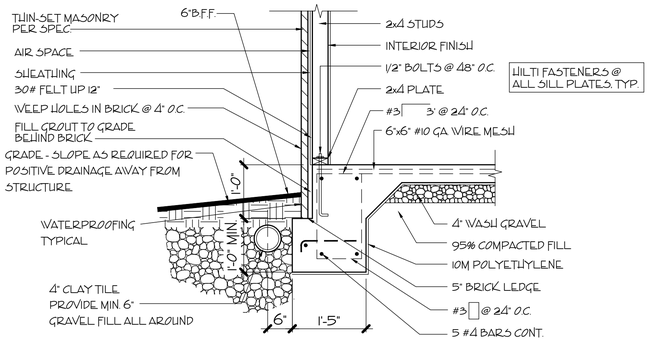

1 / D2 EXTERNAL TURN-DOWN SLAB w/MASONRY

SCALE: 1/2" = 1'-0"

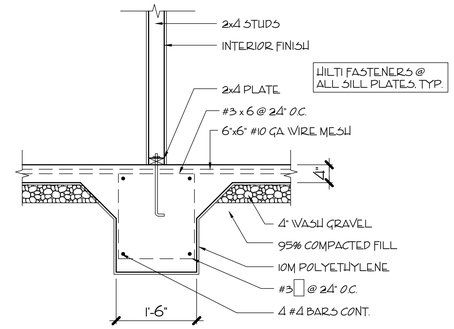

2 / D2 INTERNAL GRADE BEAM

SCALE: 1/2" = 1'-0"

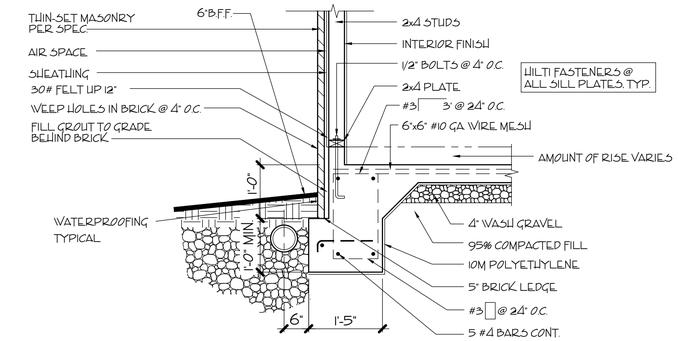

3 / D2 EXT. TURN-DOWN SLAB w/MASONRY (@ GARAGE WALL)

SCALE: 1/2" = 1'-0"

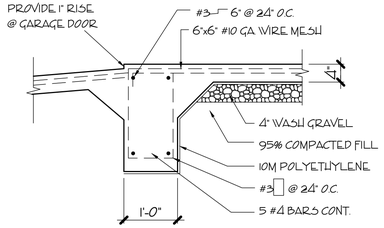

4 / D2 MONOLITHIC GARAGE SLAB (@ GARAGE DOOR)

SCALE: 1/2" = 1'-0"

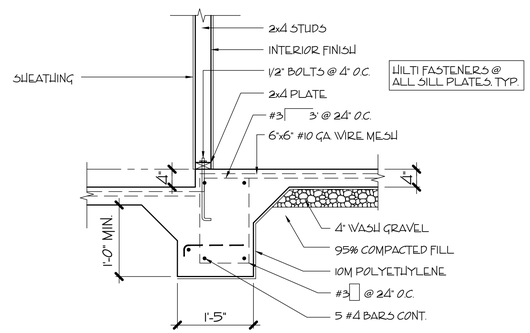

5 / D2 STEPPED DOWN SLAB @ GARAGE

SCALE: 1/2" = 1'-0"

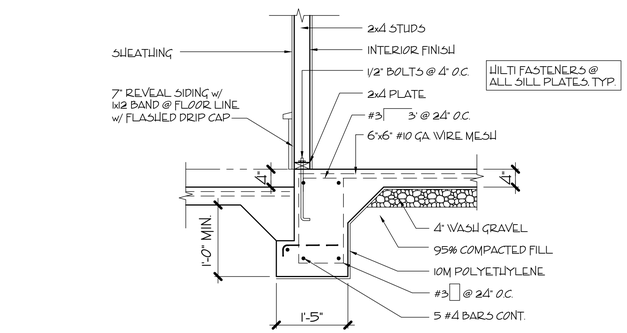

6 / D2 SLAB TO PATIO TRANSITION

SCALE: 1/2" = 1'-0"

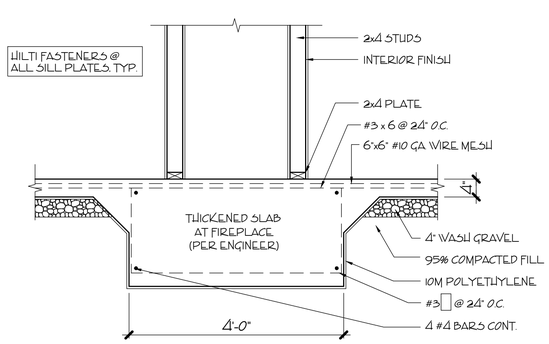

7 / D2 FIREPLACE/SLAB SECTION

SCALE: 1/2" = 1'-0"

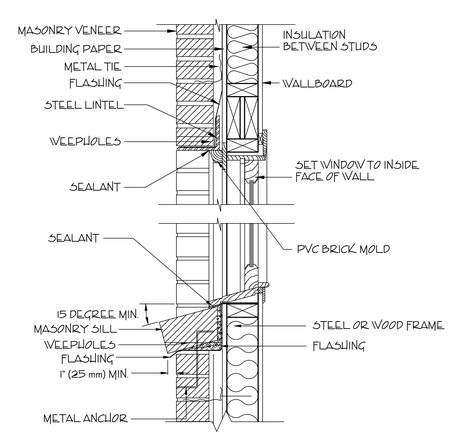

8 / D2 WINDOW/SILL SECTION

SCALE: 1/2" = 1'-0"

Village Park of Alpharetta

BUNGALOW CTG. OPT. 2

DETAILS

17-001

REV. NO	REV. DATE/INT.
1	3-27-18

12-05-17

DRAWN BY:	SHEET NO:
JBW	D2-2

GENERAL NOTES

1. ALL WORK SHALL BE PERFORMED IN ACCORDANCE WITH ALL NATIONAL AND LOCAL CODES, REGULATIONS, AND LATEST CABO INTERNATIONAL BUILDING CODE WITH CURRENT ADDENDUM.

2. CONTRACTOR SHALL VERIFY ALL CONDITIONS AND DIMENSIONS AT THE SITE BEFORE BEGINNING CONSTRUCTION. ANY DISCREPANCIES SHALL BE REPORTED TO J. WALKER/ONEZERONINE, RESIDENTIAL DESIGNS LLC. FOR JUSTIFICATION/CORRECTION BEFORE PROCEEDING WITH THE WORK. CONTRACTOR SHALL ASSUME RESPONSIBILITY FOR ERRORS THAT ARE NOT REPORTED.

3. ALL DIMENSIONS SHALL BE READ OR CALCULATED AND NEVER SCALED.

4. ALL PORTIONS OF FOOTINGS ARE TO BE BELOW LOCAL FROST LINES AND MUST REST ON UNDISTURBED SOIL WITH ADEQUATE BEARING CAPACITY TO SUPPORT THE STRUCTURE. A LOCAL ENGINEER MUST BE CONSULTED FOR PROPER FOOTING AND REINFORCEMENT SIZES.

5. CONTRACTOR TO ENSURE COMPARABILITY OF THE BUILDING WITH ALL SITE REQUIREMENTS.

6. REINFORCE FOUNDATION WALLS PER LOCAL CODES.

7. ALL FOUNDATION AND STRUCTURAL MEMBERS SHALL BE DESIGNED AND STAMPED BY AN ENGINEER. THE CONTRACTOR IS RESPONSIBLE FOR THE ADJUSTMENT AND VERIFICATION OF ALL STRUCTURAL DETAILS AND CONDITIONS TO MEET ALL LOCAL CODES AND TO INSURE A WELL CONSTRUCTED AND SAFE STRUCTURE.

8. ALL WOOD, CONCRETE AND STEEL STRUCTURAL MEMBERS ARE TO MEET NATIONAL, STATE AND LOCAL BUILDING CODES.

9. ALL COLUMNS OR SOLID FRAMING SHALL BE DESIGNED TO CARRY AND TERMINATE LOADS THROUGH THE STRUCTURE TO FOUNDATION ELEMENTS THAT DISTRIBUTE THE LOADS TO FULL CAPACITY SOILS.

10. J. WALKER/ONEZERONINE RESIDENTIAL DESIGNS LLC. ASSUMES NO LIABILITY FOR ANY HOME CONSTRUCTED FROM THIS PLAN.

11. THIS DESIGN LICENSE IS RELEASED FOR ONE (1) BUILT STRUCTURE ONLY AND IS NOT TRANSFERABLE TO ANOTHER INDIVIDUAL OR COMPANY.

12. ARCHITECTURAL DESIGN ASSUMES ENGINEERED FLOOR SYSTEM IS NOT TO EXCEED 14" IN DEPTH. ENGINEER SHALL RELATE FLOOR DEPTH TO STAIR DESIGN AND MODIFY ACCORDINGLY. NOTE: FLOOR SYSTEMS DEEPER THAN 14" IN DEPTH CAN ADVERSELY IMPACT FLOOR PLAN DESIGN.

13. THE DRAWINGS PREPARED BY J. WALKER/ ONEZERONINE RESIDENTIAL DESIGN LLC. ARE ARCHITECTURAL IN NATURE. STRUCTURAL DRAWINGS SHALL BE PREPARED BY A LOCAL ENGINEER PER LOCAL CODES.

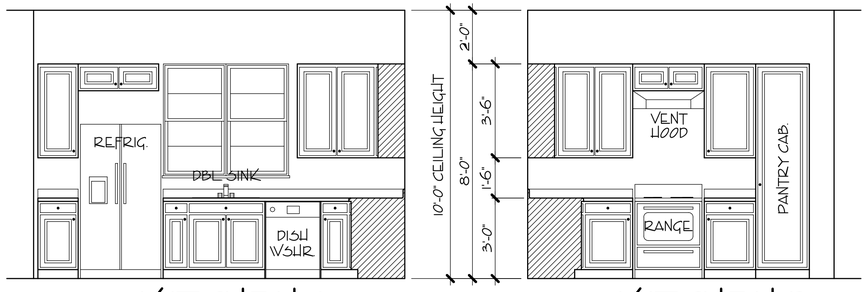

1 / D3 KITCHEN A
SCALE: 3/8" = 1'-0"

2 / D3 KITCHEN B
SCALE: 3/8" = 1'-0"

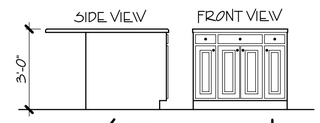

3 / D3 KIT. ISLAND
SCALE: 3/8" = 1'-0"

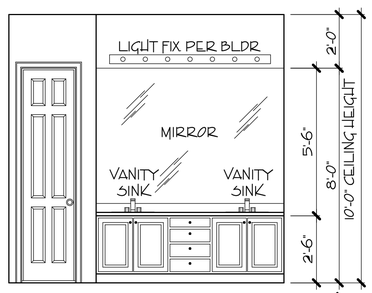

4 / D3 MASTER BATH
SCALE: 3/8" = 1'-0"

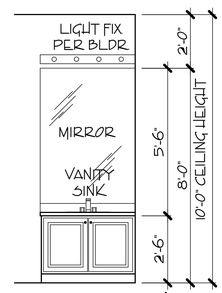

5 / D3 BATH 2
SCALE: 3/8" = 1'-0"

Village Park of Alpharetta

BUNGALOW CTG. OPT. 1

CABINET DETAILS

17-001

REV. NO	REV. DATE/INT.
1	3-27-18

12-05-17

DRAWN BY:	SHEET NO:
JBW	D3-2

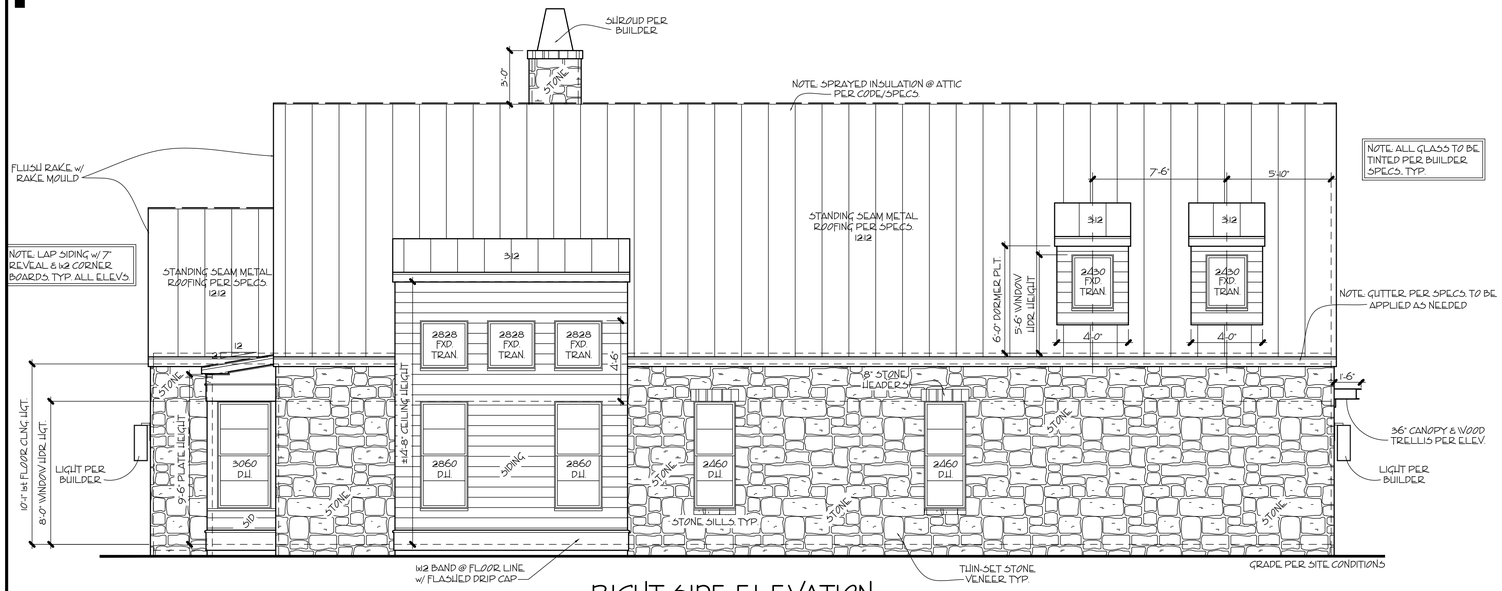

RIGHT SIDE ELEVATION

SCALE: 1/4" = 1'-0"

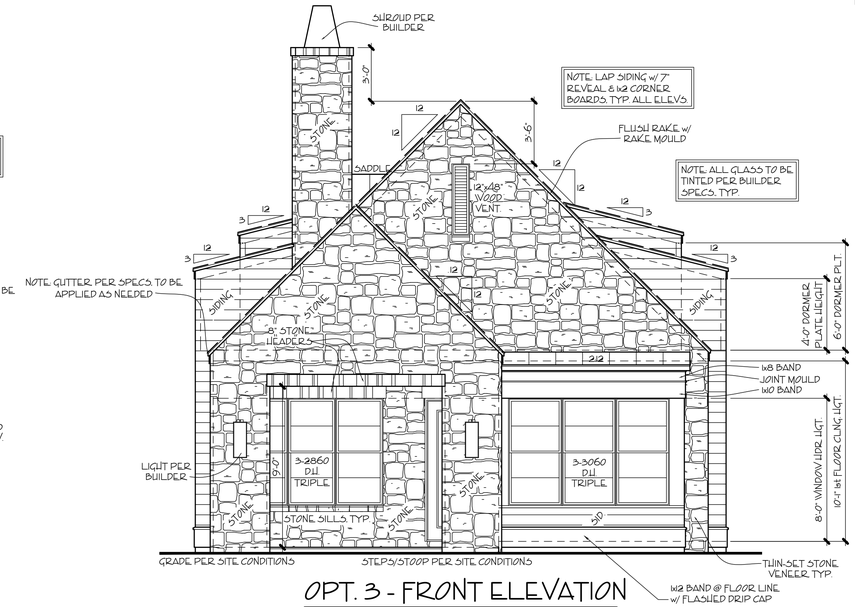

OPT. 3 - FRONT ELEVATION

SCALE: 1/4" = 1'-0"

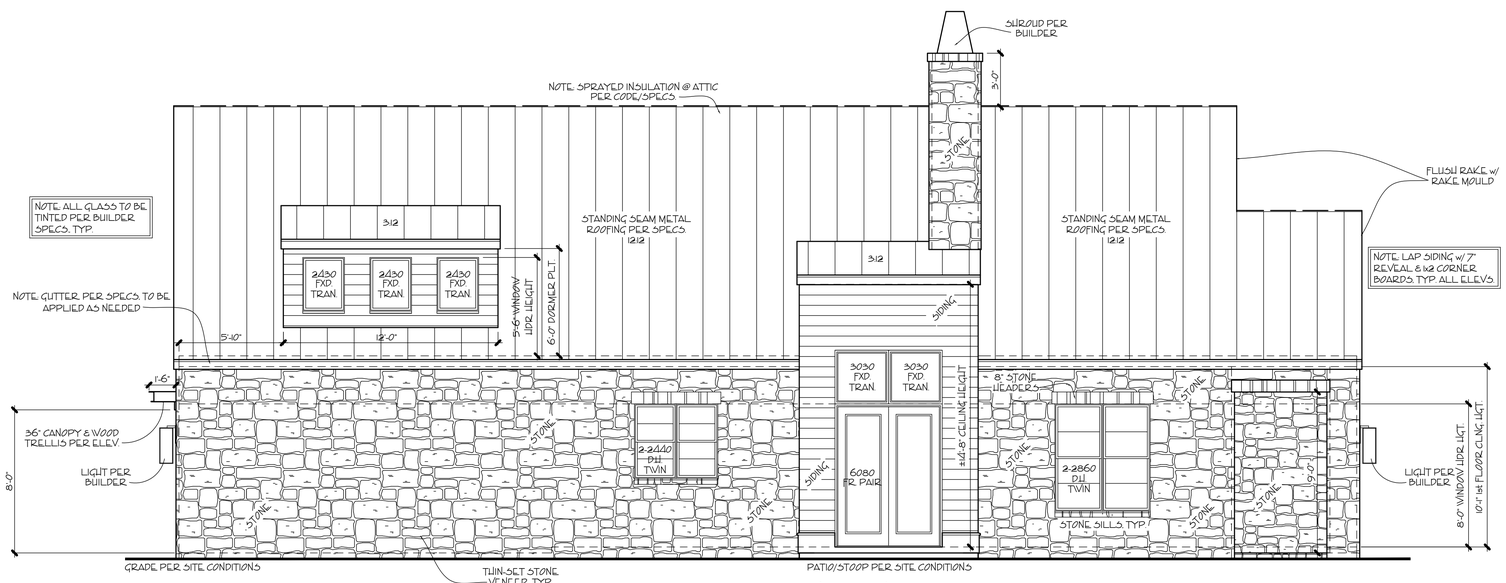

LEFT SIDE ELEVATION

SCALE: 1/4" = 1'-0"

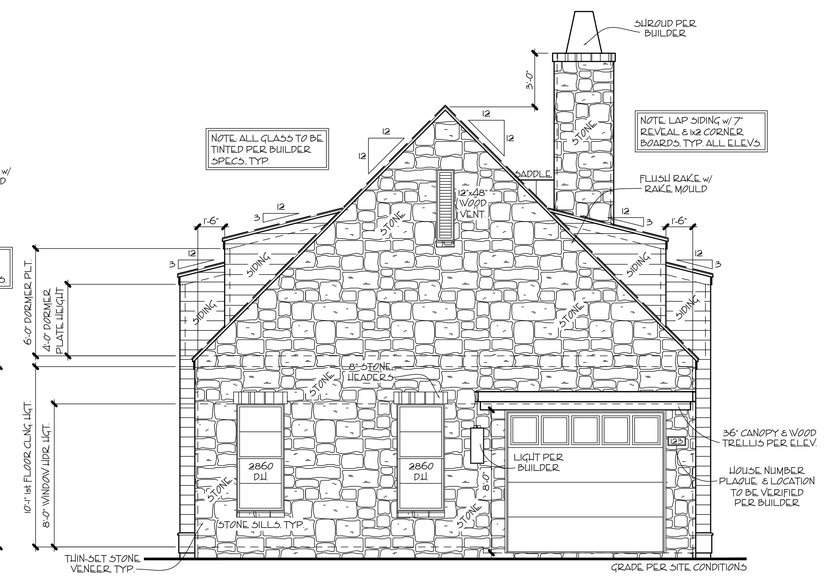

REAR ELEVATION

SCALE: 1/4" = 1'-0"

GENERAL NOTES

1. ALL WORK SHALL BE PERFORMED IN ACCORDANCE WITH ALL NATIONAL AND LOCAL CODES, REGULATIONS, AND LATEST ADOPTED INTERNATIONAL BUILDING CODE WITH CURRENT ADDENDUM.
2. CONTRACTOR SHALL VERIFY ALL CONDITIONS AND DIMENSIONS AT THE SITE BEFORE BEGINNING CONSTRUCTION. ANY DISCREPANCIES SHALL BE REPORTED TO J. WALKER/ONEZERONINE, RESIDENTIAL DESIGNS, LLC. FOR JUSTIFICATION/CORRECTION BEFORE PROCEEDING WITH THE WORK. CONTRACTOR SHALL ASSUME RESPONSIBILITY FOR ERRORS THAT ARE NOT REPORTED.
3. ALL DIMENSIONS SHALL BE READ OR CALCULATED AND NEVER SCALED.
4. ALL PORTIONS OF FOOTINGS ARE TO BE BELOW LOCAL FROST LINES AND MUST REST ON UNDISTURBED SOIL WITH ADEQUATE BEARING CAPACITY TO SUPPORT THE STRUCTURE. ALL FOOTINGS MUST BE POURED CONSULTED FOR PROPER FOOTING AND REINFORCEMENT SIZES.
5. CONTRACTOR TO ENSURE COMPARABILITY OF THE BUILDING WITH ALL SITE REQUIREMENTS.
6. REINFORCE FOUNDATION WALLS PER LOCAL CODES.
7. ALL FOUNDATION AND STRUCTURAL MEMBERS SHALL BE DESIGNED AND STAMPED BY AN ENGINEER. THE CONTRACTOR IS RESPONSIBLE FOR THE ADJUSTMENT AND VERIFICATION OF ALL STRUCTURAL DETAILS AND CONDITIONS TO MEET ALL LOCAL CODES AND TO ENSURE A WELL CONSTRUCTED AND SAFE STRUCTURE.
8. ALL WOOD, CONCRETE AND STEEL STRUCTURAL MEMBERS ARE TO MEET NATIONAL, STATE AND LOCAL BUILDING CODES.
9. ALL COLUMNS OR SOLID FRAMING SHALL BE DESIGNED TO CARRY AND TERMINATE LOADS THROUGH THE STRUCTURE TO FOUNDATION ELEMENTS THAT DISTRIBUTE THE LOADS TO THE SOIL CAPACITY SAFELY.
10. J. WALKER/ONEZERONINE RESIDENTIAL DESIGNS LLC. ASSUMES NO LIABILITY FOR ANY HOME CONSTRUCTED FROM THIS PLAN.
11. THIS DESIGN LICENSE IS RELEASED FOR ONE (1) BUILT STRUCTURE ONLY AND IS NOT TRANSFERABLE TO ANOTHER INDIVIDUAL OR COMPANY.
12. ARCHITECTURAL DESIGN ASSUMES ENGINEERED FLOOR SYSTEM IS NOT TO EXCEED 14" IN DEPTH. ENGINEER SHALL RELATE FLOOR DEPTH TO STAIR DESIGN AND MODIFY ACCORDINGLY. NOTE: FLOOR SYSTEMS DEEPER THAN 14" IN DEPTH CAN ADVERSELY IMPACT FLOOR PLAN DESIGN.
13. THE DRAWINGS PREPARED BY J. WALKER/ ONEZERONINE RESIDENTIAL DESIGN LLC. ARE ARCHITECTURAL IN NATURE. STRUCTURAL DRAWINGS SHALL BE PREPARED BY A LOCAL ENGINEER PER LOCAL CODES.

Village Park of Alpharetta

BUNGALOW CTG. OPT.3

ELEVATIONS

17-001

REV. NO	REV. DATE/INT.
1	3-27-18

12-05-17

DRAWN BY:	SHEET NO
JBW	E1-3

GENERAL NOTES

1. ALL WORK SHALL BE PERFORMED IN ACCORDANCE WITH ALL NATIONAL AND LOCAL CODES, REGULATIONS, AND LATEST CABO INTERNATIONAL BUILDING CODE WITH CURRENT ADDENDUM.

2. CONTRACTOR SHALL VERIFY ALL CONDITIONS AND DIMENSIONS AT THE SITE BEFORE BEGINNING CONSTRUCTION. ANY DISCREPANCIES SHALL BE REPORTED TO J. WALKER/ONEZERONINE RESIDENTIAL DESIGNS LLC. FOR JUSTIFICATION/CORRECTION BEFORE PROCEEDING WITH THE WORK. CONTRACTOR SHALL ASSUME RESPONSIBILITY FOR ERRORS THAT ARE NOT REPORTED.

3. ALL DIMENSIONS SHALL BE READ OR CALCULATED AND NEVER SCALED.

4. ALL PORTIONS OF FOOTINGS ARE TO BE BELOW LOCAL FROST LINES AND MUST REST ON UNDISTURBED SOIL WITH ADEQUATE BEARING CAPACITY TO SUPPORT THE STRUCTURE. A LOCAL ENGINEER MUST BE CONSULTED FOR PROPER FOOTING AND REINFORCEMENT SIZES.

5. CONTRACTOR TO ENSURE COMPARABILITY OF THE BUILDING WITH ALL SITE REQUIREMENTS.

6. REINFORCE FOUNDATION WALLS PER LOCAL CODES.

7. ALL FOUNDATION AND STRUCTURAL MEMBERS SHALL BE DESIGNED AND STAMPED BY AN ENGINEER. THE CONTRACTOR IS RESPONSIBLE FOR THE ADJUSTMENT AND VERIFICATION OF ALL STRUCTURAL DETAILS AND CONDITIONS TO MEET ALL LOCAL CODES AND TO INSURE A WELL CONSTRUCTED AND SAFE STRUCTURE.

8. ALL WOOD, CONCRETE AND STEEL STRUCTURAL MEMBERS ARE TO MEET NATIONAL, STATE AND LOCAL BUILDING CODES.

9. ALL COLUMNS OR SOLID FRAMING SHALL BE DESIGNED TO CARRY AND TERMINATE LOADS THROUGH THE STRUCTURE TO FOUNDATION ELEMENTS THAT DISTRIBUTE THE LOADS TO FULL CAPACITY SOILS.

10. J. WALKER/ONEZERONINE RESIDENTIAL DESIGNS LLC. ASSUMES NO LIABILITY FOR ANY HOME CONSTRUCTED FROM THIS PLAN.

11. THIS DESIGN LICENSE IS RELEASED FOR ONE (1) BUILT STRUCTURE ONLY AND IS NOT TRANSFERABLE TO ANOTHER INDIVIDUAL OR COMPANY.

12. ARCHITECTURAL DESIGN ASSUMES ENGINEERED FLOOR SYSTEM IS NOT TO EXCEED 14" IN DEPTH. ENGINEER SHALL RELATE FLOOR DEPTH TO STAIR DESIGN AND MODIFY ACCORDINGLY. NOTE: FLOOR SYSTEMS DEEPER THAN 14" IN DEPTH CAN ADVERSELY IMPACT FLOOR PLAN DESIGN.

13. THE DRAWINGS PREPARED BY J. WALKER/ ONEZERONINE RESIDENTIAL DESIGN LLC. ARE ARCHITECTURAL IN NATURE. STRUCTURAL DRAWINGS SHALL BE PREPARED BY A LOCAL ENGINEER PER LOCAL CODES.

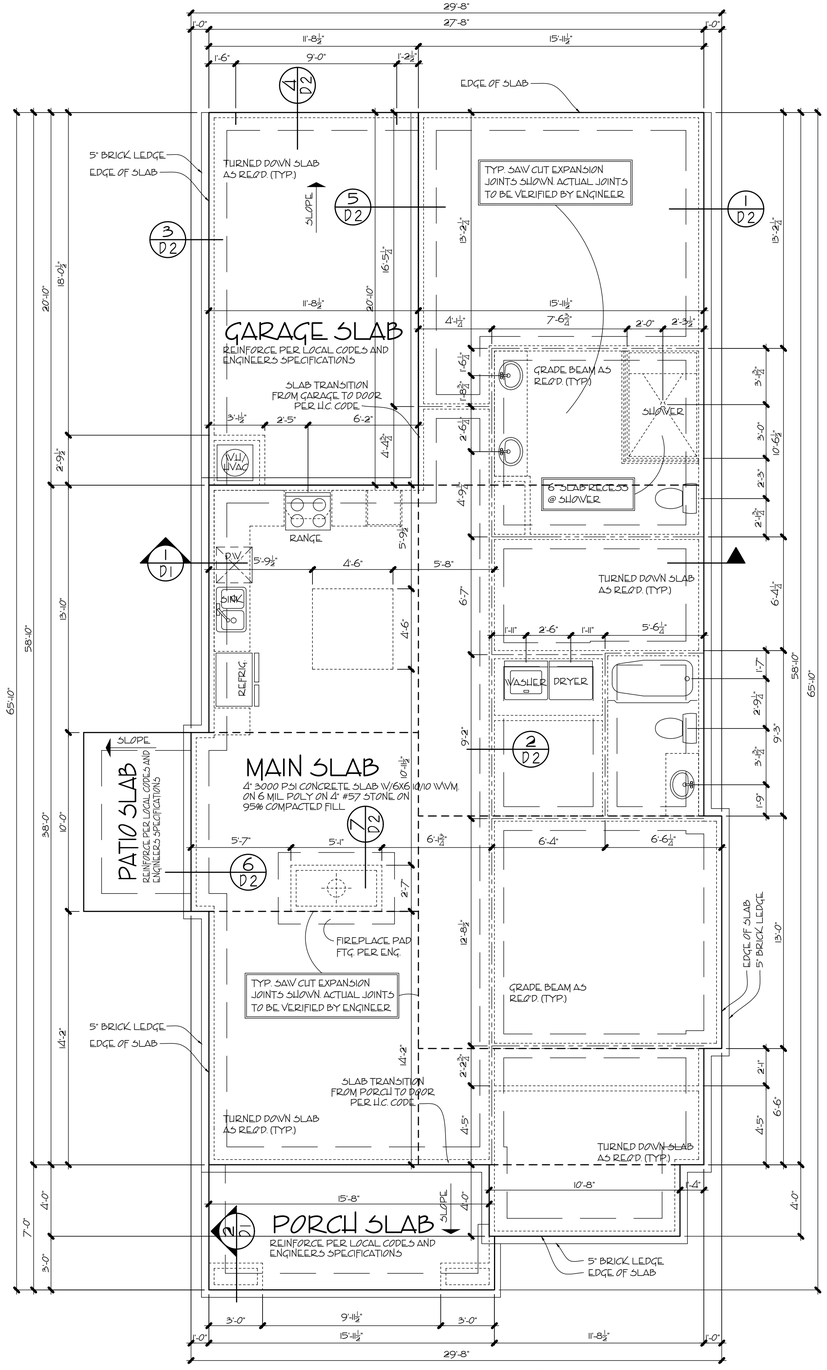

OPT. 3 - SLAB PLAN

SCALE: 1/4" = 1'-0"

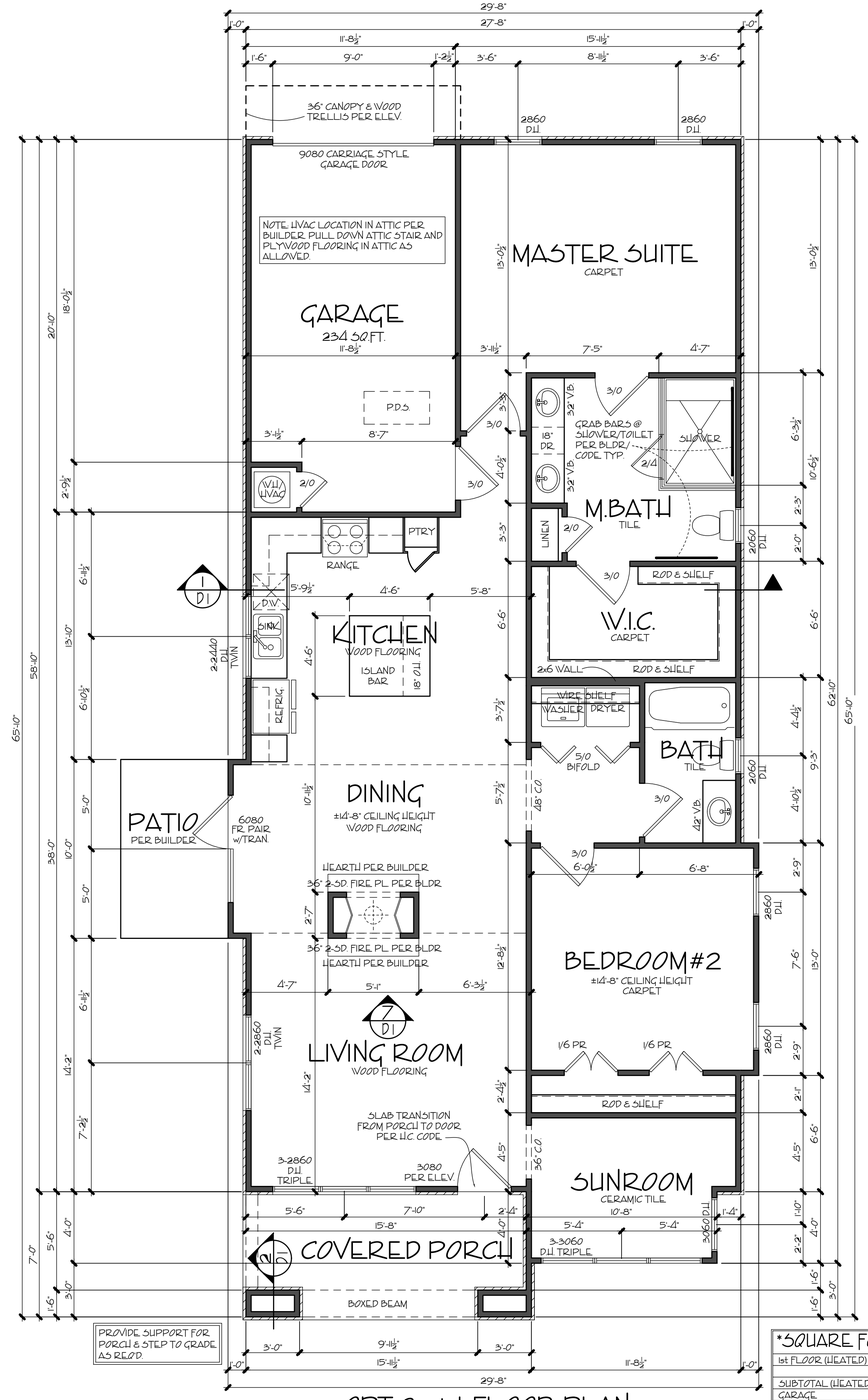

OPT. 3 - 1st FLOOR PLAN

SCALE: 1/4" = 1'-0"

*SQUARE FOOTAGES	
1st FLOOR (HEATED)	1,449 S.F.
SUBTOTAL (HEATED)	1,449 S.F.
GARAGE	244 S.F.
PORCH	111 S.F.
GROSS TOTAL	1,704 S.F.

*CALCULATED PER I.R.C. INDUSTRY STD. TO OUTSIDE FACE OF STUD
STAIRS & 2-STORY COUNTED ONCE.

Village Park of Alpharetta

BUNGALOW CTG. OPT. 3

1st FL. PLAN/SLAB PLAN

17-001

REV. NO.	REV. DATE/INT.
1	3-27-18

12-05-17

DRAWN BY:	SHEET NO.
JBW	A1-3

GENERAL NOTES

1. ALL WORK SHALL BE PERFORMED IN ACCORDANCE WITH ALL NATIONAL AND LOCAL CODES, REGULATIONS, AND LATEST CABO INTERNATIONAL BUILDING CODE WITH CURRENT ADDENDUM.

2. CONTRACTOR SHALL VERIFY ALL CONDITIONS AND DIMENSIONS AT THE SITE BEFORE BEGINNING CONSTRUCTION. ANY DISCREPANCIES SHALL BE REPORTED TO J. WALKER/ONEZERONINE, RESIDENTIAL DESIGNS LLC. FOR JUSTIFICATION/CORRECTION BEFORE PROCEEDING WITH THE WORK. CONTRACTOR SHALL ASSUME RESPONSIBILITY FOR ERRORS THAT ARE NOT REPORTED.

3. ALL DIMENSIONS SHALL BE READ OR CALCULATED AND NEVER SCALED.

4. ALL PORTIONS OF FOOTINGS ARE TO BE BELOW LOCAL FROST LINES AND MUST REST ON UNDISTURBED SOIL WITH ADEQUATE BEARING CAPACITY TO SUPPORT THE STRUCTURE. A LOCAL ENGINEER MUST BE CONSULTED FOR PROPER FOOTING AND REINFORCEMENT SIZES.

5. CONTRACTOR TO ENSURE COMPARABILITY OF THE BUILDING WITH ALL SITE REQUIREMENTS.

6. REINFORCE FOUNDATION WALLS PER LOCAL CODES.

7. ALL FOUNDATION AND STRUCTURAL MEMBERS SHALL BE DESIGNED AND STAMPED BY AN ENGINEER. THE CONTRACTOR IS RESPONSIBLE FOR THE ADJUSTMENT AND VERIFICATION OF ALL STRUCTURAL DETAILS AND CONDITIONS TO MEET ALL LOCAL CODES AND TO INSURE A WELL CONSTRUCTED AND SAFE STRUCTURE.

8. ALL WOOD, CONCRETE AND STEEL STRUCTURAL MEMBERS ARE TO MEET NATIONAL, STATE AND LOCAL BUILDING CODES.

9. ALL COLUMNS OR SOLID FRAMING SHALL BE DESIGNED TO CARRY AND TERMINATE LOADS THROUGH THE STRUCTURE TO FOUNDATION ELEMENTS THAT DISTRIBUTE THE LOADS TO FULL CAPACITY SOILS.

10. J. WALKER/ONEZERONINE RESIDENTIAL DESIGNS LLC. ASSUMES NO LIABILITY FOR ANY HOME CONSTRUCTED FROM THIS PLAN.

11. THIS DESIGN LICENSE IS RELEASED FOR ONE (1) BUILT STRUCTURE ONLY AND IS NOT TRANSFERABLE TO ANOTHER INDIVIDUAL OR COMPANY.

12. ARCHITECTURAL DESIGN ASSUMES ENGINEERED FLOOR SYSTEM IS NOT TO EXCEED 14" IN DEPTH. ENGINEER SHALL RELATE FLOOR DEPTH TO STAIR DESIGN AND MODIFY ACCORDINGLY. NOTE: FLOOR SYSTEMS DEEPER THAN 14" IN DEPTH CAN ADVERSELY IMPACT FLOOR PLAN DESIGN.

13. THE DRAWINGS PREPARED BY J. WALKER/ ONEZERONINE RESIDENTIAL DESIGN LLC. ARE ARCHITECTURAL IN NATURE. STRUCTURAL DRAWINGS SHALL BE PREPARED BY A LOCAL ENGINEER PER LOCAL CODES.

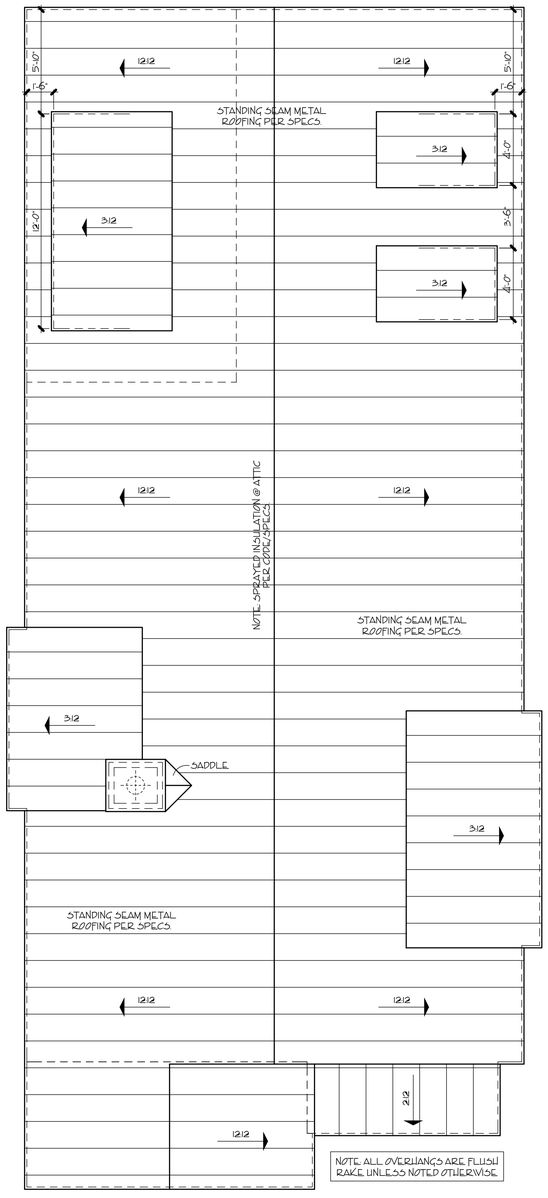

OPT. 3 - ROOF PLAN

SCALE: 1/4" = 1'-0"

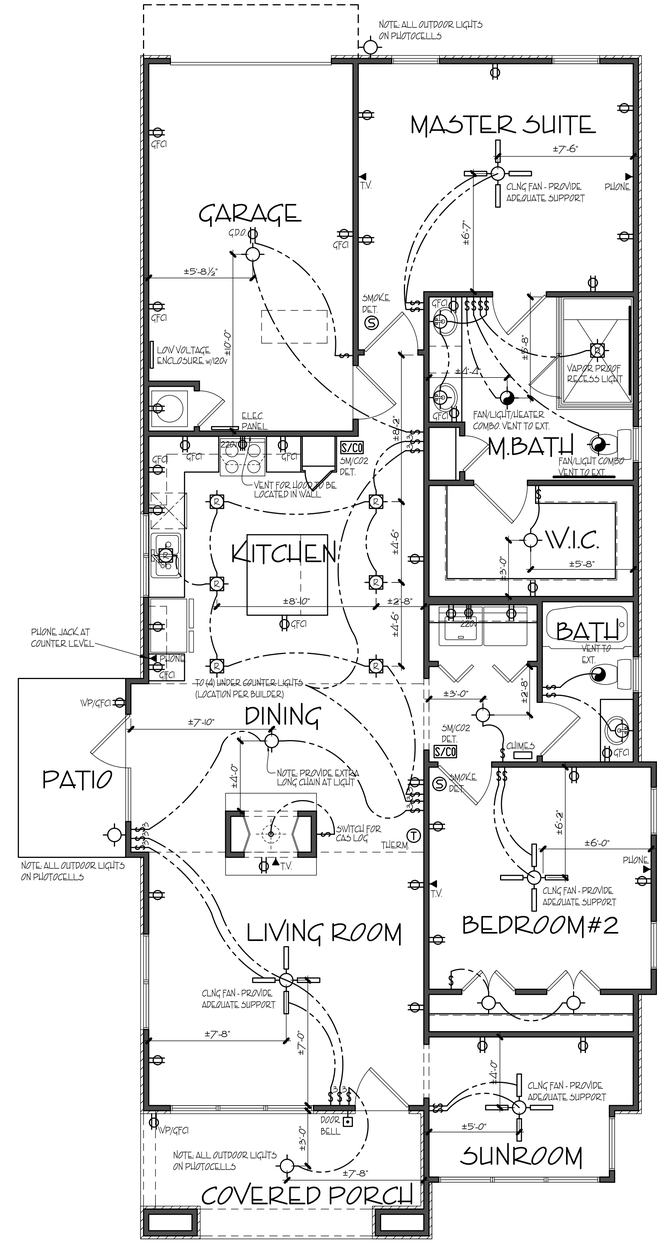

OPT. 3 - 1st FLOOR ELEC.

SCALE: 1/4" = 1'-0"

ELECTRICAL LEGEND	
SYMBOL	DESCRIPTION
	DUPLEX OUTLET (GROUNDED TYPE)
GFCI	DUPLEX OUTLET (GROUND FAULT CIRCUIT INTERUPT)
WP/GFCI	DUPLEX OUTLET (WEATHER PROOF/GROUND FAULT CIRCUIT INTERUPT)
220V	220 VOLT OUTLET
TV	TELEVISION ANTENNA/CABLE OUTLET
PHONE	TELEPHONE OUTLET LOCATION
CLINE	DOOR CLINE
	SINGLE POLE WALL SWITCH
3	3-WAY WALL SWITCH
4	4-WAY WALL SWITCH
	CEILING MOUNTED & SUSPENDED LIGHT FIXTURE
	WALL BRACKET MOUNTED LIGHT FIXTURE
	RECESSED CEILING LIGHT FIXTURE
DOUBLE FLOODS	DOUBLE FLOOD LIGHTS
S SMOKE DET.	SMOKE DETECTOR
S/CO SM/CO2 DET.	SMOKE/CARBON DETECTOR
T THERM	THERMOSTAT
GAS	GAS OUTLET
DOOR BELL	DOOR BELL
	CEILING MOUNTED EXHAUST FAN
	FAN/LIGHT COMBO
	CEILING MOUNTED FAN

Village Park of Alpharetta

BUNGALOW CTG. OPT. 3

ROOF PLAN/ELECTRICAL

17-001

REV. NO.	REV. DATE/INT.
1	3-27-18

12-05-17

DRAWN BY:	SHEET NO.
JBW	RF-3

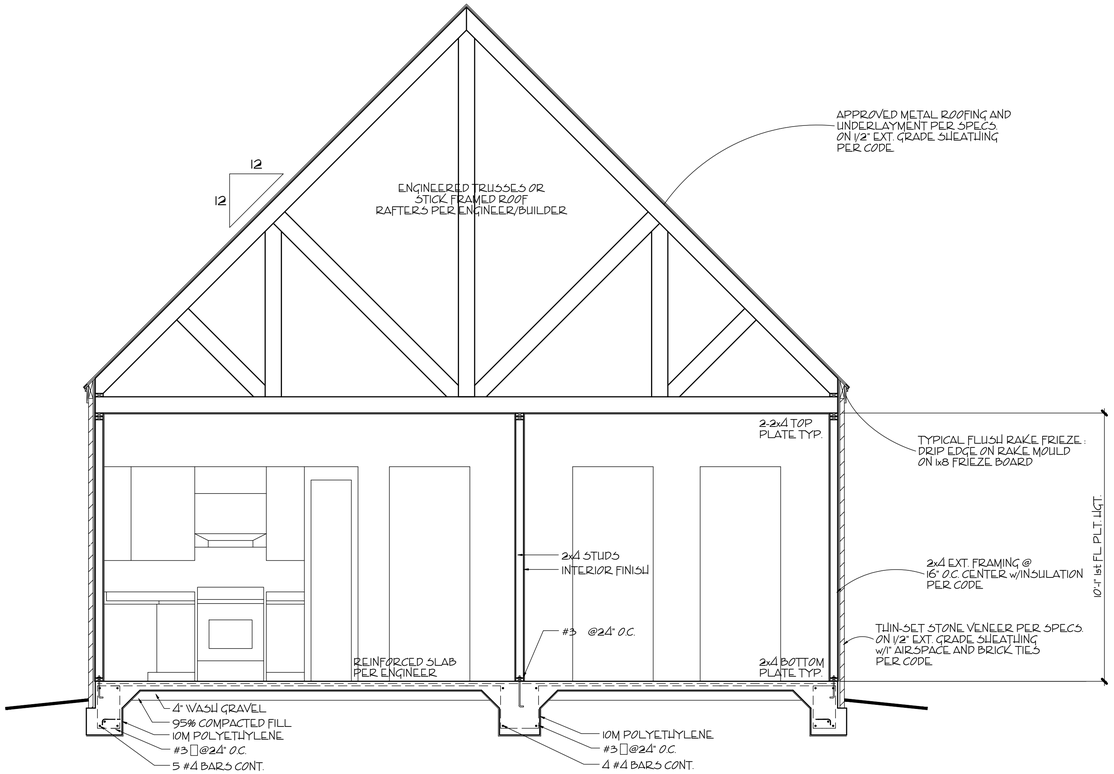

1 / D1 TYPICAL CROSS SECTION

SCALE: 3/8 = 1'-0"

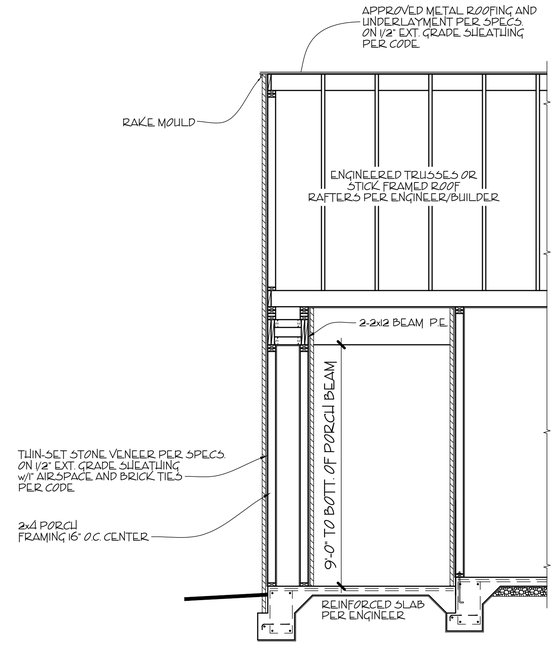

2 / D1 PORCH/COLUMN SECTION

SCALE: 3/8 = 1'-0"

GENERAL NOTES

1. ALL WORK SHALL BE PERFORMED IN ACCORDANCE WITH ALL NATIONAL AND LOCAL CODES, REGULATIONS, AND LATEST CABO INTERNATIONAL BUILDING CODE WITH CURRENT ADDENDUM.
2. CONTRACTOR SHALL VERIFY ALL CONDITIONS AND DIMENSIONS AT THE SITE BEFORE BEGINNING CONSTRUCTION. ANY DISCREPANCIES SHALL BE REPORTED TO J. WALKER/ONEZERONINE, RESIDENTIAL DESIGNS LLC. FOR JUSTIFICATION/CORRECTION BEFORE PROCEEDING WITH THE WORK. CONTRACTOR SHALL ASSUME RESPONSIBILITY FOR ERRORS THAT ARE NOT REPORTED.
3. ALL DIMENSIONS SHALL BE READ OR CALCULATED AND NEVER SCALED.
4. ALL PORTIONS OF FOOTINGS ARE TO BE BELOW LOCAL FROST LINES AND MUST REST ON UNDISTURBED SOIL WITH ADEQUATE BEARING CAPACITY TO SUPPORT THE STRUCTURE. A LOCAL ENGINEER MUST BE CONSULTED FOR PROPER FOOTING AND REINFORCEMENT SIZES.
5. CONTRACTOR TO ENSURE COMPARABILITY OF THE BUILDING WITH ALL SITE REQUIREMENTS.
6. REINFORCE FOUNDATION WALLS PER LOCAL CODES.
7. ALL FOUNDATION AND STRUCTURAL MEMBERS SHALL BE DESIGNED AND STAMPED BY AN ENGINEER. THE CONTRACTOR IS RESPONSIBLE FOR THE ADJUSTMENT AND VERIFICATION OF ALL STRUCTURAL DETAILS AND CONDITIONS TO MEET ALL LOCAL CODES AND TO INSURE A WELL CONSTRUCTED AND SAFE STRUCTURE.
8. ALL WOOD, CONCRETE AND STEEL STRUCTURAL MEMBERS ARE TO MEET NATIONAL, STATE AND LOCAL BUILDING CODES.
9. ALL COLUMNS OR SOLID FRAMING SHALL BE DESIGNED TO CARRY AND TERMINATE LOADS THROUGH THE STRUCTURE TO FOUNDATION ELEMENTS THAT DISTRIBUTE THE LOADS TO FULL CAPACITY SOILS.
10. J. WALKER/ONEZERONINE RESIDENTIAL DESIGNS LLC. ASSUMES NO LIABILITY FOR ANY HOME CONSTRUCTED FROM THIS PLAN.
11. THIS DESIGN LICENSE IS RELEASED FOR ONE (1) BUILT STRUCTURE ONLY AND IS NOT TRANSFERABLE TO ANOTHER INDIVIDUAL OR COMPANY.
12. ARCHITECTURAL DESIGN ASSUMES ENGINEERED FLOOR SYSTEM IS NOT TO EXCEED 14" IN DEPTH. ENGINEER SHALL RELATE FLOOR DEPTH TO STAIR DESIGN AND MODIFY ACCORDINGLY. NOTE: FLOOR SYSTEMS DEEPER THAN 14" IN DEPTH CAN ADVERSELY IMPACT FLOOR PLAN DESIGN.
13. THE DRAWINGS PREPARED BY J. WALKER/ ONEZERONINE RESIDENTIAL DESIGN LLC. ARE ARCHITECTURAL IN NATURE. STRUCTURAL DRAWINGS SHALL BE PREPARED BY A LOCAL ENGINEER PER LOCAL CODES.

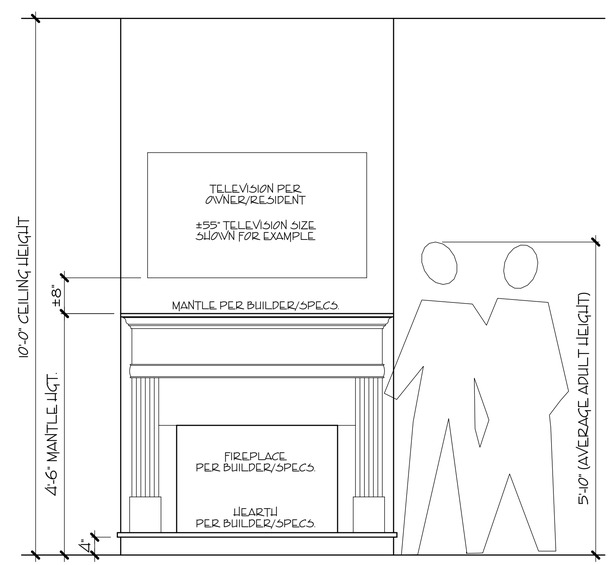

3 / D1 FIREPLACE ELEVATION

SCALE: 3/4" = 1'-0"

Village Park of Alpharetta

BUNGALOW CTG. OPT. 3

CROSS SECTIONS/DETAILS

17-001

REV. NO	REV. DATE/INT.
1	3-27-18

12-05-17

DRAWN BY:	SHEET NO:
JBW	D1-3

GENERAL NOTES

1. ALL WORK SHALL BE PERFORMED IN ACCORDANCE WITH ALL NATIONAL AND LOCAL CODES, REGULATIONS, AND LATEST CABO INTERNATIONAL BUILDING CODE WITH CURRENT ADDENDUM.

2. CONTRACTOR SHALL VERIFY ALL CONDITIONS AND DIMENSIONS AT THE SITE BEFORE BEGINNING CONSTRUCTION. ANY DISCREPANCIES SHALL BE REPORTED TO J. WALKER/ONEZERONINE, RESIDENTIAL DESIGNS LLC. FOR JUSTIFICATION/CORRECTION BEFORE PROCEEDING WITH THE WORK. CONTRACTOR SHALL ASSUME RESPONSIBILITY FOR ERRORS THAT ARE NOT REPORTED.

3. ALL DIMENSIONS SHALL BE READ OR CALCULATED AND NEVER SCALED.

4. ALL PORTIONS OF FOOTINGS ARE TO BE BELOW LOCAL FROST LINES AND MUST REST ON UNDISTURBED SOIL WITH ADEQUATE BEARING CAPACITY TO SUPPORT THE STRUCTURE. A LOCAL ENGINEER MUST BE CONSULTED FOR PROPER FOOTING AND REINFORCEMENT SIZES.

5. CONTRACTOR TO ENSURE COMPARABILITY OF THE BUILDING WITH ALL SITE REQUIREMENTS.

6. REINFORCE FOUNDATION WALLS PER LOCAL CODES.

7. ALL FOUNDATION AND STRUCTURAL MEMBERS SHALL BE DESIGNED AND STAMPED BY AN ENGINEER. THE CONTRACTOR IS RESPONSIBLE FOR THE ADJUSTMENT AND VERIFICATION OF ALL STRUCTURAL DETAILS AND CONDITIONS TO MEET ALL LOCAL CODES AND TO INSURE A WELL CONSTRUCTED AND SAFE STRUCTURE.

8. ALL WOOD, CONCRETE AND STEEL STRUCTURAL MEMBERS ARE TO MEET NATIONAL, STATE AND LOCAL BUILDING CODES.

9. ALL COLUMNS OR SOLID FRAMING SHALL BE DESIGNED TO CARRY AND TERMINATE LOADS THROUGH THE STRUCTURE TO FOUNDATION ELEMENTS THAT DISTRIBUTE THE LOADS TO FULL CAPACITY SOILS.

10. J. WALKER/ONEZERONINE RESIDENTIAL DESIGNS LLC. ASSUMES NO LIABILITY FOR ANY HOME CONSTRUCTED FROM THIS PLAN.

11. THIS DESIGN LICENSE IS RELEASED FOR ONE (1) BUILT STRUCTURE ONLY AND IS NOT TRANSFERABLE TO ANOTHER INDIVIDUAL OR COMPANY.

12. ARCHITECTURAL DESIGN ASSUMES ENGINEERED FLOOR SYSTEM IS NOT TO EXCEED 14" IN DEPTH. ENGINEER SHALL RELATE FLOOR DEPTH TO STAIR DESIGN AND MODIFY ACCORDINGLY. NOTE: FLOOR SYSTEMS DEEPER THAN 14" IN DEPTH CAN ADVERSELY IMPACT FLOOR PLAN DESIGN.

13. THE DRAWINGS PREPARED BY J. WALKER/ ONEZERONINE RESIDENTIAL DESIGN LLC. ARE ARCHITECTURAL IN NATURE. STRUCTURAL DRAWINGS SHALL BE PREPARED BY A LOCAL ENGINEER PER LOCAL CODES.

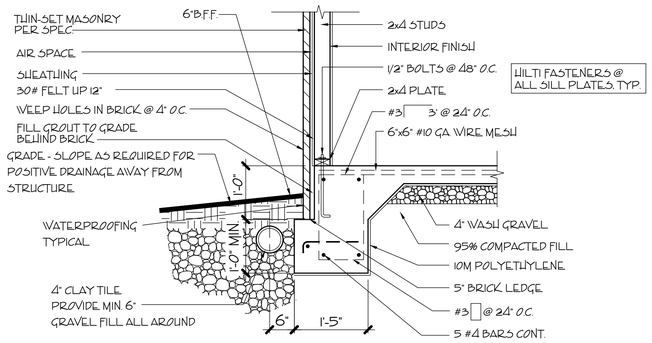

1 / D2 EXTERNAL TURN-DOWN SLAB w/MASONRY

SCALE: 1/2" = 1'-0"

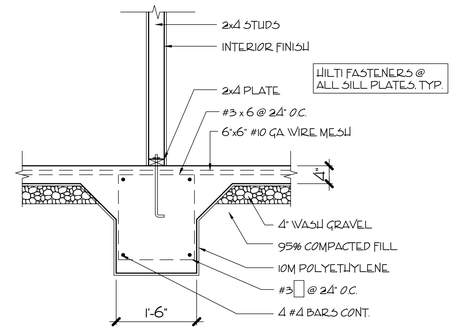

2 / D2 INTERNAL GRADE BEAM

SCALE: 1/2" = 1'-0"

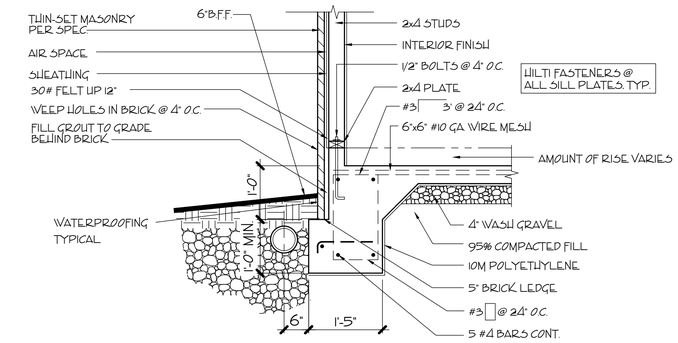

3 / D2 EXT. TURN-DOWN SLAB w/MASONRY (@ GARAGE WALL)

SCALE: 1/2" = 1'-0"

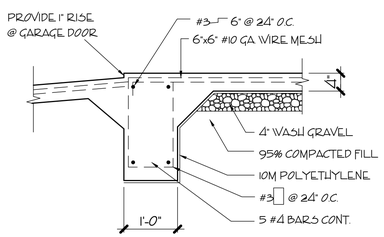

4 / D2 MONOLITHIC GARAGE SLAB (@ GARAGE DOOR)

SCALE: 1/2" = 1'-0"

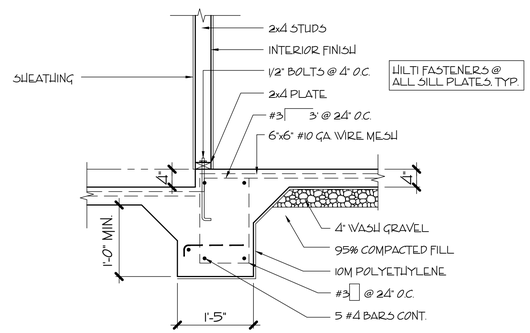

5 / D2 STEPPED DOWN SLAB @ GARAGE

SCALE: 1/2" = 1'-0"

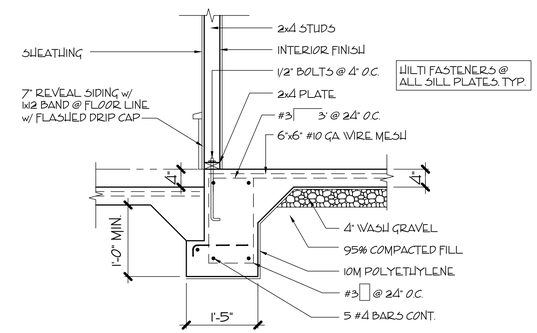

6 / D2 SLAB TO PATIO TRANSITION

SCALE: 1/2" = 1'-0"

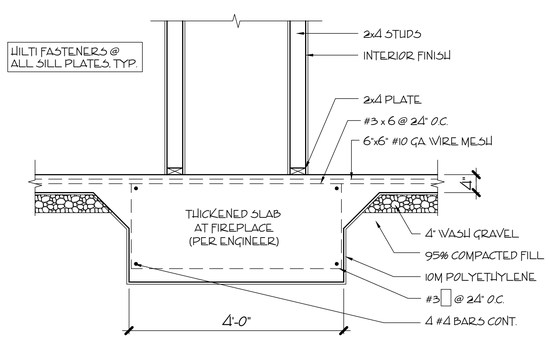

7 / D2 FIREPLACE/SLAB SECTION

SCALE: 1/2" = 1'-0"

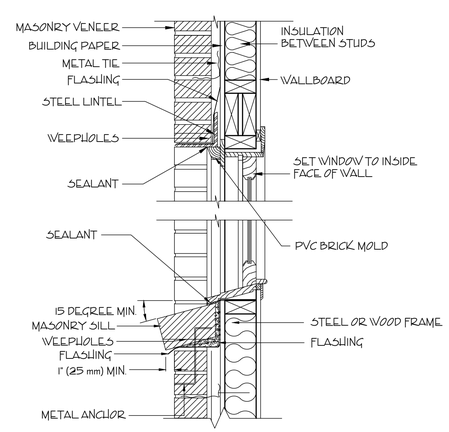

8 / D2 WINDOW/SILL SECTION

SCALE: 1/2" = 1'-0"

Village Park of Alpharetta

BUNGALOW CTG. OPT. 3

DETAILS

17-001

REV. NO	REV. DATE/INT.
1	3.27.18

12-05-17

DRAWN BY:	SHEET NO:
JBW	D2-3

GENERAL NOTES

1. ALL WORK SHALL BE PERFORMED IN ACCORDANCE WITH ALL NATIONAL AND LOCAL CODES, REGULATIONS, AND LATEST CABO INTERNATIONAL BUILDING CODE WITH CURRENT ADDENDUM.

2. CONTRACTOR SHALL VERIFY ALL CONDITIONS AND DIMENSIONS AT THE SITE BEFORE BEGINNING CONSTRUCTION. ANY DISCREPANCIES SHALL BE REPORTED TO J. WALKER/ONEZERONINE, RESIDENTIAL DESIGNS LLC. FOR JUSTIFICATION/CORRECTION BEFORE PROCEEDING WITH THE WORK. CONTRACTOR SHALL ASSUME RESPONSIBILITY FOR ERRORS THAT ARE NOT REPORTED.

3. ALL DIMENSIONS SHALL BE READ OR CALCULATED AND NEVER SCALED.

4. ALL PORTIONS OF FOOTINGS ARE TO BE BELOW LOCAL FROST LINES AND MUST REST ON UNDISTURBED SOIL WITH ADEQUATE BEARING CAPACITY TO SUPPORT THE STRUCTURE. A LOCAL ENGINEER MUST BE CONSULTED FOR PROPER FOOTING AND REINFORCEMENT SIZES.

5. CONTRACTOR TO ENSURE COMPARABILITY OF THE BUILDING WITH ALL SITE REQUIREMENTS.

6. REINFORCE FOUNDATION WALLS PER LOCAL CODES.

7. ALL FOUNDATION AND STRUCTURAL MEMBERS SHALL BE DESIGNED AND STAMPED BY AN ENGINEER. THE CONTRACTOR IS RESPONSIBLE FOR THE ADJUSTMENT AND VERIFICATION OF ALL STRUCTURAL DETAILS AND CONDITIONS TO MEET ALL LOCAL CODES AND TO INSURE A WELL CONSTRUCTED AND SAFE STRUCTURE.

8. ALL WOOD, CONCRETE AND STEEL STRUCTURAL MEMBERS ARE TO MEET NATIONAL, STATE AND LOCAL BUILDING CODES.

9. ALL COLUMNS OR SOLID FRAMING SHALL BE DESIGNED TO CARRY AND TERMINATE LOADS THROUGH THE STRUCTURE TO FOUNDATION ELEMENTS THAT DISTRIBUTE THE LOADS TO FULL CAPACITY SOILS.

10. J. WALKER/ONEZERONINE RESIDENTIAL DESIGNS LLC. ASSUMES NO LIABILITY FOR ANY HOME CONSTRUCTED FROM THIS PLAN.

11. THIS DESIGN LICENSE IS RELEASED FOR ONE (1) BUILT STRUCTURE ONLY AND IS NOT TRANSFERABLE TO ANOTHER INDIVIDUAL OR COMPANY.

12. ARCHITECTURAL DESIGN ASSUMES ENGINEERED FLOOR SYSTEM IS NOT TO EXCEED 14" IN DEPTH. ENGINEER SHALL RELATE FLOOR DEPTH TO STAIR DESIGN AND MODIFY ACCORDINGLY. NOTE: FLOOR SYSTEMS DEEPER THAN 14" IN DEPTH CAN ADVERSELY IMPACT FLOOR PLAN DESIGN.

13. THE DRAWINGS PREPARED BY J. WALKER/ ONEZERONINE RESIDENTIAL DESIGN LLC. ARE ARCHITECTURAL IN NATURE. STRUCTURAL DRAWINGS SHALL BE PREPARED BY A LOCAL ENGINEER PER LOCAL CODES.

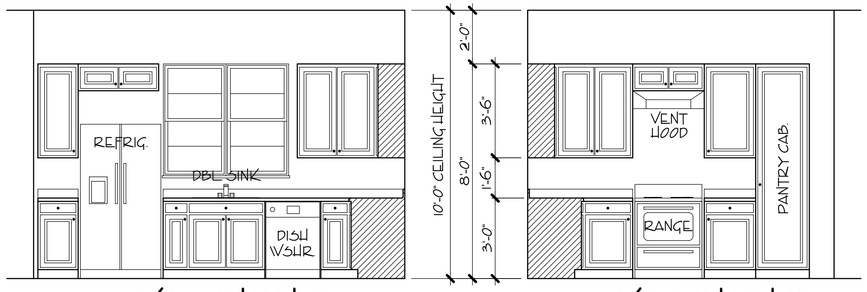

1 / D3 KITCHEN A
SCALE: 3/8" = 1'-0"

2 / D3 KITCHEN B
SCALE: 3/8" = 1'-0"

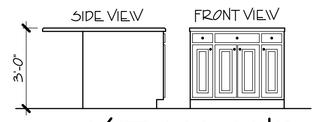

3 / D3 KIT. ISLAND
SCALE: 3/8" = 1'-0"

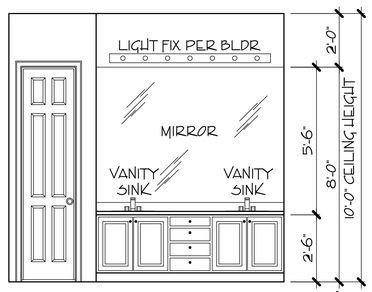

4 / D3 MASTER BATH
SCALE: 3/8" = 1'-0"

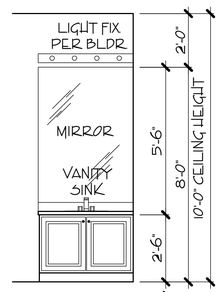

5 / D3 BATH 2
SCALE: 3/8" = 1'-0"

Village Park of Alpharetta

BUNGALOW CTG. OPT. 1

CABINET DETAILS

17-001

REV. NO	REV. DATE/INT.
1	3-27-18

12-05-17

DRAWN BY:	SHEET NO:
JBW	D3-3

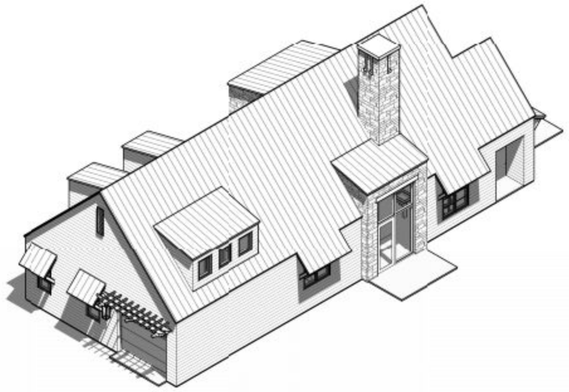

ISOMETRIC REAR - OPTION 1

REAR PERSPECTIVE - OPTION 1

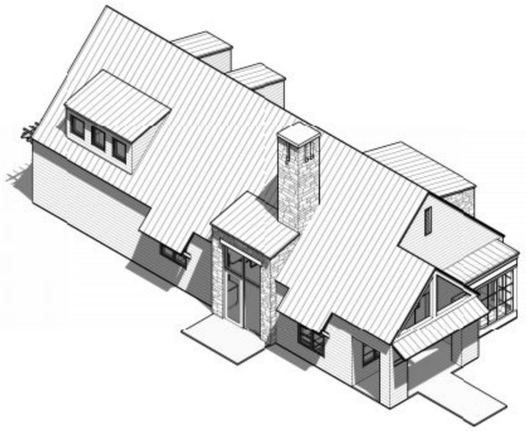

ISOMETRIC FRONT 2 - OPTION 1

FRONT PERSPECTIVE 2 - OPTION 1

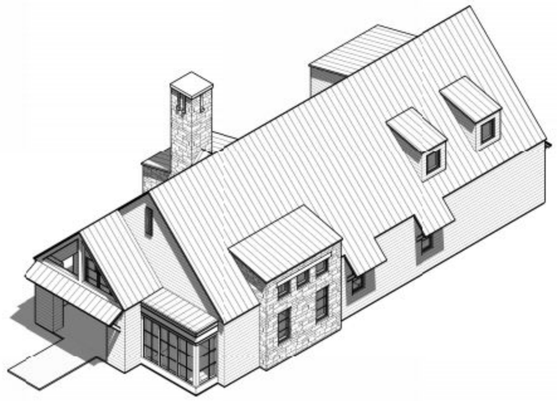

ISOMETRIC FRONT 1 - OPTION 1

FRONT PERSPECTIVE 1 - OPTION 1

NO.	DATE	DESCRIPTION

VILLAGE PARK - WILLS RD BUNGALOW COTTAGE

WILLS RD
ALPHARETTA, GA
30009

THW
DESIGN

COPYRIGHT © 2017
THOMPSON HANCOCK WITTE & ASSOCIATES, INC.

2100 RiverEdge Parkway
Suite 900
Atlanta, GA 30328

2632 Broadway Street
Suite 201, South Building
San Antonio, TX 78215

PH: 770 916 2220
FAX: 770 916 2299

www.thw.com

PRELIMINARY DRAWINGS. NOT TO BE USED FOR RECORDING, IMPLEMENTATION, REGULATORY APPROVAL, PERMITTING, OR CONSTRUCTION.

SCHEMATIC DESIGN

Project No.: 2017050
Date: 9-29-2017

ISOMETRIC & PERSPECTIVE - OPTION 1

A-911-B

C:\THWFILES\Revit Local Files\2017\2017050_Village Park_BUNGALOW_COTTAGES_ARCH_R17_SD.rvt

11/9/2017 9:18:37 AM

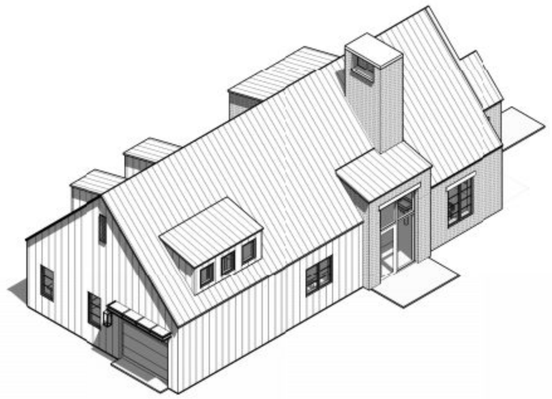

ISOMETRIC REAR - OPTION 2

REAR PERSPECTIVE - OPTION 2

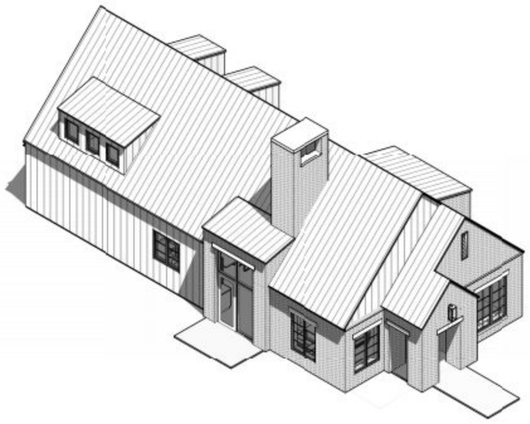

ISOMETRIC FRONT 2 - OPTION 2

FRONT PERSPECTIVE 2 - OPTION 2

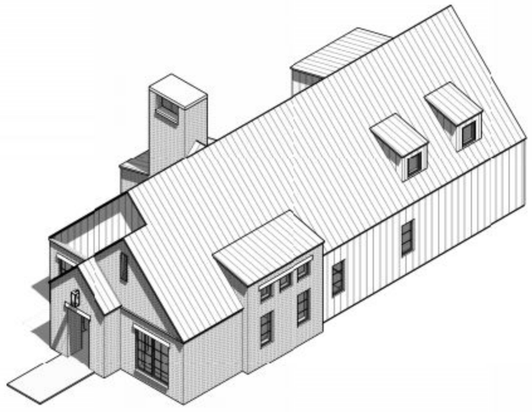

ISOMETRIC FRONT 1 - OPTION 2

FRONT PERSPECTIVE 1 - OPTION 2

NO.	DATE	DESCRIPTION

VILLAGE PARK - WILLS RD BUNGALOW COTTAGE

WILLS RD
ALPHARETTA, GA
30009

THW
DESIGN

COPYRIGHT © 2017
THOMPSON HANCOCK WITTE & ASSOCIATES, INC.

2100 RiverEdge Parkway
Suite 900
Atlanta, GA 30328

2632 Broadway Street
Suite 201, South Building
San Antonio, TX 78215

PH: 770 916 2220
FAX: 770 916 2299

www.thw.com

PRELIMINARY DRAWINGS. NOT TO BE USED FOR RECORDING, IMPLEMENTATION, REGULATORY APPROVAL, PERMITTING, OR CONSTRUCTION.

SCHEMATIC DESIGN

Project No.: 2017050
Date: 9-29-2017

ISOMETRIC & PERSPECTIVE - OPTION 2

A-912-B

C:\THWFILES\Revit Local Files\2017\2017050_Village Park_BUNGALOW_COTTAGES_ARCH_R17_SD.rvt

11/9/2017 9:19:00 AM

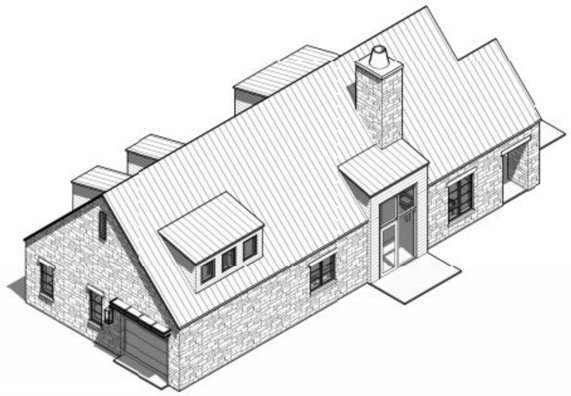

ISOMETRIC REAR - OPTION 3

REAR PERSPECTIVE - OPTION 3

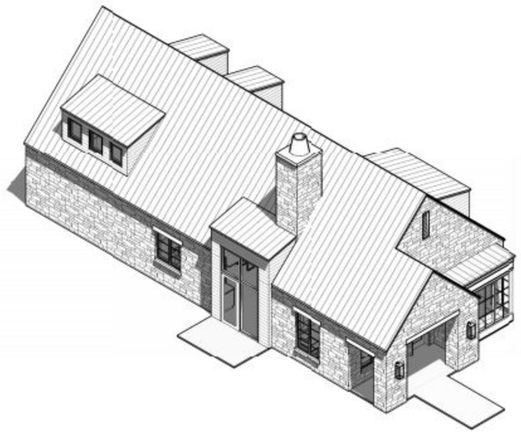

ISOMETRIC FRONT 2 - OPTION 3

FRONT PERSPECTIVE 2 - OPTION 3

ISOMETRIC FRONT 1 - OPTION 3

FRONT PERSPECTIVE 1 - OPTION 3

NO.	DATE	DESCRIPTION

VILLAGE PARK - WILLS RD BUNGALOW COTTAGE

WILLS RD
ALPHARETTA, GA
30009

THW
DESIGN

COPYRIGHT © 2017
THOMPSON HANCOCK WITTE & ASSOCIATES, INC.

2100 RiverEdge Parkway
Suite 900
Atlanta, GA 30328

2632 Broadway Street
Suite 201, South Building
San Antonio, TX 78215

PH: 770 916 2220
FAX: 770 916 2299

www.thw.com

PRELIMINARY DRAWINGS. NOT TO BE USED FOR RECORDING, IMPLEMENTATION, REGULATORY APPROVAL, PERMITTING, OR CONSTRUCTION.

SCHEMATIC DESIGN

Project No.: 2017050
Date: 9-29-2017

ISOMETRIC & PERSPECTIVE - OPTION 3

A-913-B

C:\THWFILES\Revit Local Files\2017\2017050_Village Park_BUNGALOW_COTTAGES_ARCH_R17_SD.rvt

11/9/2017 9:19:25 AM

CITY OF ALPHARETTA

DESIGN REVIEW BOARD APPLICATION

Property Owner Information:

Property Owner Name: VPM2 LLC

Physical Address: 3424 Peachtree Rd NE Ste 1780

Mailing Address:

City: ATLANTA State: GA Zip Code: 30326 -

Owner Telephone: 404 - 271 - 8403 Contact Fax: - -

Property Owner Authorization *(Must be completed if the applicant is not the legal owner of the subject property).*

I, the undersigned, do hereby swear and attest, under penalty of law for false swearing, that I am the legal owner, as shown in the records of Fulton County, Georgia, of the property described herein and that I authorize the person identified herein as "Applicant" to act on my behalf in pursuit of this request.

Owner Name (Printed): BRYAN HENDERSON Date: 12/2/2021

Owner Signature:

Property Information:

Address (If Assigned) : 555 Wills Road

Tax ID or Map Reference Number: 12-2340060005 66

Land Lot(s): 60 District: 1st Section:

Existing Zoning of Property: Existing Uses of Property: MERCANTILE

This form is to be executed under oath. I, the person identified herein as "Applicant," do solemnly swear and attest, subject to criminal penalties for false swearing, that the information provided in this Design Review Board Application is true and correct and contains no misleading information. I also understand that Design Review Board review and/or approval does not include review or approval for code compliance and that City of Alpharetta site and building plan review staff should be contacted with respect to code compliance issues and permitting procedures.

Applicant Signature: Date:

Print Form

CITY OF ALPHARETTA

DESIGN REVIEW BOARD APPLICATION

FOR OFFICE USE ONLY

Case DRB: _____

☐ Fee Paid Initial: _____

For your convenience, this form may be completed electronically and printed upon completion. If you choose to handwrite your responses, please print in a clear, easily legible fashion.

Please complete this form and the submittal package in its entirety. *See Page 2 "Instructions and Required Materials" for details.* Lastly, verify that all information is true and accurate.

Your completed submittal package should be delivered to:

City of Alpharetta
2 Park Plaza
Alpharetta, GA 30009

NOTE: All applicable fees must be included with the application. Please note that a 3% convenience fee will be added to all credit card transactions. Applications will be accepted only on the dates reflected on the page of this form titled "Filing Deadlines and Meeting Schedule" and only between the hours of 8:30 AM and 3:30 PM.

If you have questions regarding this application or the design review process, please contact Bret Schroeder by calling 678-297-6088.

Business Name: VPM2 LLC

Location Address: 555 WILLS RD. ALPHARETTA GA

Mailing Address: 3424 PEACHTREE ROAD, SUITE 1780

City: ATLANTA State: GA Zip Code: 30326 -

Contact For All Notifications: BRYAN HENDERSON

Contact Telephone: 404 - 271 - 8403 Mobile Telephone: 404 - 271 - 8403

Fax: - - Email: BRYAN@GALERIELIVING.COM

Contact's Relation To Business: OWNER'S REPRESENTATIVE

This Application For (Check all that apply):

- ☐ Addition
- ☐ Modification to Exterior
- ☐ Auxiliary Structure
- ☒ New Construction
- ☐ Color Selection
- ☐ Signage
- ☐ Material Selection

This page will be the first page of your completed submittal packet.

Application Fees:

Any sign or remodel review within the Downtown Overlay	$	175.00
All other reviews	$	300.00
Total Due		_____

DESIGN REVIEW BOARD REVIEW CRITERIA

How will this proposal be visually compatible with the character of the surrounding areas?

Matches adjacent building in phase 1

In your submittal package, have you included a site line study from the public right of way, which shows the location of rooftop structures? If not, please explain below.

☐ Yes

☒ No

No Roof top structures proposed

STANDING SEAM METAL ROOF:
BERRIDGE; ZINC-COTE

SIDING/TRIM PAINT COLOR:
SW 7656 RHINESTONE

WINDOW/STOREFRONT COLOR:
BLACK

STONE:
NCS; COUNTRY VILLA, GRANITE

BUNGALOW COTTAGE 1 - NO CHIMNEY
PALETTE 1

STANDING SEAM METAL ROOF:
BERRIDGE; ZINC-COTE

SIDING/TRIM PAINT COLOR:
SW 7656 RHINESTONE

WINDOW/STOREFRONT COLOR:
BLACK

STONE:
NCS; COUNTRY VILLA, GRANITE

BUNGALOW COTTAGE 2
PALETTE 2

STANDING SEAM METAL ROOF:
BERRIDGE; ZINC-COTE

SIDING/TRIM PAINT COLOR:
SW 7656 RHINESTONE

WINDOW/STOREFRONT COLOR:
BLACK

STONE:
NCS; COUNTRY VILLA, GRANITE

BUNGALOW COTTAGE 3
PALETTE 3

STANDING SEAM METAL ROOF:
BERRIDGE; ZINC-COTE

SIDING/TRIM PAINT COLOR:
SW 7656 RHINESTONE

WINDOW/STOREFRONT COLOR:
BLACK

STONE:
NCS; COUNTRY VILLA, GRANITE

STUDIO COTTAGE
PALETTE 2

STANDING SEAM METAL ROOF:
BERRIDGE; ZINC-COTE

SIDING/TRIM PAINT COLOR:
SW 7656 RHINESTONE

WINDOW/STOREFRONT COLOR:
BLACK

STONE:
NCS; COUNTRY VILLA, GRANITE

DUPLEX COTTAGE 2
PALETTE 3

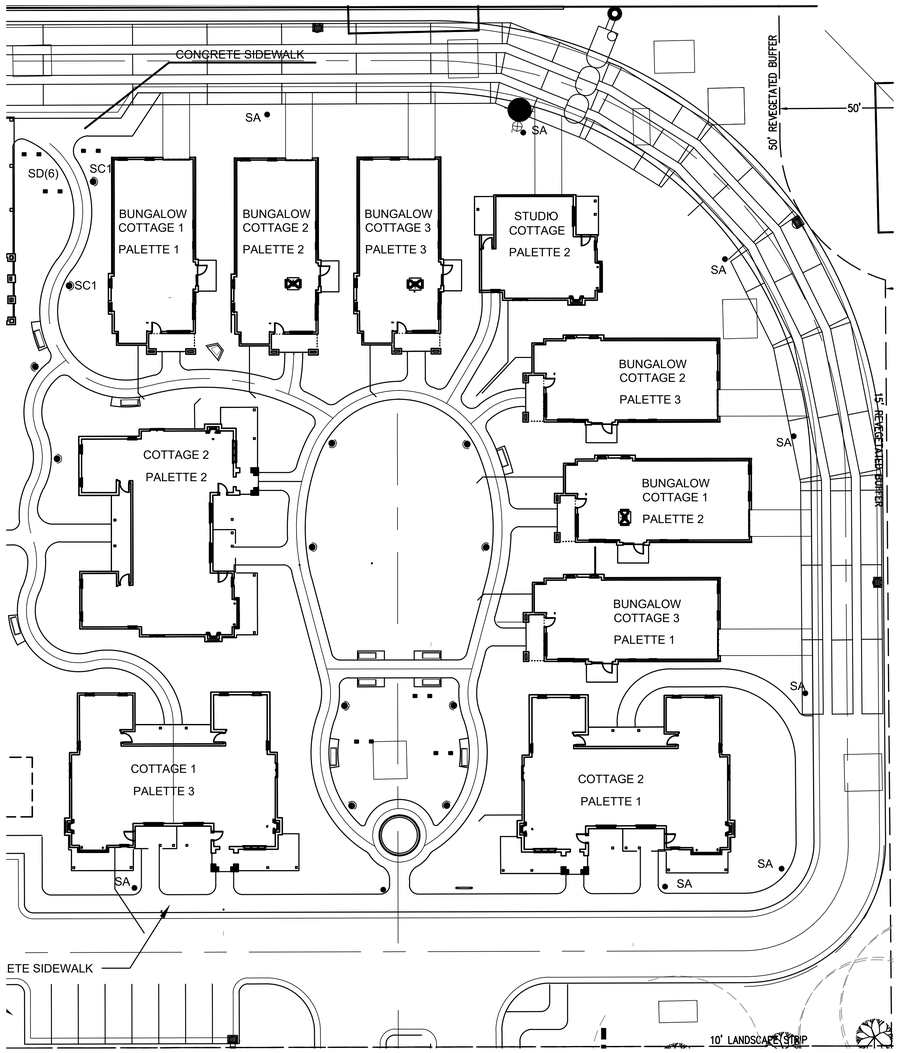

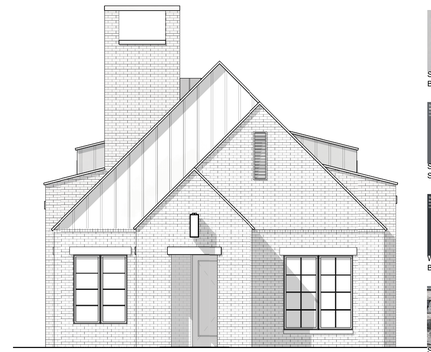

STANDING SEAM METAL ROOF:
BERRIDGE; ZINC-COTE

SIDING/TRIM PAINT COLOR:
SW 7656 RHINESTONE

WINDOW/STOREFRONT COLOR:
BLACK

STONE:
NCS; COUNTRY VILLA, GRANITE

BUNGALOW COTTAGE 2 - NO CHIMNEY
PALETTE 3

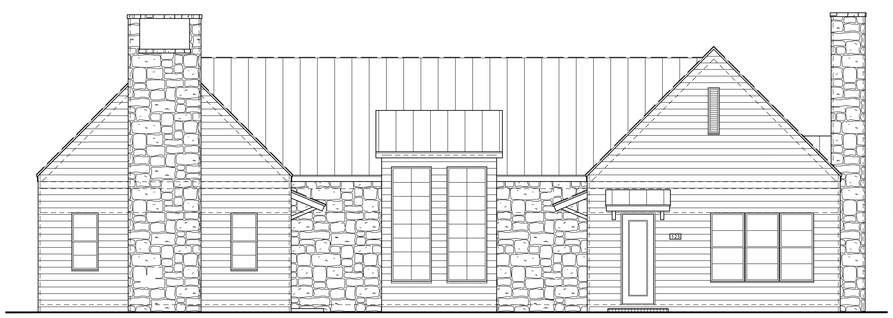

STANDING SEAM METAL ROOF:
BERRIDGE; ZINC-COTE

SIDING/TRIM PAINT COLOR:
SW 7656 RHINESTONE

WINDOW/STOREFRONT COLOR:
BLACK

STONE:
NCS; COUNTRY VILLA, GRANITE

DUPLEX COTTAGE 1
PALETTE 2

STANDING SEAM METAL ROOF:
BERRIDGE; ZINC-COTE

SIDING/TRIM PAINT COLOR:
SW 7656 RHINESTONE

WINDOW/STOREFRONT COLOR:
BLACK

STONE:
NCS; COUNTRY VILLA, GRANITE

BUNGALOW COTTAGE 1
PALETTE 2

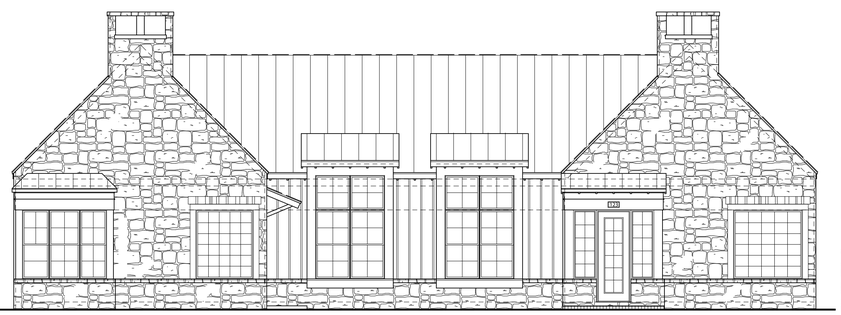

STANDING SEAM METAL ROOF:
BERRIDGE; ZINC-COTE

SIDING/TRIM PAINT COLOR:
SW 7656 RHINESTONE

WINDOW/STOREFRONT COLOR:
BLACK

STONE:
NCS; COUNTRY VILLA, GRANITE

DUPLEX COTTAGE 2
PALETTE 1

STANDING SEAM METAL ROOF:
BERRIDGE; ZINC-COTE

SIDING/TRIM PAINT COLOR:
SW 7656 RHINESTONE

WINDOW/STOREFRONT COLOR:
BLACK

STONE:
NCS; COUNTRY VILLA, GRANITE

BUNGALOW COTTAGE 3 - NO CHIMNEY
PALETTE 1

VILLAGE PARK WILLS | COTTAGES

ALPHARETTA, GA