CITY COUNCIL MEETING & PUBLIC HEARING
APRIL 15, 2024

ALPHARETTA CITY HALL
COUNCIL CHAMBERS
2 PARK PLAZA
6:30 PM

1. CALL TO ORDER

2. ROLL CALL

3. PLEDGE TO THE FLAG

4. PRESENTATIONS & PROCLAMATIONS

A. Proclamation: Innovation Academy Fencing Team

5. WORK SESSION ITEMS

A. Union Hill Park Design and Parking Proposal
Review of the existing design for Union Hill Park and consideration of a new design to allow for the potential of more parking at Union Hill Park

6. CONSENT AGENDA

A. City Council Meeting Minutes (Meeting of 3/25/2024)
Consideration of approval of the City Council meeting minutes from the meeting of March 25, 2024.

B. Alcoholic Beverage License Application
Consideration of approval of the following alcoholic beverage license application:

1. PH-24-AB-05 RHE 01, LLC d/b/a The Metropolitan Club
5895 Windward Parkway, Suite 100, Alpharetta, GA 30005

Change in Ownership
Eating Establishment
Consumption on Premises
Distilled Spirits, Beer, Wine & Sunday Sales
Owner: RHE 01, LLC
Registered Agent: Sunil Reddy

7. NEW BUSINESS

A. Invitation to Bid 24-018: Contract Award for Windward Parkway Drainage Improvements
Consideration of approval of a contract award of ITB 24-018 to Backbone Infrastructure, LLC for the construction of drainage improvements along Windward Parkway for an amount not to exceed $383,506.00 and with authorization for the Mayor to execute all necessary documents.

B. Invitation to Bid 24-013: Webb Bridge Park Sanitary Sewer Connection
Consideration of approval of a contract award for ITB 24-013 to Sol Construction, LLC for the construction of Webb Bridge Park Sewer Connection in an amount not to exceed $423,732.00 and with authorization for the Mayor to execute all necessary documents.

C. Purchase Approval: Public Safety Vehicles
Consideration of approval of the purchase of fifteen (15) 2024 Chevrolet Tahoes in the amount of $821,490.40 and the upfitting of these vehicles from Dana Safety Supply Inc. in the amount of $364,570.81 (utilizing the City's competitively procured On-Call Public Safety Vehicle Upfitting contract), and with authorization for the Mayor to execute all necessary documents.

D. Purchase Approval: Replacement of Uninterrupted Power Supply (UPS)
Consideration of approval of the purchase of an Uninterrupted Power Supply replacement from

Southern Computer Warehouse under the State of Georgia technology contract (#99999-SPD0000172-14) in the amount of $64,827.17 and with authorization for the Mayor to execute all necessary documents.

E. 2024-2025 Citywide Group Medical, Dental, Vision, Disability, and Life Insurance Coverages
Consideration of approval of the award for Plan Year 2024-2025 the City's group Medical and Dental coverage to Cigna; Vision coverage to Eye Med, and Life and Disability coverage to New York Life and with authorization for the Mayor to execute all necessary documents.

F. Memorandum of Understanding: Lionheart WORKS and Crabapple Government Center Facility Usage
Consideration of approval of the Memorandum of Understanding between Lionheart LifeCenter and the City of Alpharetta for Lionheart WORKS to continue to rent space within the Crabapple Government Center and with authorization for the Mayor to execute all necessary documents.

G. Premises Usage Agreement: Alpharetta First Methodist Church for 2024 Taste of Alpharetta Parking
Consideration of approval of a Premises Usage Agreement between the City of Alpharetta and Alpharetta First Methodist Church, Inc., permitting the use of the Cumming Street Parking Lot for the 2024 Taste of Alpharetta and with authorization for the Mayor to execute all necessary documents.

H. Memorandum of Understanding: City of Alpharetta and North Point Mall - The Spotlight Community Stage
Consideration of approval of the Memorandum of Understanding between REEP-RTL NPM GA LLC (dba North Point Mall) and the City of Alpharetta for use of a vacant space within North Point Mall for the purpose of an indoor community stage and to authorize the mayor to execute all necessary documentation.

I. Grant Agreement: Arts Alpharetta and Bi-Yearly Outdoor Sculpture Exhibit / Art On-Loan Project
Consideration and approval of the FY2024-2025 bi-yearly agreement between the City of Alpharetta and Arts Alpharetta, Inc., for the curation and installation of a public outdoor art sculpture exhibit and to authorize the mayor to execute all necessary documentation.

8. PUBLIC COMMENT

9. REPORTS

10. EXECUTIVE SESSION (IF NECESSARY)

11. ADJOURNMENT

A PROCLAMATION
BY THE MAYOR AND COUNCIL OF THE CITY OF ALPHARETTA, GEORGIA

"Innovation Academy Fencing Club"

WHEREAS: Under the leadership of Head Coach Bill Donges and Assistant Coach Tyler McCubbins, the club's season has been incredibly successful. The Innovation Academy Fencing Women's Club placed first in the State Championship and Men's Club placed third in the State Championship; and

WHEREAS: Coach Donges and Coach McCubbins have worked diligently to build a successful fencing program and have worked together for quite some time; Coach McCubbins competed as a student when Coach Donges was the fencing coach at North Springs High School. Together they encourage their fencers and focus on strengthening their leadership skills, all while practicing their footwork, coordination, timing, and balance to become stronger fencers; and

WHEREAS: The following students served as team captains for the 2023 – 2024 Innovation Academy Fencing Club:

Anna Donges	**Catherine Rafferty**	**Eric Zhang**	**Ghaleb Sarsour**
Rebecca Hahn	**Emma Cheng**	**Oliver Nickerson**	**Yuchen Fan**; and

WHEREAS: The Innovation Academy Fencing Club competed in several tournaments this season against local competitors; their Club won four tournaments and were first place in the league standings; and

WHEREAS: During tournaments, there are four performance awards ("Knight," "Wizard," "Excalibur," and "Oracle of the Silver Bunny"). The "Knight" award is given if a fencer wins his or her first direct elimination, the "Wizard" award is given if a fencer finishes in the top sixteen, and the "Excalibur" award is given if a fencer places third or higher. Recipients of these awards receive a sentimental ring; the rings are handmade by the coach and are a beautiful combination of silver and colored metals. Fencing Club members received several of these performance award throughout the season; and

WHEREAS: The highest leadership award is called the "Oracle of the Silver Bunny" and is presented to those who represent responsibility, respect, honesty, integrity, and sportsmanship. Only two were awarded this year to student fencers, Nyneeshia Padala and William Tran.

NOW THEREFORE: We, the Mayor and City Council of the City of Alpharetta do hereby recognize the 2023-2024 Innovation Academy Fencing Club, along with their coaches, parents, administration and staff for their determination and dedication this season and congratulate them on their achievements.

SO PROCLAIMED: This 15th day of April 2024, by the Mayor and City Council of the City of Alpharetta, Georgia.

Jim Gilvin
Mayor of the City of Alpharetta

Lauren Shapiro
City Clerk for the City of Alpharetta

STAFF REPORT

Department: Recreation, Parks & Cultural Services
Submitted By: Morgan Rodgers
Meeting Date: April 15, 2024

AGENDA ITEM:

Union Hill Park Design and Parking Proposal
Review of the existing design for Union Hill Park and consideration of a new design to allow for the potential of more parking at Union Hill Park

STAFF RECOMMENDATION:

This report is presented for Mayor and City Council discussion and information purposes. No vote or formal action is requested at this time.

BUDGET & PROCUREMENT:

BUDGETED ITEM: NO

FISCAL IMPACT: NO

INCLUDED IN CURRENT FY CPTL BUDGET: NO

INCLUDED IN CURRENT FY OPRT. BUDGET: NO

TOTAL PROJECT COST: COSTS ASSOCIATED WITH THE NEW DESIGN HAVE YET TO BE DETERMINED AS STAFF WISHES TO SEEK MAYOR AND CITY COUNCIL'S PRELIMINARY THOUGHTS AND GUIDANCE BEFORE FURTHER EXPLORATION.

APPROPRIATIONS:

ACCOUNT TITLE/NUMBER	DOLLAR AMOUNT

EXTERNAL FUNDING SOURCES:

ACCOUNT TITLE/NUMBER	DOLLAR AMOUNT

ITEM DESCRIPTION:

Union Hill Park was built in 1995 as a special use facility for roller hockey. The popularity of roller hockey faded, and the park usage was almost nonexistent. With the development of the Alpharetta Greenway from Marconi Road Park to Union Hill Park, the purpose of the park was re-imagined. The new design included the renovation of the covered roller hockey rink into a special event/music venue, a Greenway Trail head and connection to the Forsyth County Greenway, redesign of the parking, and a new skate park and play/gathering area. The conceptual design was shown to citizens at public input meetings and was approved by the Recreation Commission and the City Council. Funds were allocated in the 2021 Bond Referendum for the construction of the park.

In 2023, the renovation of the covered arena into a special event/music venue was completed utilizing bond funds. Home By Dark's Union Hill Summer Concert Series, Shamrockin' for a Cure, Atlanta Magazine's Grill Fest, I Can Bike Camp, and Camp Momentum are all events scheduled to be held at the park in 2024.

One newly introduced factor with the repurposed arena is limited parking. Today, there are 107 parking spaces in Union Hill Park. The current design would improve the flow and add another 11 parking spaces. Through the City's recently executed Memorandum of Understanding with ZKTeco (the company next door to Union Hill Park), 72 additional parking spaces have been made available to accommodate events on Friday evenings, Saturday, and Sundays.

With the growing popularity of the use of Union Hill Park as a trail head for the Alpharetta Greenway and the

expanded number of events held and anticipated at the covered special event/music venue, the current design for the addition of only 11 parking spaces was reworked to see if the plan could include even more parking. The new design resulted in an additional 49 parking spaces as opposed to only 11.

At this time, staff wishes to present both the original and revised parking designs (see attached) to the Mayor and City Council for review and consideration.

ALTERNATIVES:

ATTACHMENTS:

1. Union Hill 100% Concept Package_Revised
2. Hockey Slab Parking Concept

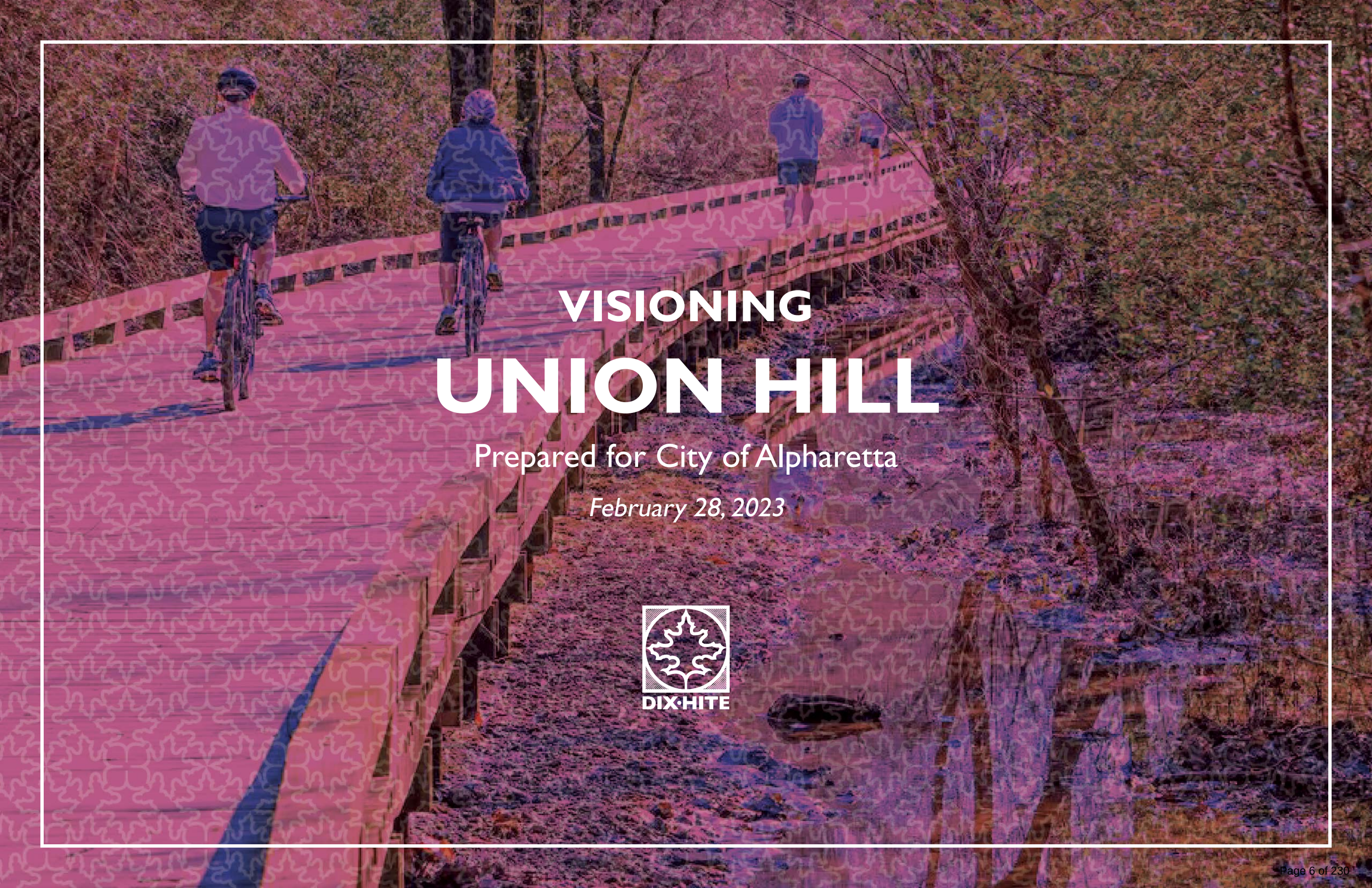

VISIONING
UNION HILL

Prepared for City of Alpharetta

February 28, 2023

DIX·HITE

THE 6D PROCESS

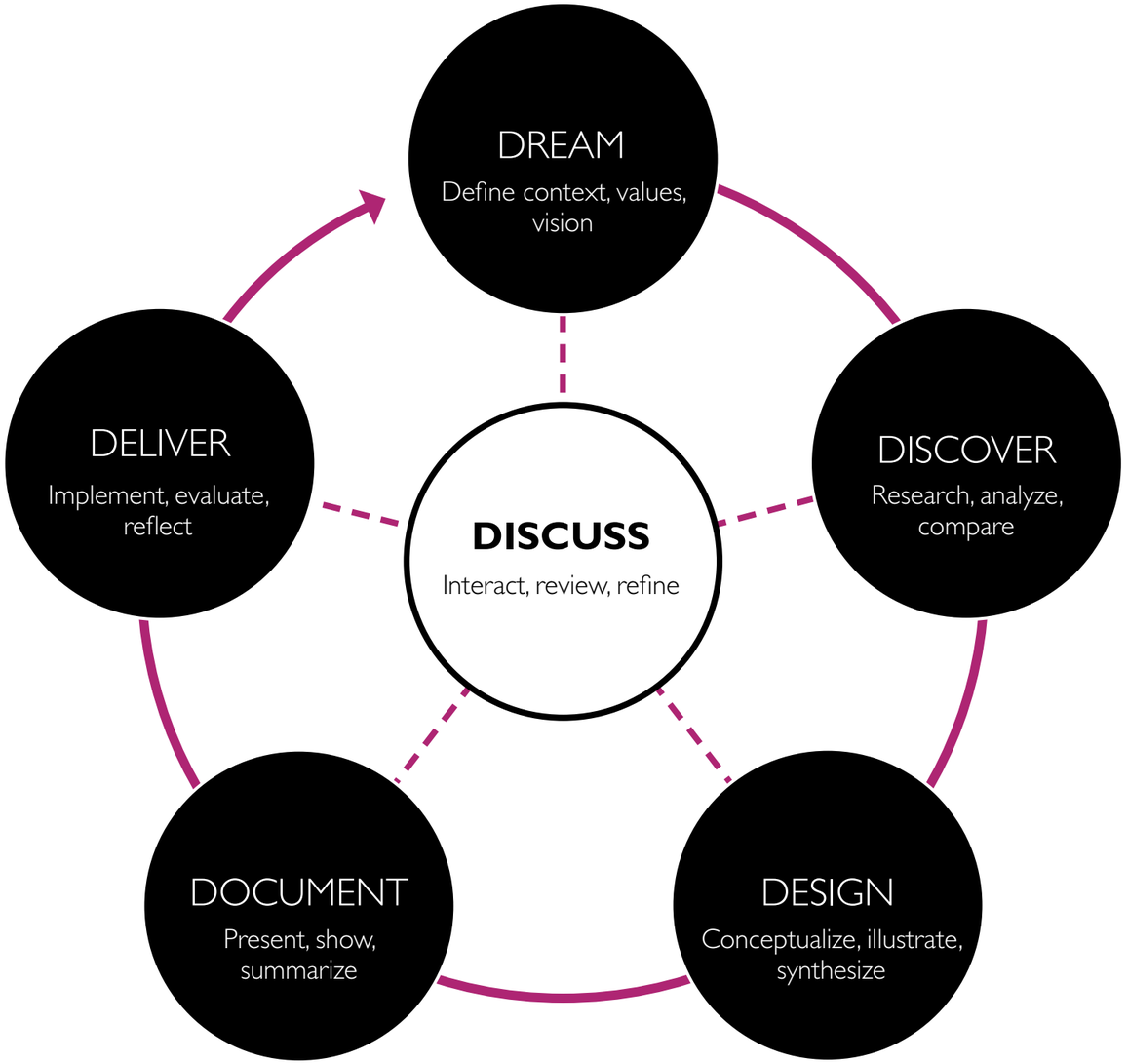

CONTEXT MAP

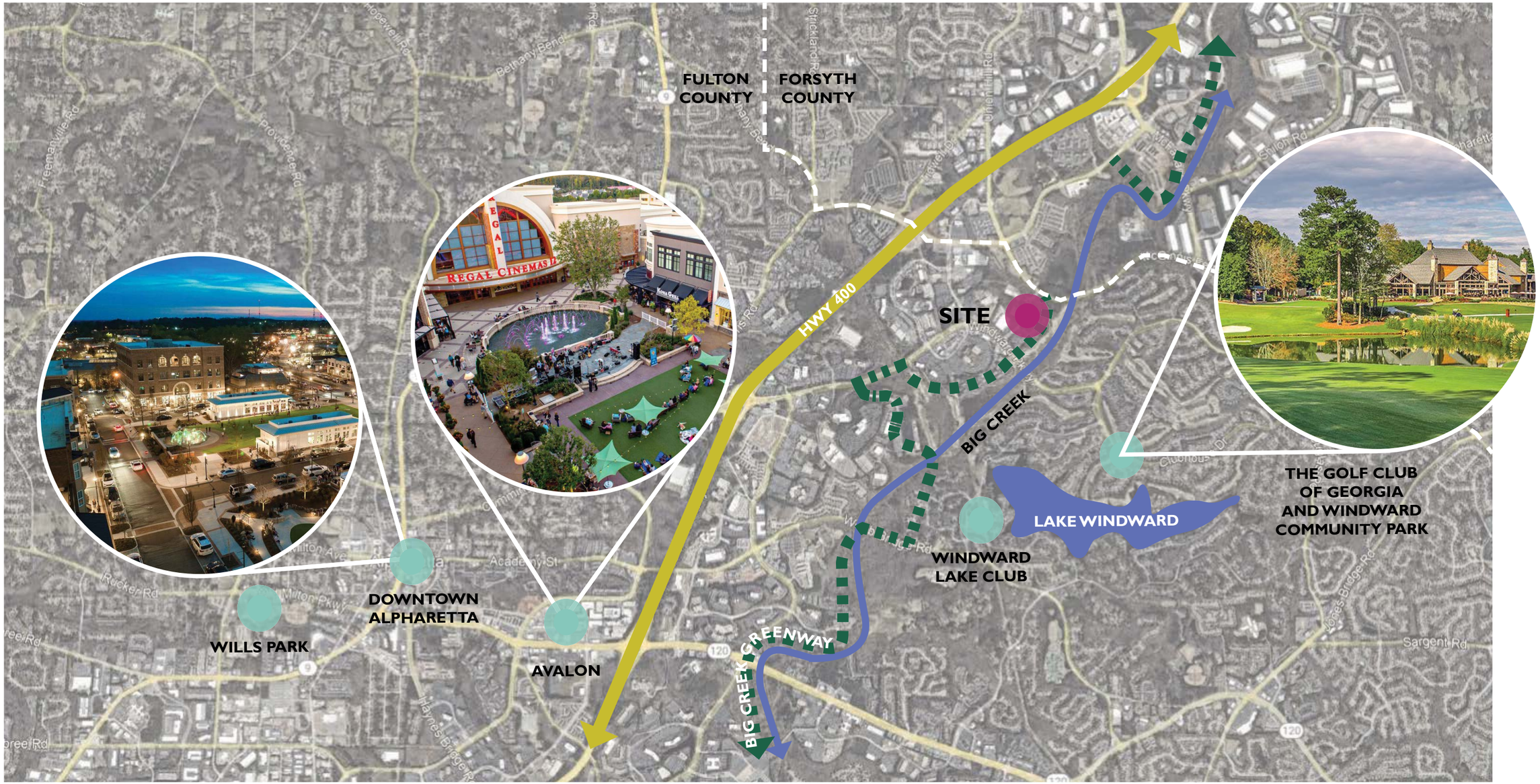

NOT TO SCALE

BIG CREEK GREENWAY

GOLF CLUB OF GEORGIA

WINDWARD COMMUNITY PARK

DOWNTOWN ALPHARETTA

BIG CREEK GREENWAY

SITE INVENTORY

1. PAVILION
2. PARKING LOT
3. EXISTING SKATEPARK
4. BIKE PATH
5. RESTROOM
6. DETENTION POND
7. PUBLIC ACCESS/CUL-DE-SAC
8. CHAMPION PINE
9. LITTLE PINE TRAIL
10. MULTI-FAMILY DEVELOPMENT
11. UNION HILL ROAD
12. BIG CREEK GREENWAY
13. EXISTNG SIDEWALK
14. MCGINNIS FERRY ROAD
15. BIG CREEK TRIBUTARY
16. ADJACENT PROPERTY
17. MATERIAL STORAGE SHED

NOT TO SCALE

SITE ANALYSIS

CONSTRAINT

OPPORTUNITY

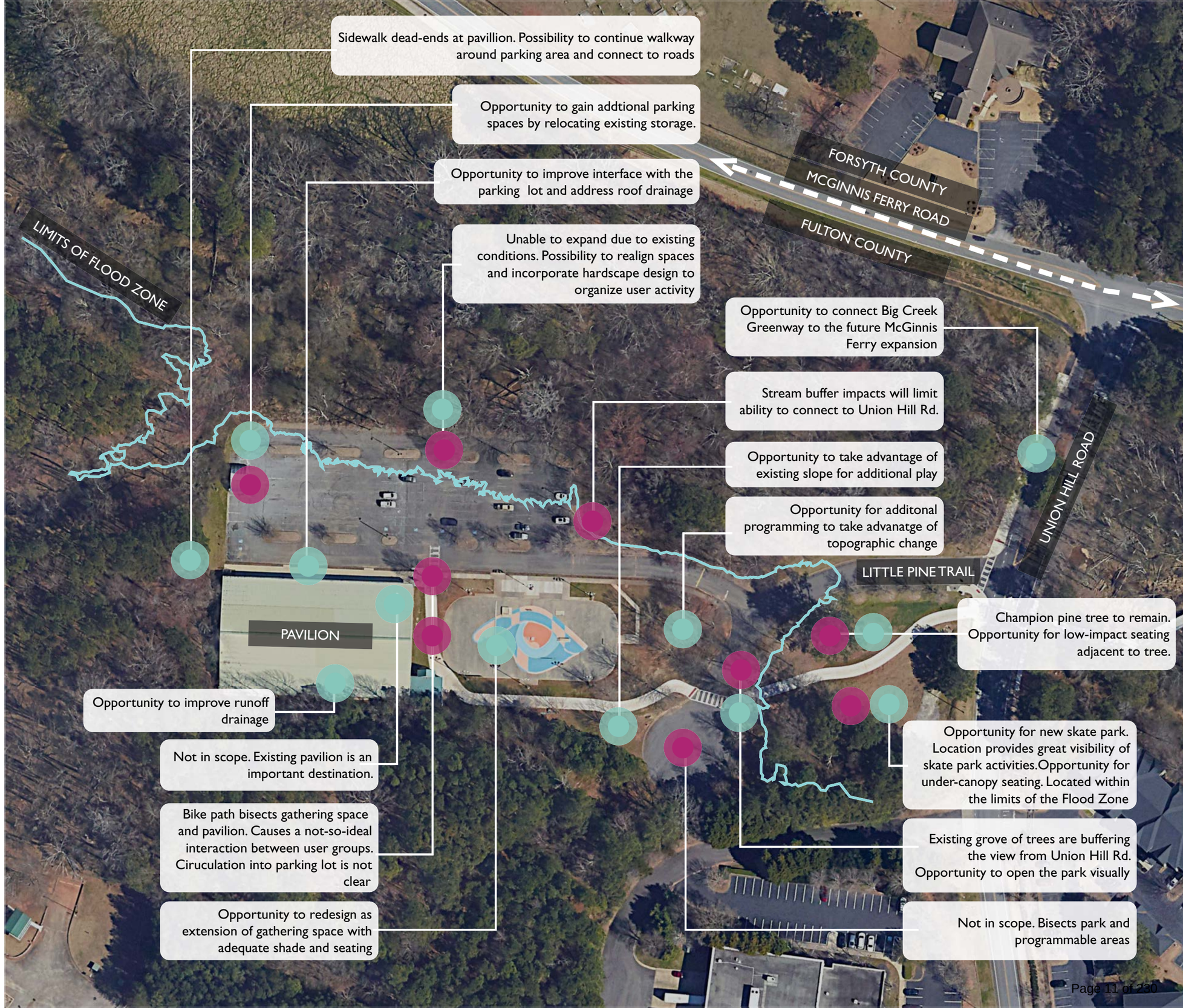

NOT TO SCALE

CONCEPT VISION

"TO BE AN ARTIST IS TO BELIEVE IN LIFE" - HENRY MOORE

UNION HILL PARK ENCOURAGES THE COMMUNITY TO GATHER WITHIN PLAYFUL, ARTISTIC, AND COLORFUL FORMS, WHILE SIMULTANEOUSLY PROVIDING OUTDOOR ACTIVITIES FOR ALL AGES AND OFFERING MEANINGFUL CONNECTIONS TO NEIGHBORING TRAILS. THE PARK GIVES ITS COMMUNITY MEMBERS THE ABILITY TO ESCAPE THE HUSTLE AND BUSTLE OF LIFE AND RE-ENERGIZE THROUGH FAMILY EXPERIENCES, SOCIAL INTERACTION, AND PRIORITIZING A CONNECTION TO THE OUTDOORS.

DIX·HITE

CONNECTION

GATHER

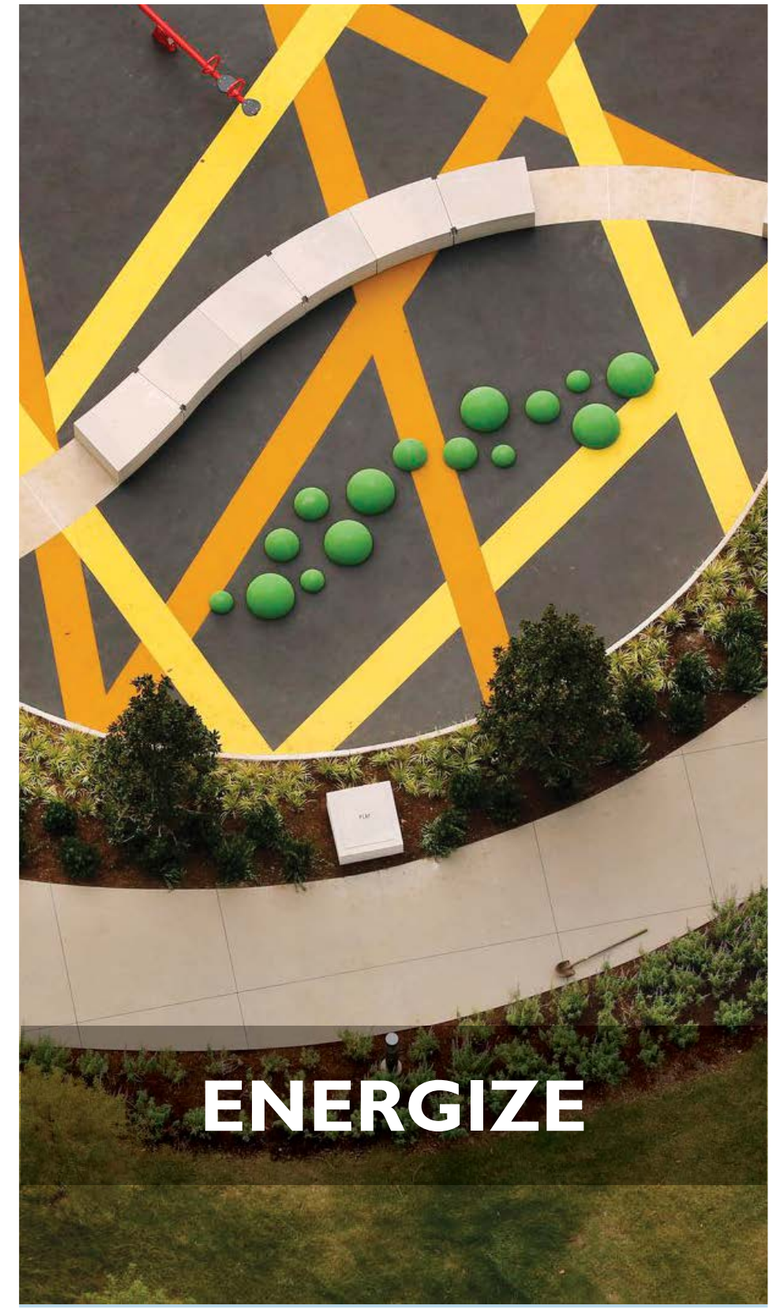
ENERGIZE

SKATEPARK INSPIRATION

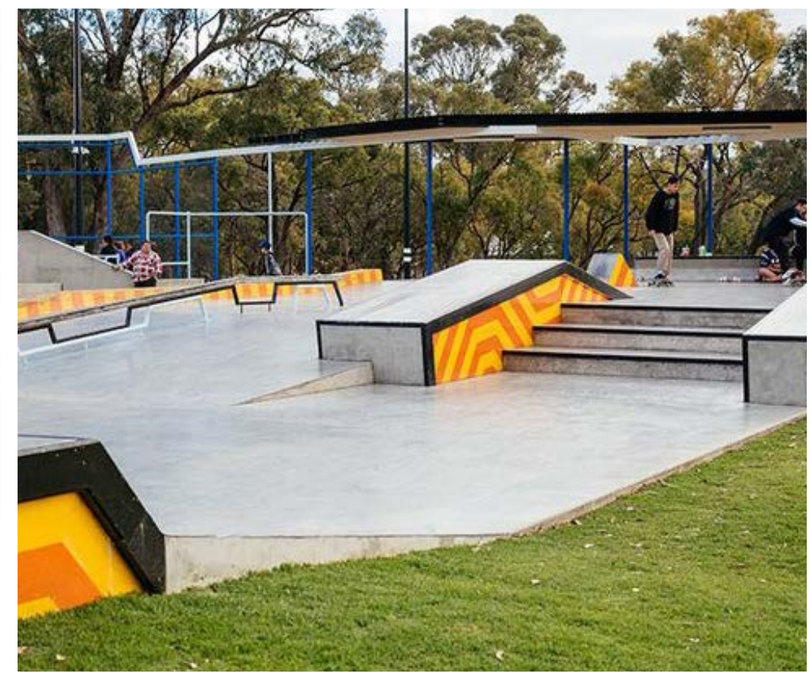

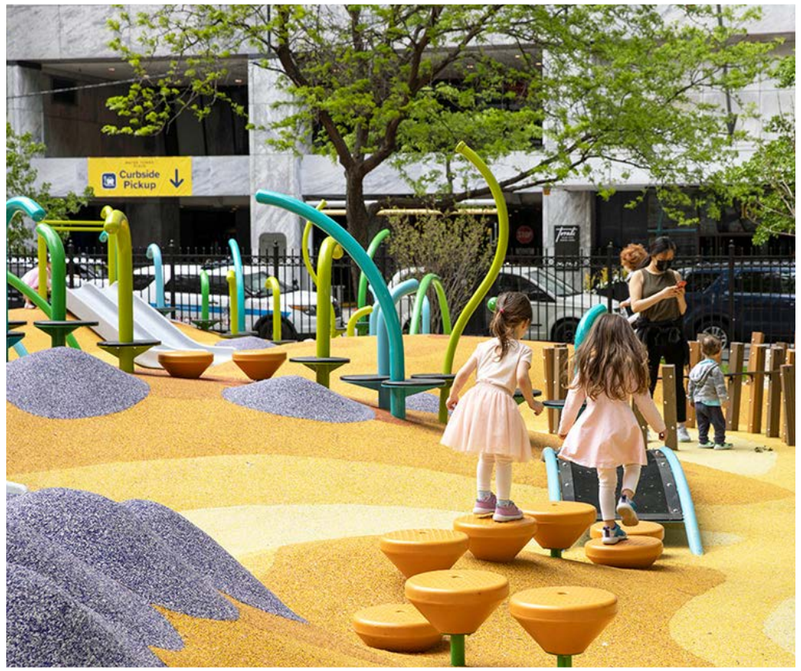

PLAY INSPIRATION

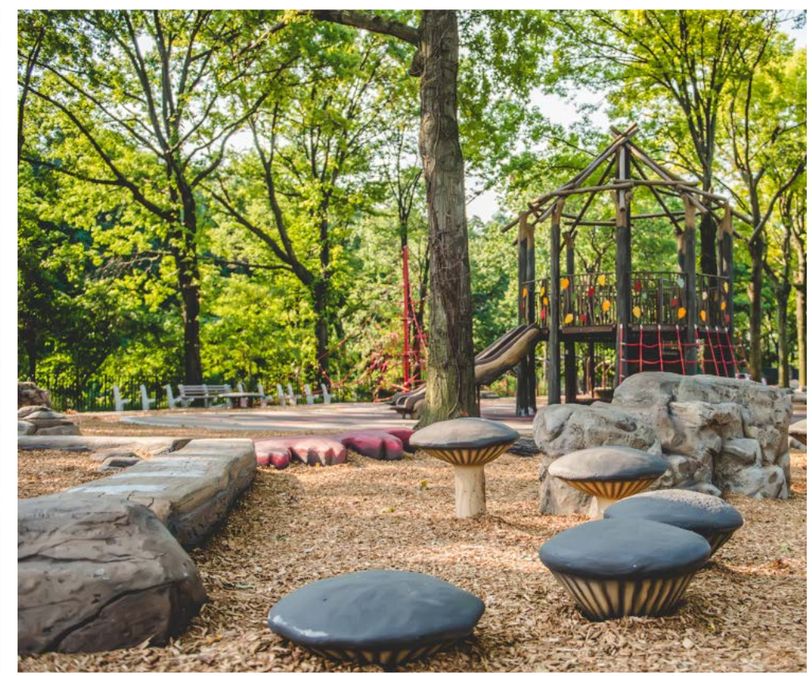

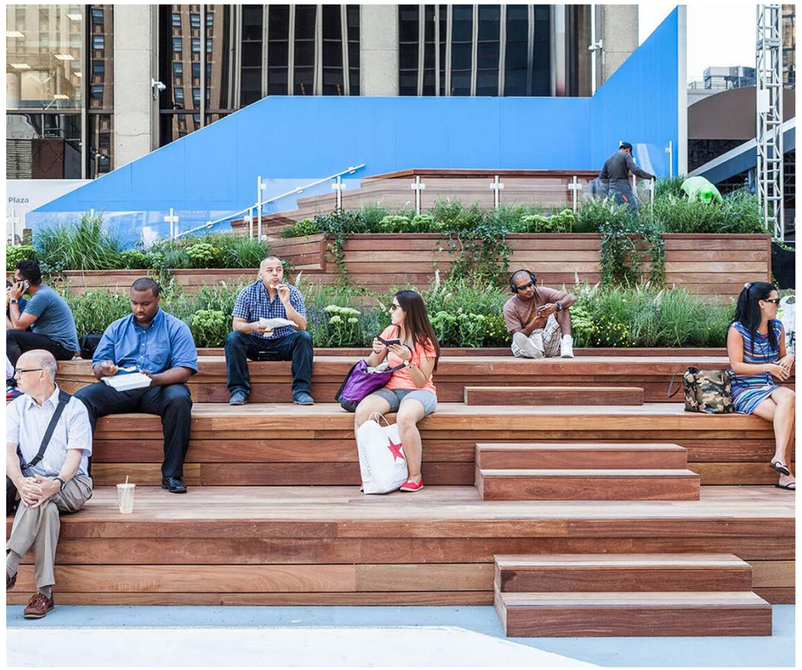

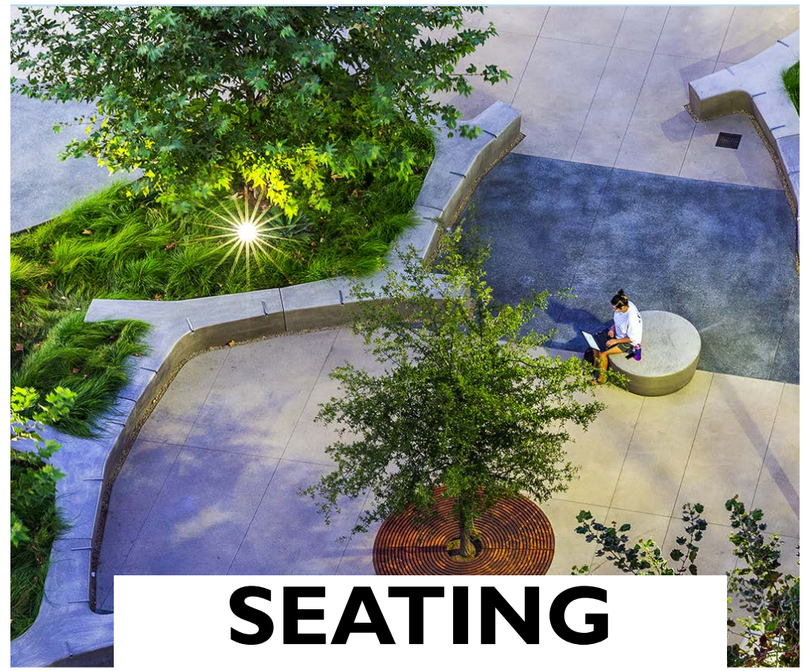

SEATING INSPIRATION

SHADE INSPIRATION

ART INSPIRATION

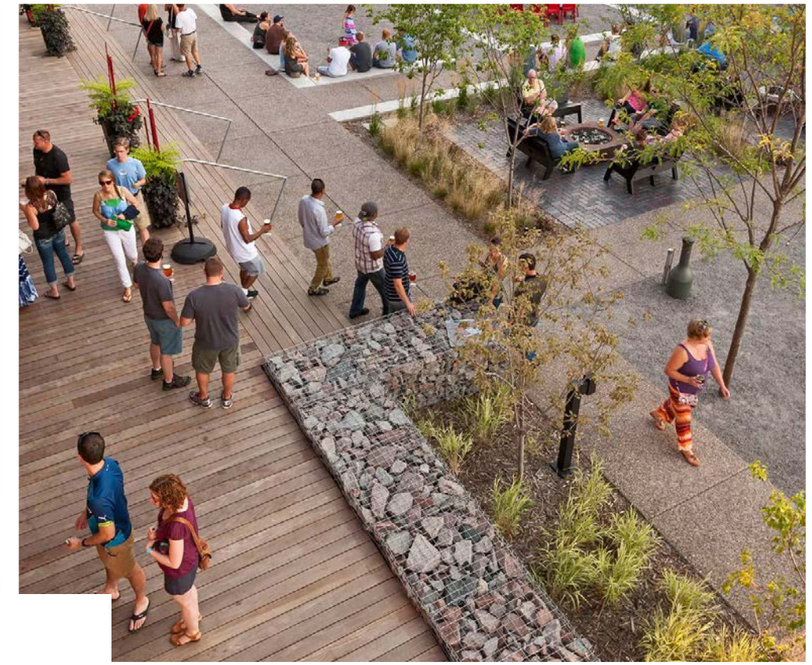

MATERIAL RE-USE

PROPOSED CIRCULATION

PROS

BIKE TRAFFIC IS DIRECTED AWAY FROM PLAY + PLAZA PROGRAMMING

OPPORTUNITY FOR PLAYFULLY ENGAGING STREET CROSSINGS

PEDESTRIANS AND BIKERS WILL BOTH ENTER THROUGH THE SAME PLAZA

THE FORKED BIKE PATH ALLOWS BIKERS TO EITHER BYPASS OR ENTER THE OTHER SITE PROGRAMS

CONS

NUMEROUS INTERSECTIONS SHARED BY BIKES AND PEDESTRIANS

DISTANCE TO HALCYON TRAILHEAD:
- 30 MIN WALK
- 6 MIN CAR RIDE

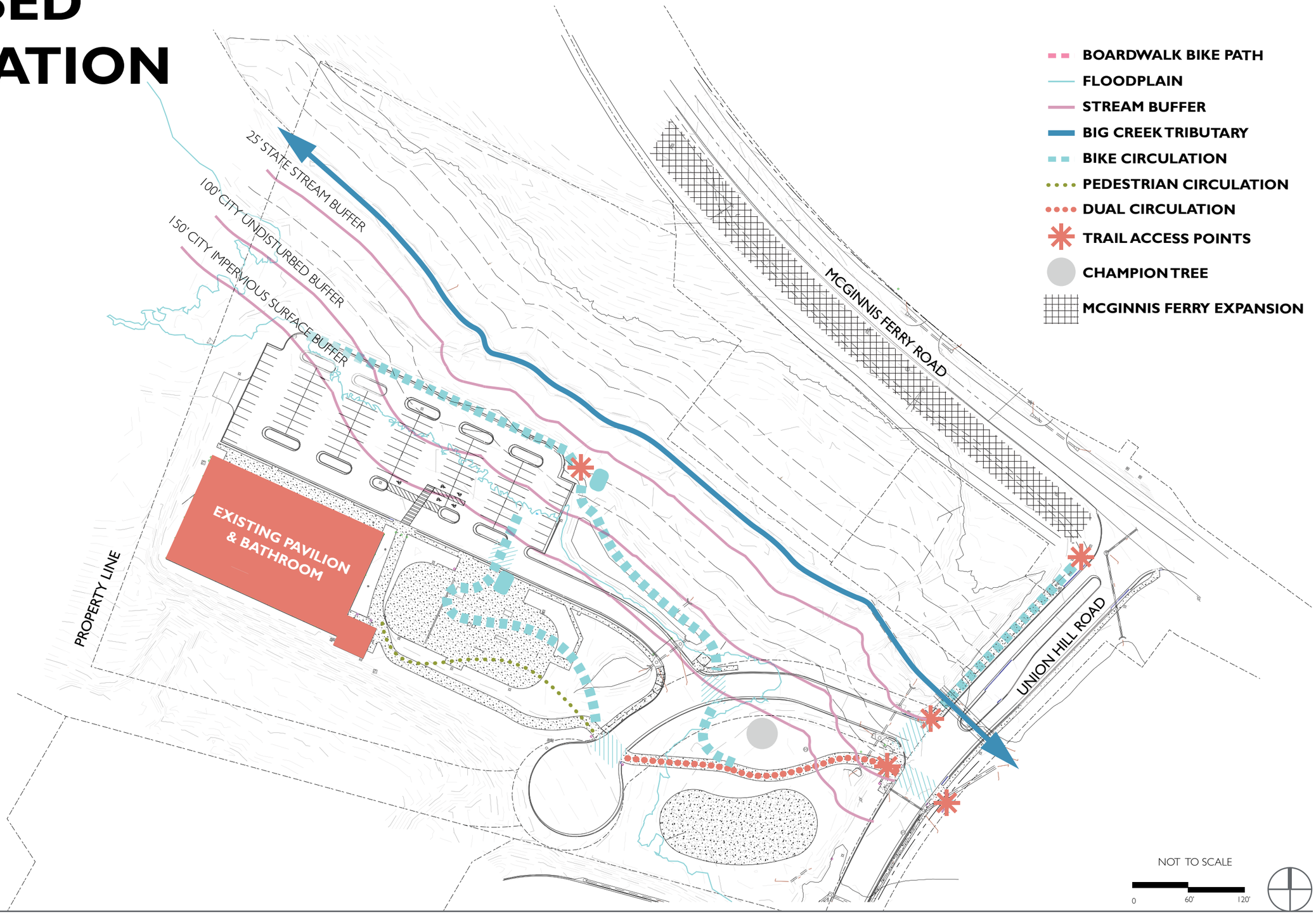

FUNCTIONAL DIAGRAM

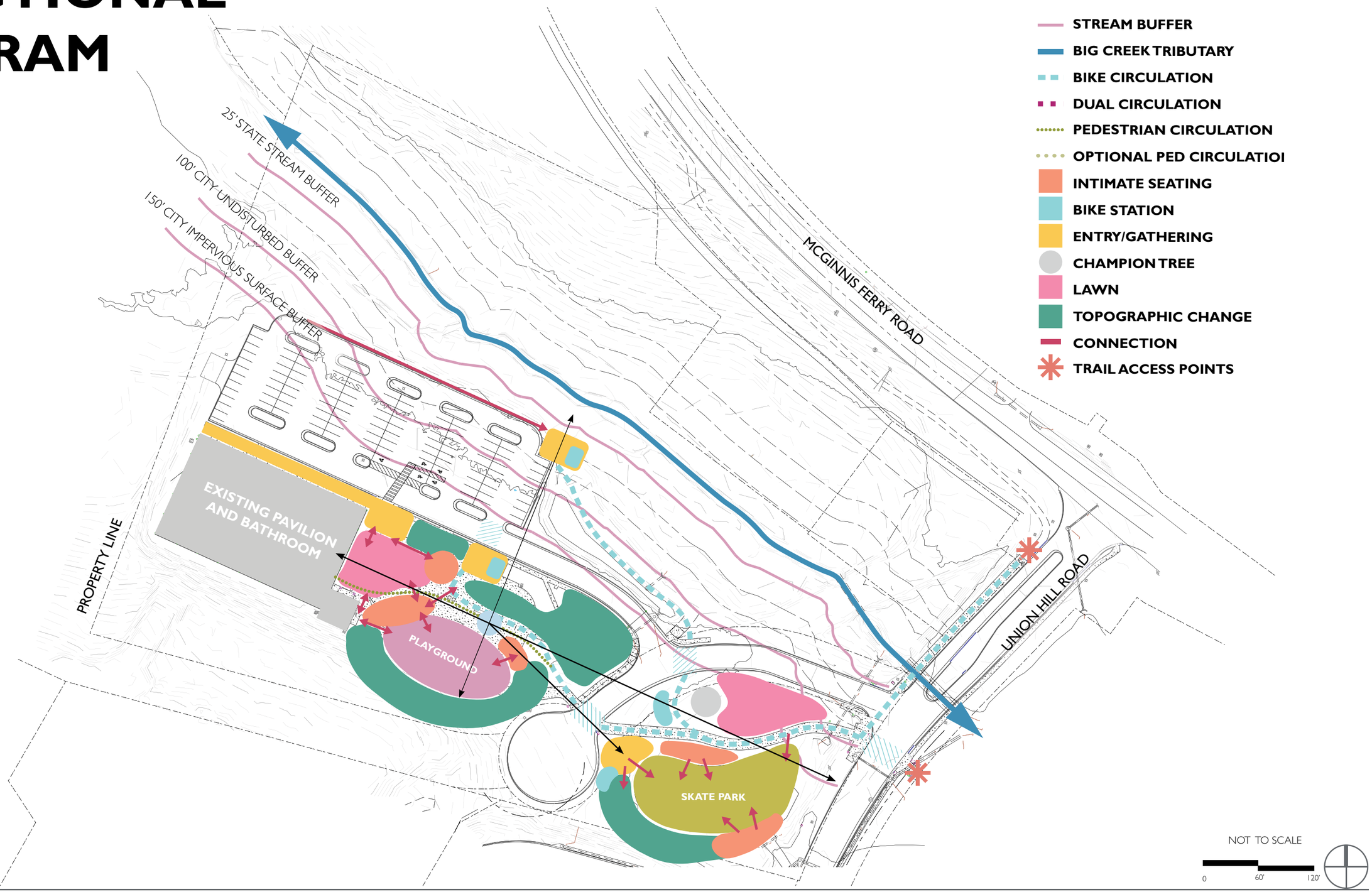

1" : 80'
0
40'
80'

DESIGN PROGRAM

"EVERY ACT OF CREATION IS FIRST OF ALL AN ACT OF DESTRUCTION" - PABLO PICASSO

1. PAVILION
2. REIMAGINED PARKING LOT
3. PAVING ORGANIZATION FOR CYCLISTS
4. CYCLIST TRAIL ACCESS
5. PARK ENTRY
6. SHADE STRUCTURE
7. RESTROOM
8. PLAY EQUIPMENT - SWINGS
9. FUTURE ART INSTALLATION
10. PLAY SPACE WITH SLIDES
11. DETENTION AREA WITH RECLAIMED CONCRETE
12. SKATEPARK
13. EXPANDED TRAIL CORNER
14. MATERIAL STORAGE SHED

1" : 80'

0 40' 80'

VIEW TO PAVILION

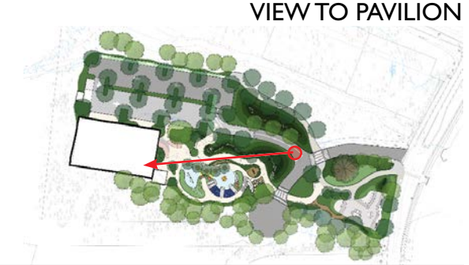

DESIGN PROGRAM: PLAY

1. LARGE GROUP SWING
2. PATHWAY TO SLIDES
3. CLIMBING PLAY
4. LOOKOUT POINT
5. DUAL SLIDE
6. SINGLE SLIDES/ADVENTURE CLIMBING
7. PLAY/CLIMBING ELEMENT
8. SEATING
9. STAIR ACCESS TO SLIDES
10. SINGLE SWING
11. ADVENTURE STEPPER PLAY

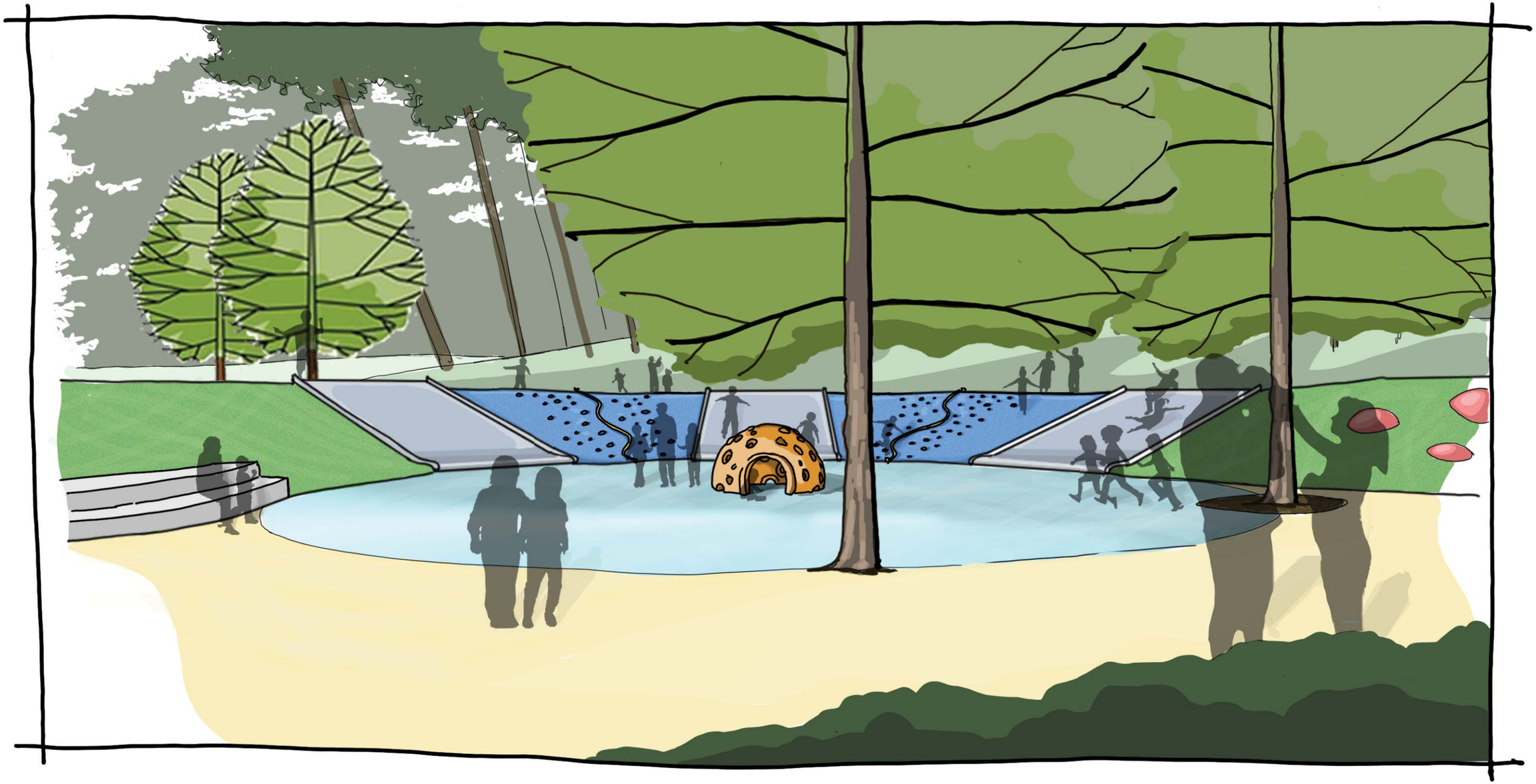

VIEW TO SLIDES

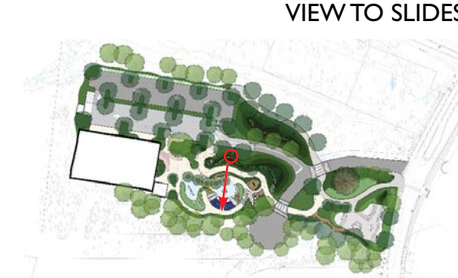

DESIGN PROGRAM: RECREATION

1. PAVING ORGANIZATION FOR CYCLISTS
2. CYCLIST TRAIL ACCESS
3. BIKE STAGING
4. TABLETOP CROSSING
5. SKATEPARK

1" : 80'

0 40' 80'

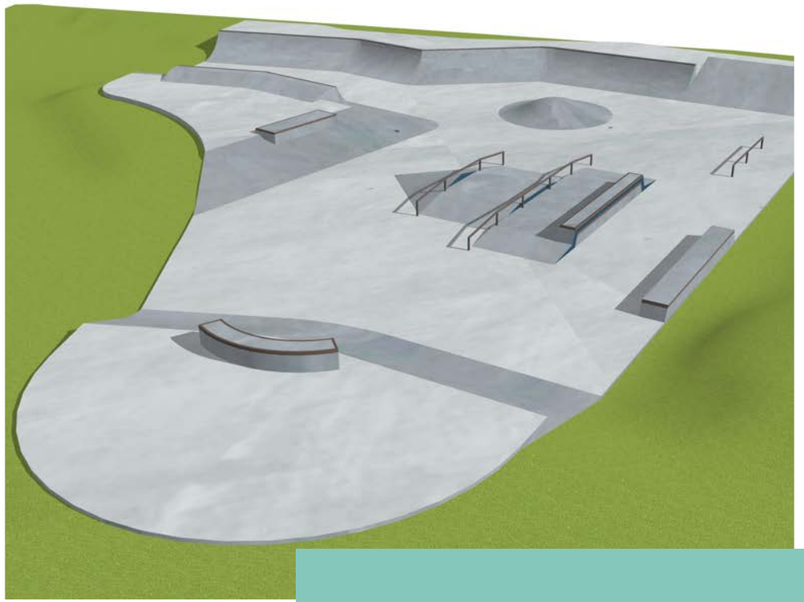

SKATEPARK VIEWS

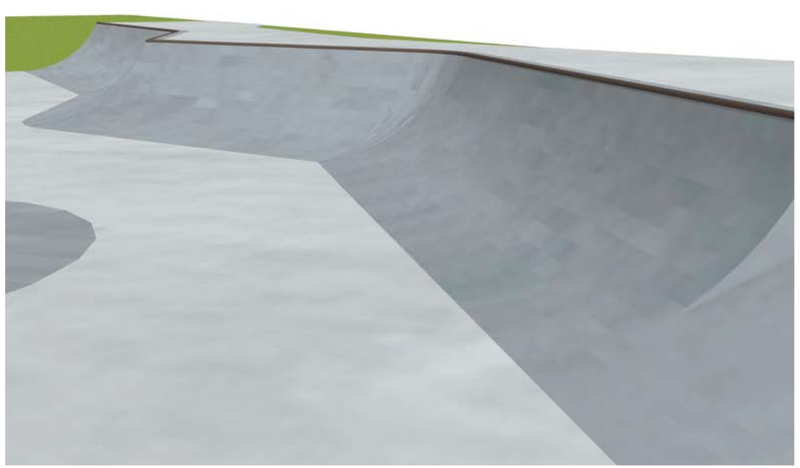

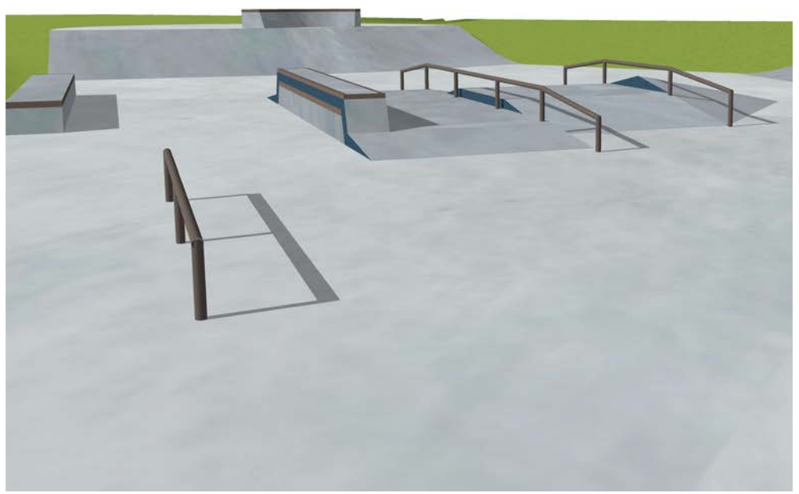

DESIGN PROGRAM: SEATING

1. PERMANENT PLAZA SEATING
2. SWING SEATING
3. PLAY SEATING
4. SKATEPARK SEATING
5. TYPICAL PARK SEATING

1" : 80'

0 40' 80'

DESIGN PROGRAM: PARKING

1. CONCRETE EVENT STAGING AREA
2. PAVING ORGANIZATION FOR CYCLISTS
3. PAVILION/EVENT LARGE VEHICLE PARKING
4. SAFER ADA SPACES
5. ONE-WAY LOT WITH ANGLED SPACES
6. GAIN IN NUMBER + HEALTH OF TREES
7. NET GAIN IN PARKING; APPROXIMATELY 116 SPACES (+11)
8. RELOCATED - MATERIAL STORAGE SHED

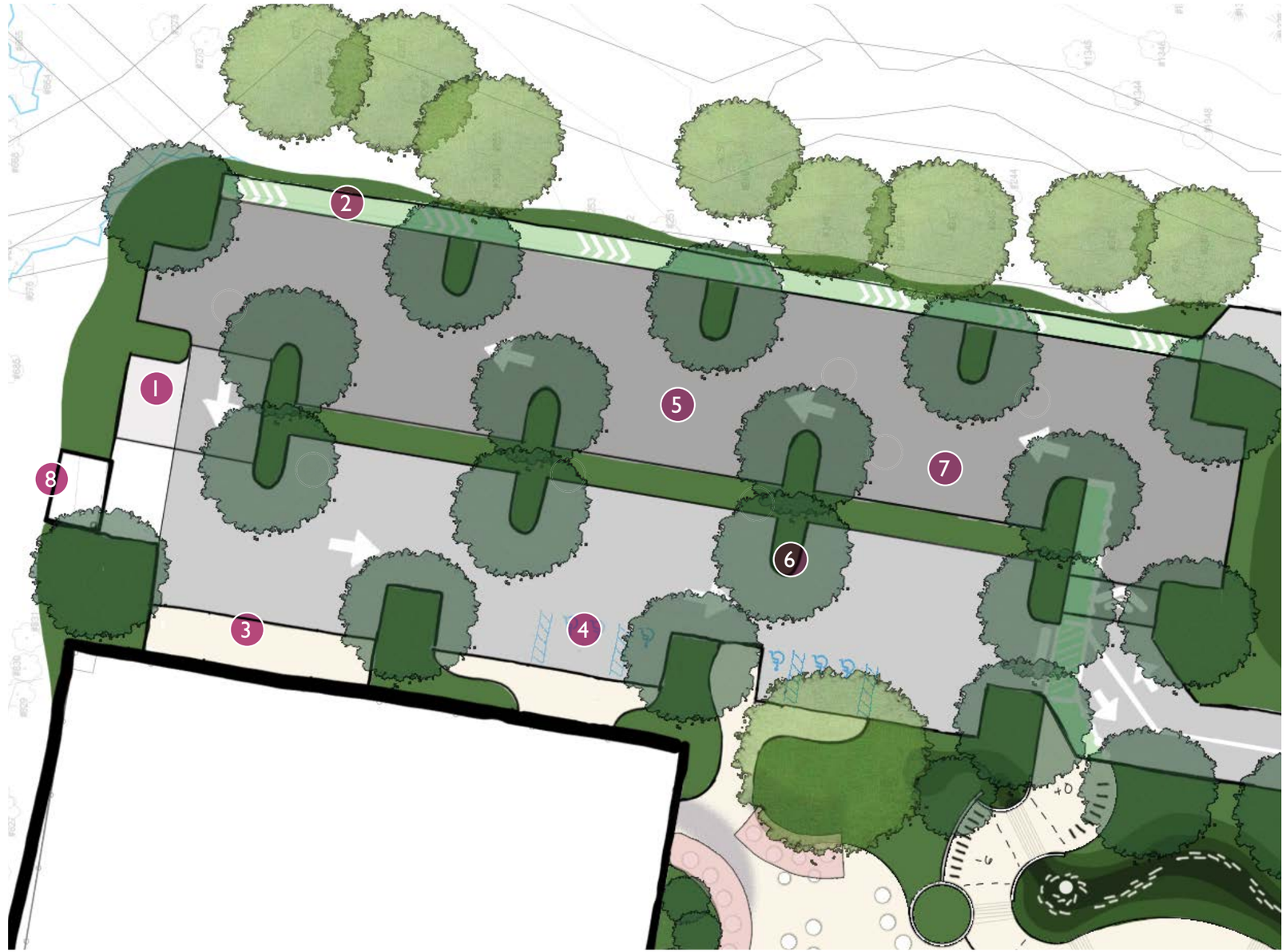

1" : 40'
0 20' 40'

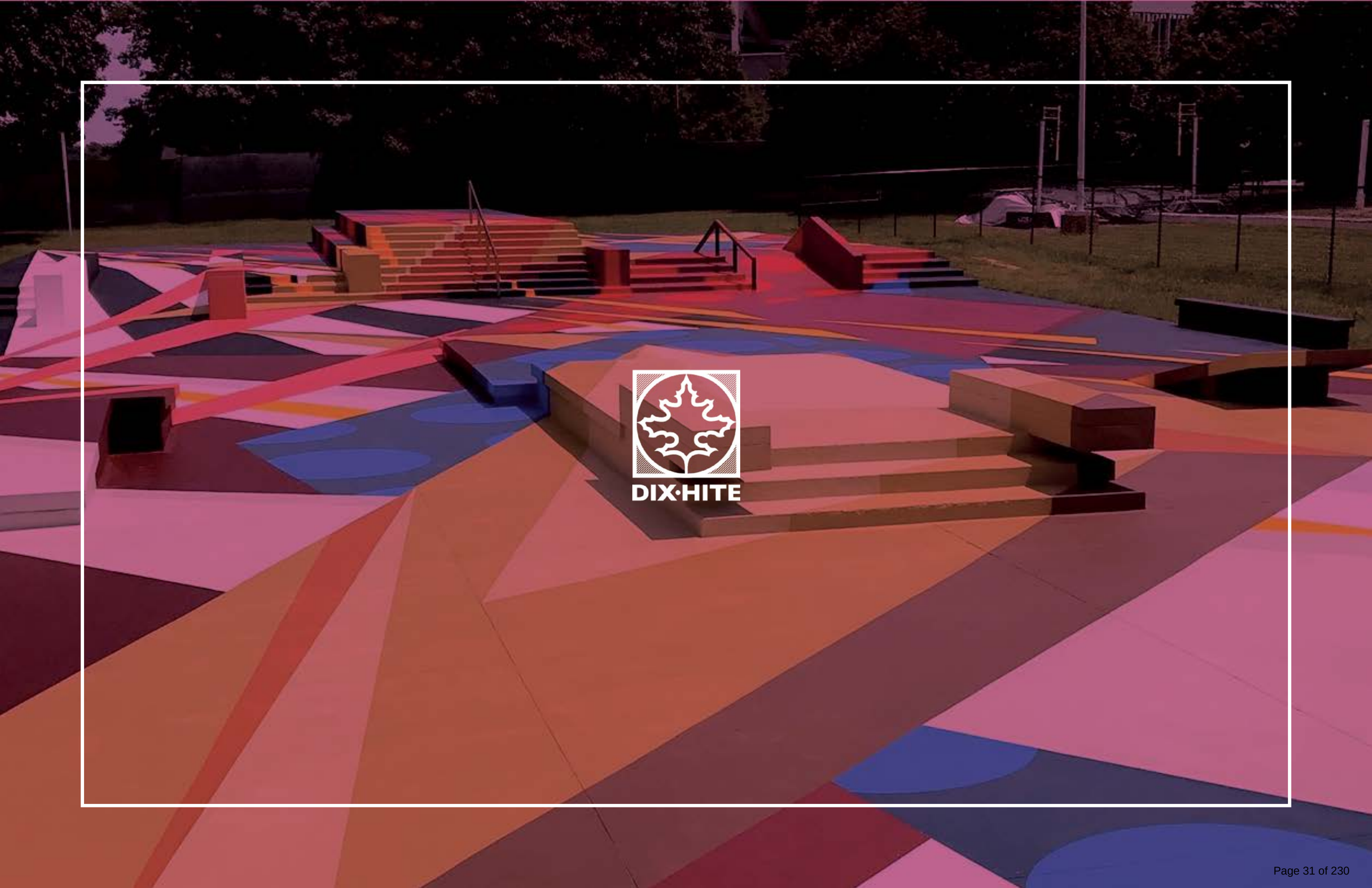
DIX·HITE

UNION HILL PARK PARKING EXPANSION CONCEPT
FEBRUARY 16, 2024
+49 SPACES

STAFF REPORT

Department: City Clerk
Submitted By: Lauren Shapiro
Meeting Date: April 15, 2024

AGENDA ITEM:

City Council Meeting Minutes (Meeting of 3/25/2024)
Consideration of approval of the City Council meeting minutes from the meeting of March 25, 2024.

STAFF RECOMMENDATION:

Approve, as part of the consent agenda, the minutes from the March 25, 2024 City Council Meeting.

BUDGET & PROCUREMENT:

BUDGETED ITEM: NO
FISCAL IMPACT: NO
INCLUDED IN CURRENT FY CPTL BUDGET: NO
INCLUDED IN CURRENT FY OPRT. BUDGET: NO
TOTAL PROJECT COST:
APPROPRIATIONS:

ACCOUNT TITLE/NUMBER	DOLLAR AMOUNT

EXTERNAL FUNDING SOURCES:

ACCOUNT TITLE/NUMBER	DOLLAR AMOUNT

ITEM DESCRIPTION:

City Clerk, Lauren Shapiro, prepared a synopsis of the pertinent information that occurred during the City Council Meeting on March 25, 2024.

ALTERNATIVES:

Do not approve the City Council meeting minutes as part of the Consent Agenda.

ATTACHMENTS:

1. CC Minutes 3.25.2024

City Council Meeting & Public Hearing
MARCH 25, 2024
UNOFFICIAL MINUTES
Office of the City Clerk

ALPHARETTA CITY HALL
COUNCIL CHAMBERS | 2 PARK PLAZA | 6:30 PM

This summary is provided as a convenience and service to the public, media and staff. It is not the intent to record proceedings verbatim. Any reproduction of this summary must include this notice. This is not an official record of the Alpharetta City Council Meeting proceedings. Meetings are recorded and available for review at https://www.youtube.com/user/alpharettagov.

1. CALL TO ORDER
   - Mayor Gilvin called the meeting to order at 6:30 p.m.
2. ROLL CALL
   - Council Members
     - Mayor Jim Gilvin
     - Mayor Pro Tem Dan Merkel
     - Brian Will
     - Donald F. Mitchell
     - Douglas J. DeRito
     - John Hipes
   - Council Members Absent
     - Fergal M. Brady
   - Staff
     - Chris Lagerbloom, City Administrator
     - Molly Esswein, City Attorney
     - Lauren Shapiro, City Clerk
     - James Drinkard, Assistant City Administrator
     - Adam Montgomery, Director of Information Technology
     - Brooke Lappin, Director of Courts
     - Cris Randall, Director of Human Resources
     - John Robison, Director of Public Safety
     - Kathi Cook, Director of Community & Economic Development
     - Morgan Rodgers, Director of Recreation, Parks & Cultural Arts Services

- Pete Sewczwicz, Director of Public Works
- Tom Harris, Director of Finance
- Michael Woodman, Planning and Development Services Manager

3. PLEDGE TO THE FLAG

4. PRESENTATIONS & PROCLAMATIONS

A. Recognition of Joy Ross for her service to the Historic Preservation Commission

- Director of Community and Economic Development, Kathi Cook, presented a letter from the Mayor to former Commissioner Joy Ross for her service to the Historic Preservation Commission.

5. CONSENT AGENDA

A. City Council Meeting Minutes (Meeting of 3/18/2024)

Consideration of approval of the City Council meeting minutes from the meeting of March 18, 2024.

B. Alcoholic Beverage License Application

Consideration of approval of the following alcoholic beverage license applications:

1. PH-24-AB-03 The Tipsy Spoon, LLC
   64 North Main Street, Alpharetta, GA 30009
   Eating Establishment
   Consumption on Premises
   Distilled Spirits, Beer, Wine & Sunday Sales
   Owner: The Tipsy Spoon, LLC
   Registered Agent: Jodi Chieco

2. PH-24-AB-04 LOKHO, LLC d/b/a Hen Mother Cookhouse
   50 South Main Street, Suite 3A, Alpharetta, GA 30009
   Eating Establishment
   Consumption on Premises
   Distilled Spirits, Beer, Wine & Sunday Sales
   Owner: LOKHO, LLC
   Registered Agent: Soraya Khoury

C. Financial Management Report (Month Ending January 31, 2024)

Consideration of approval of the Financial Management Report for the month ending January 31, 2024.

- Council Member Mitchell offered a motion to approve the Consent Agenda.
  - Council Member Will seconded the motion.
  - The motion was approved unanimously (6-0).

6. PUBLIC HEARING

A. CLUP-24-01 / Z-24-04 / V-24-04 Upper Hembree Tract / Empire Communities

Consideration of a comprehensive land use plan amendment, rezoning and variances to allow for the redevelopment of the former's Harry's Market with a 149-lot single-family detached subdivision on 19.32 acres. A comprehensive land use plan amendment is requested from 'Commercial' to 'High Density Residential' and a rezoning is requested from PSC (Planned Shopping Center) to R-8D (Dwelling 'For-Sale', Detached Residential – High Density). Variances are requested to Unified Development Code (UDC) Subsection 2.2.9(D) to increase building coverage by principal buildings from 40% to 65%, and reduce minimum lot width from 50' to 31' and to UDC subsection 3.2.8(B)(1)(a) to reduce the 50' undisturbed buffer. The property is located at 1180 Upper Hembree Road and is legally described as being located in Land Lots 550 & 553, 1st District, 2nd Section, Fulton County, Georgia.

- Planning and Development Services Manager, Michael Woodman, came forward to present this item.
- The applicant, Empire Communities, is requesting a comprehensive land use plan amendment, rezoning and variance to allow for the construction of 149 'For-Sale' single-family detached homes on 19.32 acres. The applicant requests a comprehensive land use plan amendment from 'Commercial' to 'High Density Residential' and a rezoning from PSC (Planned Shopping Center) to R-8A/D (Dwelling, 'For-Sale', Attached/Detached Residential). Variances are requested to reduce undisturbed buffers, lot width, and building/lot coverage. The subject property is located at 1180 Upper Hembree Road south of the intersection at Upper Hembree Road and Harris Road.
- This item was considered at the March 7, 2024 Planning Commission meeting. There were three (3) public comments in support including the following comments: safety during demolition, dog park should be fenced, on-street parking, need more housing, property should be developed as mixed-use, identify tree saves, and can existing intersection handle traffic. After discussion, Planning Commission recommended approval subject to staff's recommended conditions (vote 6-0).
- Staff is recommending that Mayor and City Council approve CLUP-24-01/Z-24-04/V-24-04 Upper Hembree Tract/Empire Communities, subject to the following conditions:
    1. The 19.32-acre property shall be zoned 'R-8A/D' and shall be developed substantially as depicted on the site plan prepared by PEC, revised 3/22/24, except for modifications required to comply with these conditions. However, lot yield depicted is not guaranteed and subject to meeting all City code requirements and conditions of zoning.

2. The comprehensive land use plan designation of the property shall be 'High Density Residential'.
3. Maximum density shall not exceed 7.72 dwelling units per acre.
4. Minimum lot width shall be 31'.
5. Maximum building coverage shall not exceed 48% and impervious coverage shall not exceed 65%.
6. Architecture and materials shall be developed substantially similar to the submitted renderings, labeled Exhibit A - Renderings, subject to final approval by Staff.
7. To screen rooftops, a landscape buffer shall be provided along Upper Hembree Road as depicted in the site plan prepared by PEC, revised 3/22/24, with final approval by Staff. Developer shall work with City Staff and Georgia Power to identify appropriate landscape screening material where the buffer area overlaps utility easements. Existing trees shall be preserved, where possible, and the remaining area planted to City buffer standards, with final approval by Staff.
8. Minimum 15' planted buffer shall be provided along the west property line and along the south property line adjacent to Hembree Forest. Minimum 20' planted buffer shall be provided along the east property line and along the south property line adjacent to non-residential use. Existing trees shall be preserved, where possible, and the remaining area planted to City buffer standards, with final approval by Staff.
9. Developer shall enhance project entrance with a decorative planted median, decorative landscaping beds on each side of the entrance, and a unique monument or sculpture representative of the proposed community, as approved by Staff. Monument or sculpture shall be approved by the Cultural Arts Commission. Existing monument sign in the entrance median shall be removed.
10. Minimum 1.47 acres of open space shall be improved substantially as depicted on the plan prepared by PEC, revised 3/22/24. HOA shall be responsible for maintenance of all open space.
11. Privacy fences and unfinished wood decks shall not be visible from the public right-of-way.
12. Curb cut on the east side of the property shall be for fire and emergency access only and shall be gated, as approved by Staff.
13. Internal streets shall have a 4' planter and 5' sidewalk on one side of the street (not including alleys), as approved by Staff. Decorative pedestrian lighting shall be required throughout the development. Internal streets shall be private and maintained by the HOA.
14. Developer shall improve Upper Hembree Road streetscape with a min. 2' planter planted with a row of shrubs, 6' sidewalk, and street trees planted in the landscape

area behind the sidewalk, as approved by Staff. Developer shall remove existing acceleration lane east of the existing entrance and incorporate the area into the Upper Hembree Road streetscape. HOA shall be responsible for the maintenance of the landscape material in the planter. Streetscape shall include decorative pedestrian lighting. Offsite improvements shall be eligible for impact fee credits.

15. Minimum 10′ landscape strip shall be required along new internal streets as measured behind the sidewalk except in side yard conditions on corner lots. The minimum 10′ landscape strip shall not apply to alleys. Landscape strips and buffers shall be exclusive of utilities and easements except where necessary for utilities to cross landscape strips and buffers, with final approval by Staff. If Fulton County requires an unencumbered water line easement, shrubs shall replace trees on one side of the street.

16. Pedestrian amenities including sidewalks, lighting, and benches shall be included throughout the development and in amenity areas.

17. Developer shall save trees in the tree save area depicted on the site plan prepared by PEC, revised 3/22/24. In addition, developer shall save the trees in the triangular area at the existing entrance to the property.

18. Developer shall implement the recommendations of the submitted traffic impact study, with final approval by Staff. Developer shall be responsible for any necessary intersection or signal improvements at Upper Hembree Road and Harris Road. Any such offsite improvements not triggered by the development shall be eligible for impact fee credits.

19. Stormwater management facility shall be screened as depicted on the site plan prepared by Kimley Horn, dated 3/1/24, with final approval by Staff. Smart stormwater design techniques shall be employed to address run-off reduction, as approved by Staff.

20. Per mutual agreement, developer shall provide a privacy fence and evergreen trees along the south property line adjacent to Hembree Forest subdivision while protecting trees in the tree save area.

21. No more than 10% of the residential units shall be permitted to be rented, as recorded in the HOA's declarations and covenants.

- The proposed density is 7.72 dwelling units per acre.
- The property served as Harry's Farmers Market until 2014 before becoming the corporate offices and distribution center for Whole Foods. The existing building is approximately 145,000 square feet and the surface parking lot includes approximately 588 parking spaces.
- Surrounding properties are zoned O-I (Office-Institutional) to the west, C-1 (Neighborhood Commercial), R-15 (Dwelling, 'For-Sale', Residential), O-I, and O-P (Office-Professional) to the north, and City of Roswell to the south and east. Medical

and professional offices are located to the west, single-family detached home, Spirit of God Church, and professional offices are located to the north, flex office/warehouse are located to the east and south, and Hembree Forest subdivision is located to the south. The comprehensive land use plan designation of the property is 'Commercial'. The applicant proposes to change the future land use designation to 'High Density Residential'. The applicant states that the lot width reduction is needed in order to develop a detached product on the property.

- The submitted site plan depicts a 149-lot single-family detached subdivision with access from an existing signalized intersection at Upper Hembree Road and Harris Road. A 2nd curb cut is depicted at the northeast corner of the property but will be limited to fire and emergency access only and gated. Homes are proposed to be front- and rear-loaded, with 99 rear-loaded homes having a minimum lot size of 2,000 square feet and minimum lot width of 31' and 50 front-loaded homes having a minimum lot size of 4,500 square feet and minimum lot width of 38'. Homes around the perimeter of the property are proposed to be two (2) stories and the remaining homes will be three (3) stories. New internal streets and alleys will be private.
- Five-foot (5') sidewalks are depicted throughout the development, including a connection to the sidewalk along Upper Hembree Road. The sidewalk along Upper Hembree Road should be expanded to a minimum six feet (6'). A landscape buffer is depicted along Upper Hembree Road and fifteen-foot (15') replanted buffers are depicted along the east, west and south property lines.
- Unified Development Code (UDC) Parking regulations require two (2) parking spaces for each single-family detached home, as well as a minimum ten-foot (10') by eighteen-foot (18') driveway for a total of 447 parking spaces. Each home has two (2) side-by-side parking spaces in a garage, as well as two (2) spaces in the code-compliant driveway, for a total of 596 parking spaces. An additional 38 guest parking spaces are provided throughout the development.
- The site plan depicts approximately 4.9 acres of community space, including 1.47-acres of improved amenity space. Proposed community amenities include a pickleball court, dog park, pedestrian improvements, clubhouse and pool, community green, as well as several linear greenspaces fronted with homes.
- There are trees at the entrance to the property, as well as around the perimeter that could be saved. An existing stormwater pond on the south end of the property is proposed to be enlarged and heavily screened on all sides. The design of the existing stormwater pond does not allow the pond to be designed as an amenity for the proposed subdivision.
- Homes will range in size from 1,600 to 2,600 square feet with prices starting in the $600,000's. Renderings were provided by the applicant depicting two (2) and three (3) story homes with a Craftsman influence. Homes are depicted with a brick or stone 1st floor and siding, board and batten and/or shakes on the 2nd and 3rd floors.

Homes are proposed to have a recessed or covered front entry and most homes have a recessed or covered porch on the 2nd floor.

- The applicant provided a traffic impact study, including a trip generation report which estimates that the 149 single-family detached homes would generate 119 AM Peak Hour trips and 149 PM Peak Hour trips. According to the applicant, a grocery store would generate approximately 237 AM Peak Hour trips and 600 PM Peak Hour trips.
- The traffic impact study analyzed the intersections at Pointe Place (unsignalized), Harris Road/Site Driveway, and Alpharetta Highway along Upper Hembree Road. The study concluded that the signalized intersections will operate at an overall level of service "C" or better in both the AM and PM peak hours with the applicant's proposed development.
- Fulton County calculated the potential maximum number of children who may live on the property by using the Fulton County Schools standard calculation to identify the number of children that a residential development will generate. Based on the total figure for elementary, middle, and high school, it can be assumed that the proposed development could house approximately 28 – 151 school age children.
- The Citizen Participation Report submitted by the applicant states that letters were mailed to each property owner within 500' of the subject property stating the applicant's intent. The report states that no public comments were received as a result of the public notice mailing. However, the applicant noted that questions were raised by the public at the Community Zoning Information Meeting regarding traffic and impacts to surrounding properties. The applicant committed to meeting with an adjacent residential neighbor, inspecting an existing fence along the south property line, and review stormwater outlets from the existing detention pond. City Staff was contacted by a homeowner in Bellsmith Regency with concerns over traffic and density. The homeowner was placed in contact with the applicant.
- A Community Zoning Information Meeting was held on February 14, 2024. There were no public comments on the sign-in sheet.
- Staff has reviewed the applicant's proposal against the review criteria for a comprehensive land use plan amendment, rezoning and variance. The proposal to allow residential use is consistent with the character of the area which transitions from medical offices to residential uses. The requested R-8A/D zoning district has been approved at nearby subdivisions, including at Bellsmith Regency on Upper Hembree Road and Harris Walk at the corner of Harris Road and Rucker Road. Additionally, redevelopment of the property with a single-family detached subdivision would generate significantly fewer vehicular trips on the surrounding roadway network.
- The variance requests can be supported, given the geography of the property which transitions from medical office to residential use. The applicant demonstrated that a similar number of townhome units could be developed on the property. Therefore, the requested lot width reduction does not gain density and would allow for a detached

product. The proposed building/lot coverage to allow the cottage-home aesthetic that the developer desires will result in a reduction in impervious area on the site. If approved, conditions are recommended requiring a landscape buffer along Upper Hembree Road and aesthetic improvements at the project entrance.

- Kenneth Wood and Kevin North (Empire Homes, 350 Research Court, Peachtree Corners, GA 30092) came forward to speak on behalf of the applicant.

CITY COUNCIL DISCUSSION:

- Council Member Hipes asked about impact fees for this development and impacts to Public Safety.
    - Manager Woodman shared that has been considered and assessed for this plan.
- Council Member Mitchell asked about brick masonry on each building, and he expressed concerns about density and guest parking.
- Council Member DeRito expressed concerns about density, the width of the driveways for two vehicles to be parked side by side, the bright colors of the homes, and the distance between each home (especially from a stormwater perspective).

PUBLIC COMMENTS:

- Phyllis Goodrich (resident of Hembree Forest) came forward to speak in favor of this item.
- Gina Daunt (1555 Stelton Way, Alpharetta, GA 30004) came forward to speak on mutual aid for this subdivision.

❖ Mayor Pro Tem Merkel offered a motion to approve CLUP-24-01 / Z-24-04 / V-24-04 Upper Hembree Tract / Empire Communities, with the following conditions:

1. The 19.32-acre property shall be zoned 'R-8A/D' and shall be developed substantially as depicted on the site plan prepared by PEC, revised 3/22/24, except for modifications required to comply with these conditions. However, lot yield depicted is not guaranteed and subject to meeting all City code requirements and conditions of zoning.
2. The comprehensive land use plan designation of the property shall be 'High Density Residential'.
3. Maximum density shall not exceed 7.72 dwelling units per acre.
4. Minimum lot width shall be 31'.
5. Maximum building coverage shall not exceed 48% and impervious coverage shall not exceed 65%.

6. Architecture and materials shall be developed substantially similar to the submitted renderings, labeled Exhibit A - Renderings, subject to final approval by Staff.

7. To screen rooftops, a landscape buffer shall be provided along Upper Hembree Road as depicted in the site plan prepared by PEC, revised 3/22/24, with final approval by Staff. Developer shall work with City Staff and Georgia Power to identify appropriate landscape screening material where the buffer area overlaps utility easements. Existing trees shall be preserved, where possible, and the remaining area planted to City buffer standards, with final approval by Staff.

8. Minimum 15′ planted buffer shall be provided along the west property line and along the south property line adjacent to Hembree Forest. Minimum 20′ planted buffer shall be provided along the east property line and along the south property line adjacent to non-residential use. Existing trees shall be preserved, where possible, and the remaining area planted to City buffer standards, with final approval by Staff.

9. Developer shall enhance project entrance with a decorative planted median, decorative landscaping beds on each side of the entrance, and a unique monument or sculpture representative of the proposed community, as approved by Staff. Monument or sculpture shall be approved by the Cultural Arts Commission. Existing monument sign in the entrance median shall be removed.

10. Minimum 1.47 acres of open space shall be improved substantially as depicted on the plan prepared by PEC, revised 3/22/24. HOA shall be responsible for maintenance of all open space.

11. Privacy fences and unfinished wood decks shall not be visible from the public right-of-way.

12. Curb cut on the east side of the property shall be for fire and emergency access only and shall be gated, as approved by Staff.

13. Internal streets shall have a 4′ planter and 5′ sidewalk on one side of the street (not including alleys), as approved by Staff. Decorative pedestrian lighting shall be required throughout the development. Internal streets shall be private and maintained by the HOA.

14. Developer shall improve Upper Hembree Road streetscape with a min. 2′ planter planted with a row of shrubs, 6′ sidewalk, and street trees planted in the landscape area behind the sidewalk, as approved by Staff. Developer shall remove existing acceleration lane east of the existing entrance and incorporate the area into the Upper Hembree Road streetscape. HOA shall be responsible for the maintenance of the landscape material in the planter. Streetscape shall include decorative pedestrian lighting. Offsite improvements shall be eligible for impact fee credits.

15. Minimum 10′ landscape strip shall be required along new internal streets as measured behind the sidewalk except in side yard conditions on corner lots. The minimum 10′ landscape strip shall not apply to alleys. Landscape strips and buffers shall be exclusive of utilities and easements except where necessary for utilities to cross landscape strips and buffers, with final approval by Staff. If Fulton County requires an unencumbered water line easement, shrubs shall replace trees on one side of the street.

16. Pedestrian amenities including sidewalks, lighting, and benches shall be included throughout the development and in amenity areas.

17. Developer shall save trees in the tree save area depicted on the site plan prepared by PEC, revised 3/22/24. In addition, developer shall save the trees in the triangular area at the existing entrance to the property.

18. Developer shall implement the recommendations of the submitted traffic impact study, with final approval by Staff. Developer shall be responsible for any necessary intersection or signal improvements at Upper Hembree Road and Harris Road. Any such offsite improvements not triggered by the development shall be eligible for impact fee credits.

19. Stormwater management facility shall be screened as depicted on the site plan prepared by Kimley Horn, dated 3/1/24, with final approval by Staff. Smart stormwater design techniques shall be employed to address run-off reduction, as approved by Staff.

20. Per mutual agreement, developer shall provide a privacy fence and evergreen trees along the south property line adjacent to Hembree Forest subdivision while protecting trees in the tree save area.

21. No more than 10% of the residential units shall be permitted to be rented, as recorded in the HOA's declarations and covenants.

    - Council Member Mitchell seconded the motion.
    - Council Member Mitchell offered a friendly amendment for the applicant to change from 10 to 15 guest parking spaces and add a playground area for children some place within the greenspace area.
        - Mayor Pro Tem Merkel accepted the friendly amendment.
    - There was the following discussion during the motion:
        - Council Member Will expressed concerns about the density, reduction in buffers, and would like to see the plan redesigned with less homes.
        - Council Member Hipes shared that he could not support this; this project puts extra stress on public safety and the density

of this development is not in a walkable area of the community.

- Mayor Pro Tem Merkel shared that this site could be a distribution center and a lot of uses that the site could be, and this product is not necessarily something he would like to live in, but he is not the buyer. This could create an opportunity for more people to live in the City of Alpharetta, and he is not concerned with any impact to public safety, because this would create 149 new taxpayers to help offset public safety costs.
- Council Member DeRito shared that he has concerns about the density of this project, and there are definitely uses that could go into this site that council may not like, but are allowed under the current zoning. He would recommend tabling this item to allow the applicant to make some changes.
- Council Member Mitchell shared that he would support tabling this item. He would like for the developer to meet with school board to find a place for the school bus to pull into the development and to reduce density of the plan.
- Mayor Gilvin shared that he does support this project.

- Council Member Mitchell withdrew his second from the motion.
- Mayor Pro Tem Merkel withdrew his motion.

❖ Council Member Mitchell offered a motion to defer until April 29.

- Council Member DeRito seconded the motion.
- The motion was approved (5-1; with Mayor Gilvin in opposition).

B. E-24-01 Greco / 1530 Stelten Way Backyard Chickens

Consideration of an exception to allow backyard chickens on a property less than one (1) acre and with a chicken coop side setback of thirteen feet (13'). The chickens and associated structures are currently existing on the property. The subject property is located at 1530 Stelten Way in the Fuller Farms subdivision.

- Planning and Development Services Manager, Michael Woodman, came forward to present this item.
- The applicant, Hannah Greco, is requesting consideration of an exception to allow backyard chickens on a property less than one (1) acre and with a chicken coop side setback of thirteen feet (13'). The chickens and associated structures are currently

existing on the property. The subject property is located at 1530 Stelten Way in the Fuller Farms subdivision.

- Staff is recommending that Mayor and Council approve E-24-01 Greco/1530 Stelten Way Backyard Chickens, subject to the following conditions:

  1. Backyard chickens shall be permitted on a 0.47-acre property located at 1530 Stelten Way, subject to compliance with all related City regulations except as noted in the conditions below.
  2. Chicken coop shall be permitted as depicted on the submitted site plan with a 13' side setback.
  3. Exception to allow backyard chickens shall be limited to the current property owner.

- The City's Code Enforcement Division identified the non-conformity and notified the property owner of the need to resolve the matter.
- The 0.47-acre property is zoned R-15 (Dwelling, 'For-Sale', Residential) and is developed with a one (1) story, 1,590 square foot single-family detached home. Surrounding properties are zoned R-15 and located in the Fuller Farms subdivision, except that the property to the north is located in the Brierfield subdivision.
- Unified Development Code (UDC) Subsection 2.3.3, Accessory Uses and Structures, allows backyard chickens on minimum one (1) acre properties with a single-family detached dwelling. The regulations limit the number of backyard chickens to no more than six (6) hens, no roosters allowed, minimum 25' side and rear setbacks for structures associated with backyard chickens, and no chickens permitted within undisturbed stream buffers, wetlands, or floodplain.
- The submitted site plan depicts the existing chicken coop and run in the rear yard of the property and with a side yard setback of approximately thirteen feet (13') from the western side property line. The chicken coop and run are setback approximately 55' from the rear property line. The chicken coop is nine feet (9') by seven feet (7'), or 63 square feet, and the chicken run is eighteen feet (18') by fourteen feet (14'), or 252 square feet. Neither structure requires a building permit. There is a twenty-foot (20') visual screen, or landscape buffer, along the rear property line, which abuts Mid Broadwell Road. The buffer is heavily landscaped with evergreen material and includes a six-foot (6') tall berm. The applicant has six (6) hens and no roosters.
- The applicant notified all properties within 500' of the subject property and the Fuller Farms HOA regarding the request for exception and intent for the property. The applicant's report indicates that several members of the public reached out to express their support for the request. Two (2) people expressed concern that the chickens would attract wildlife to the area. Letters of support were provided from an adjacent property, 1520 Stelten Way, and Fuller Farms HOA.

- The Community Zoning Information Meeting was held on February 14, 2024. There were several public comments in support of the applicant's request.
- City Staff has reviewed the applicant's proposal and finds that the exception does not conflict with the established review criteria. Exceptions have been approved to allow backyard chickens on residential lots less than one (1) acre. An adjacent neighbor and the Fuller Farms HOA are in support of the applicant's request.

- The applicant, Hannah Greco (1530 Stelten Way, Alpharetta, GA 30004), came forward to speak on this application.
- City Administrator, Chris Lagerbloom, suggested a deferral of this item.

PUBLIC COMMENTS:

- John Courtney (120 Woodfield Lane, Alpharetta, GA 30009) came forward to speak against this application.

❖ Council Member Will offered a motion to defer this item until April 29.

  - Mayor Pro Tem Merkel seconded the motion.
  - The motion was approved unanimously (6-0).

7. NEW BUSINESS

A. GEMA and Homeland Security Grant Application for Alpharetta Public Safety Hazmat Unit

Consideration of approval of the Memorandum of Understanding between the City of Alpharetta and the Georgia Emergency Management Agency / Homeland Security, approval and authorization for the Alpharetta Department of Public Safety to submit a grant application for the 2024 State Homeland Security Program for Sub-Grant Funds, and with authorization for the Mayor to execute all necessary documents.

- Director of Public Safety, John Robison, came forward to present this item.
- If approve and a grant is awarded, the funds would maintain existing capabilities of Hazardous Materials (HazMat) Team. Georgia's HazMat Teams provides emergency service to local and regional areas in a coordinated effort, with all resources, to contain and neutralize, or minimize the disastrous effects of an accident involving hazardous materials/CBRNE. An emergency or disaster could result from hazardous and radiological materials being released into the environment. Georgia's HazMat Teams are to be equipped and properly trained to prevent, protect, and respond.
- The Alpharetta Regional HazMat Team was formed in 2004 and provides hazardous materials/CBRNE/illicit drug materials response services primarily to the cities of Alpharetta, Milton, Johns Creek, Roswell, and Sandy Springs. The Alpharetta Regional HazMat Team has fifteen active members, and they are responsible for testing and identifying all likely hazardous substances/CBRNE/illicit drug materials onsite; ensuring that responders have protective clothing and equipment; conducting

rescue operations to remove affected victims from the hazardous environment; conducting geographical survey searches of suspected sources or contamination spreads and establishing isolation perimeters; mitigating the effects of hazardous materials/CBRNE/illicit drug materials, decontaminating on-site victims, responders, and equipment; coordinating off-site decontamination with relevant agencies, and notifying environmental, health, and law enforcement agencies having jurisdiction for the incident to begin implementation of their standard evidence collection and investigation procedures.

- The Alpharetta Regional HazMat Team is seeking $ 206,700.00 to fund this existing HazMat program. The funding will be used to maintain our current response level and replace outdated equipment currently in service. This is a reimbursement grant, and no matching funds are required to receive the grant.

PUBLIC COMMENTS:

- There were no public comments.
  - Council Member Will offered a motion to approve the Memorandum of Understanding between the City of Alpharetta and the Georgia Emergency Management Agency / Homeland Security, approval and authorization for the Alpharetta Department of Public Safety to submit a grant application for the 2024 State Homeland Security Program for Sub-Grant Funds, and authorize the Mayor to execute all necessary documents.
    - Council Member Mitchell seconded the motion.
    - The motion was approved unanimously (5-0; as Council Member Hipes was not present during this item).

B. Resolution: Authorizing the Use of Eminent Domain for Parcel 15 of the Webb Bridge Road Improvements Project

Consideration of a Resolution of the Mayor and Council of the City of Alpharetta, Georgia to condemn property interest in Tax Parcel # 21-5593-1239-006-6 (Parcel owners: Tina A. Smith and Windward Community Services Association, Inc.) of the Webb Bridge Road Improvements Project with authorization for the Mayor to execute documents in furtherance of same; estimated just and adequate compensation: $11,900.00.

- City Attorney, Molly Esswein, came forward to present this item.
- City Attorney Esswein read the resolution title aloud.
- The City has determined that it is necessary to condemn property of Tax Parcel # 21 - 5593-1239-006-6 in furtherance of the Webb Bridge Road Bike and Pedestrian Improvements Project.
- Approval of this resolution will authorize the City Attorney's Office to acquire, through the use of Eminent Domain, the necessary property rights to, in, over, under, through

and across the property owned by Tina A. Smith and Windward Community Services Association, Inc. on Webb Bridge Road (Tax Parcel No.: 21 -5593-1239-006-6) in order to ensure the timely completion of this project.

PUBLIC COMMENTS:

- There were no public comments.
  - ❖ Mayor Pro Tem Merkel offered a motion to approve a resolution of the Mayor and Council of the City of Alpharetta, Georgia to condemn property interest in Tax Parcel #21-5593-1239-006-6 (Parcel owners: Tina A. Smith and Windward Community Services Association, Inc.) of the Webb Bridge Road Improvements Project with authorization for the Mayor to execute documents in furtherance of same; estimated just and adequate compensation: $11,900.00.
    - o Council Member DeRito seconded the motion.
    - o The motion was approved unanimously (5-0; as Council Member Will was not present during the motion).

C. Resolution: Authorizing the Use of Eminent Domain for Parcel 18 of the Webb Bridge Road Improvements Project

Consideration of a Resolution of the Mayor and Council of the City of Alpharetta, Georgia to condemn property interest in Tax Parcel #21-5593-1239-056-4 (Parcel Owners: Westerra Windward, LLC and Windward Community Services Association, Inc.) of the Webb Bridge Road Improvements Project with authorization for the Mayor to execute documents in furtherance of same; estimated just and adequate compensation: $8,700.00).

- City Attorney, Molly Esswein, came forward to present this item.
- City Attorney Esswein read the resolution title aloud.
- The City has determined that it is necessary to condemn property of Tax Parcel # 21 -5593-1239-056-4 in furtherance of the Webb Bridge Road Bike and Pedestrian Improvements Project.
- Approval of this resolution will authorize the City Attorney's Office to acquire, through the use of Eminent Domain, the necessary property rights to, in, over, under, through and across the property owned by Westerra Windward, LLC on Webb Bridge Road (Tax Parcel No.: 21 -5593-1239-056-4) in order to ensure the timely completion of this project.

PUBLIC COMMENTS:

- There were no public comments.
  - ❖ Council Member Hipes offered a motion to approve a resolution of the Mayor and Council of the City of Alpharetta, Georgia to condemn property

interest in Tax Parcel #21-5593-1239-056-4 (Parcel Owners: Westerra Windward, LLC and Windward Community Services Association, Inc.) of the Webb Bridge Road Improvements Project with authorization for the Mayor to execute documents in furtherance of same; estimated just and adequate compensation: $8,700.00).

- Council Member Will seconded the motion.
- The motion was approved unanimously (6-0).

D. **Requests for Proposals 22-114 and 24-105: Premier Events Contract Addendum Approvals – Wire and Wood & Taste of Alpharetta Event Concessions**

Consideration and approval of addendums to the existing Premier Events, LLC event management contracts to permit beverage concessions for the annual Taste of Alpharetta and Wire & Wood events.

- Director of Recreation, Parks and Cultural Services, Morgan Rodgers, came forward to present this item.
- With Premier Events being contracted to manage event operations and sell sponsorships for both the Taste of Alpharetta (through 2028) and Wire & Wood (through 2027) events, staff recommends streamlining concessions management under one company. Premier Events, LLC was highly successful in securing beverage sponsorship for Wire & Wood 2023 and has a history of being a successful beverage provider for Wire & Wood for several years prior to 2020.
- Benefits to the City and events having Premier Events, LLC be the concession provider are:
  - Assist the City by measuring the average revenue generated by beverage sales at its events and profit shares can be calculated to help offset operating costs.
  - Financial transactions and reporting will be on one system through Grub Box ticket sales that Premier Events, LLC utilizes for all sales, as opposed to a separate vendor having their own point of sale system. Prevents confusion for the public, not being able to use the Grub Box ticketing system for concession sales, and the reporting of revenues back to the City if all under the same system.
  - 35% of after-tax gross sales is a competitive rate by industry standards and the addition of Premier Events, LLC concession services adds no additional cost to the City of Alpharetta.

    a. Previous Premier Events LLC- W & W 2023= 30%

    b.Top Job - TOA 2022 & 2023= 35%

    c. Average industry percentage range low to high, 20%-40% dependent upon vendor and event.

PUBLIC COMMENTS:

- There were no public comments.

- Council Member Hipes offered a motion to approve addendums to the existing Premier Events, LLC event management contracts to permit beverage concessions for the annual Taste of Alpharetta and Wire & Wood.
    - Council Member Mitchell seconded the motion.
    - The motion was approved unanimously (6-0).

8. PUBLIC COMMENT

- There were no public comments.

9. REPORTS

- There were no public comments.

10. EXECUTIVE SESSION (IF NECESSARY)

- Council Member Hipes offered a motion to recess to Executive Session for the purposes of litigation.
    - Mayor Pro Tem Merkel seconded the motion.
    - The motion was approved unanimously (6-0).
- Mayor Gilvin recessed the meeting at 8:21 p.m.
- Council Member DeRito offered a motion to reconvene the meeting.
    - Council Member Will seconded the motion.
    - The motion was approved unanimously (6-0).
- Mayor Gilvin recessed the meeting at 8:28 p.m.

11. ADJOURNMENT

- Council Member Mitchell offered a motion to adjourn the meeting.
    - Mayor Pro Tem Merkel seconded the motion.
    - The motion was approved unanimously (6-0).

- With there being no further items to consider or discuss, Mayor Gilvin adjourned the meeting at 8:29 p.m.

Respectfully submitted,

Lauren Shapiro

Lauren Shapiro, City Clerk

STAFF REPORT

Department: City Clerk
Submitted By: Lauren Shapiro
Meeting Date: April 15, 2024

AGENDA ITEM:

Alcoholic Beverage License Application
Consideration of approval of the following alcoholic beverage license application:

1. PH-24-AB-05 RHE 01, LLC d/b/a The Metropolitan Club
5895 Windward Parkway, Suite 100, Alpharetta, GA 30005

Change in Ownership
Eating Establishment
Consumption on Premises
Distilled Spirits, Beer, Wine & Sunday Sales
Owner: RHE 01, LLC
Registered Agent: Sunil Reddy

STAFF RECOMMENDATION:

Approve the following alcoholic beverage license application as part of the Consent Agenda:
1. PH-24-AB-05 RHE 01, LLC, d/b/a The Metropolitan Club, 5895 Windward Parkway, Suite 100, Alpharetta, GA 30005

BUDGET & PROCUREMENT:

BUDGETED ITEM: NO
FISCAL IMPACT: NO
INCLUDED IN CURRENT FY CPTL BUDGET: NO
INCLUDED IN CURRENT FY OPRT. BUDGET: NO
TOTAL PROJECT COST:
APPROPRIATIONS:

ACCOUNT TITLE/NUMBER	DOLLAR AMOUNT

EXTERNAL FUNDING SOURCES:

ACCOUNT TITLE/NUMBER	DOLLAR AMOUNT

ITEM DESCRIPTION:

The above referenced Alcoholic Beverage License Application was heard and considered during a virtual Alcohol License Public Hearing on April 8, 2024. There were no public comments during the hearing. At the conclusion of the hearing, City Clerk Lauren Shapiro, recommended approval and forwarded the above referenced application to City Council for final approval.

ALTERNATIVES:

Do not approve the license application

ATTACHMENTS:

1. Alcohol License Public Hearing Minutes 4-8-2024

ALCOHOL LICENSE PUBLIC HEARING
APRIL 8, 2024

ALPHARETTA CITY CLERK'S OFFICE
VIRTUAL MEETING VIA ZOOM
CITY CLERK: LSHAPIRO@ALPHARETTA.GA.US
ASSISTANT CITY CLERK: KVANHORN@ALPHARETTA.GA.US

2:00 PM

I. VIRTUAL MEETING ZOOM LINK

The City of Alpharetta's Alcohol License Public Hearings are a virtual meeting via Zoom. The meeting begins at 2:00 p.m. on the day of the scheduled hearing. To join the meeting, please click on this link: https://zoom.us

Zoom Meeting ID: 867 0907 6198

II. CALL TO ORDER

- City Clerk Lauren Shapiro called the meeting to order at 2:02 p.m.

III. ROLL CALL

- Lauren Shapiro, City Clerk
- Kiersten VanHorn, Assistant City Clerk
- Jacob O'Donnell, Code Enforcement Supervisor
- Sunil Reddy, Owner and Registered Agent for RHE 01, LLC

IV. PUBLIC HEARING

A. PH-24-AB-05 RHE 01, LLC d/b/a The Metropolitan Club
5895 Windward Parkway, Suite 100
Alpharetta, GA 30005

Change in Ownership
Eating Establishment
Consumption on Premises
Distilled Spirits, Beer, Wine & Sunday Sales

Owner: RHE 01, LLC
Registered Agent: Sunil Reddy

- Mr. Sunil Reddy, Owner and Registered Agent for RHE 01, LLC, was on the call. The address provided for RHE 01, LLC is 4975 Riverfield Drive, Peachtree Corners, GA 30092.
- Mr. Reddy stated the ownership change took place in January 2024. They are seeking a consumption on premises license with distilled spirits, beer, wine & Sunday sales.
- Mr. Reddy said the same employees are still there and all those serving alcohol have their pouring permits. They do anticipate hiring additional staff in the future and all will have the required pouring permits.
- Mr. Reddy stated this is their only business in Alpharetta.

- Ms. Shapiro confirmed that City staff has reviewed the application and that it meets all the City's requirements for an alcohol license. Ms. Shapiro recommended the application be approved and advised the applicant that a representative will need to appear in person at the Alpharetta City Council meeting on Monday, April 15, 2024, at 6:30 pm in case Mayor or Council have any questions.

V. PUBLIC COMMENT

- There were no public comments.

VI. ADJOURNMENT

- City Clerk Lauren Shapiro adjourned the hearing at 2:08 p.m.

Respectfully submitted,

Kiersten VanHorn

Kiersten VanHorn, Assistant City Clerk

CITY OF ALPHARETTA

REPORT FOR SURVEY FOR ALCOHOLIC BEVERAGE LICENSE

TO: Alcoholic Beverage Permitting - Department of Community Development

DATE: JULY 20, 2023

APPLICANT:

TRADE NAME: THE METROPOLITAN CLUB

ADDRESS: 5895 WINDWARD PARKWAY CITY: ALPHARETTA STATE: GA ZIP: 30005

The undersigned has examined the subject location and has made measurements to determine the compliance or noncompliance with distance requirement of the Code Of The City Of Alpharetta, Georgia, as follows:

1. _____ feet to the NONE LOCATED WITHIN 200' OF SITE.
(private) residence located at _____

2. 2840 feet to the BUS STOP
(regular) school bus stop as designated by the Fulton County Board of Education** where five (5) or more children board the bus and which is located at 3553 STRATH DRIVE

** This information can be obtained by faxing your request to "North Transportation: Fulton Board of Education" at 470-254-2978. List type of application applied for, name of company, owner of company, street address, your phone number, and name and information requested.

Distance requirements are defined in Section 4-17 and Section 4-398 of the Code of the City of Alpharetta.

3. 10,500 feet to the NORTH POINT COMMUNITY CHURCH
(church or other place used primarily for religious service) located at 4350 NORTH POINT PARKWAY

4. 12,700 feet to the ALPHARETTA LIBRARY
(public library or branch thereof) located at 10 PARK PLAZA

5. 780 feet to the WINDWARD CHILD DEVELOPMENT CENTER
(school ground or college campus) located at 5830 WINDWARD PARKWAY

6. 9090 feet to the WINDWARD COMMUNITY PARK
(portion of public park habitually used for recreational purposes) located at 6435 WINDWARD PARKWAY.

Distance requirements are defined in Section 4-17 and Section 4-398 of the Code of the City of Alpharetta. Please review these sections of the City Code prior to executing this document below. Any distance requirements required by State of Georgia law, such as the minimum distance between package stores, must also be shown on the survey.

In my opinion, the premises indicated above meets the distance requirements for licensing as prescribed by the Code of the City of Alpharetta, Georgia.

Signature of Georgia Registered Land Surveyor

1751
Surveyor Number

NOTE: A survey showing the distance to the use described above must be attached to this form at the time of submittal.

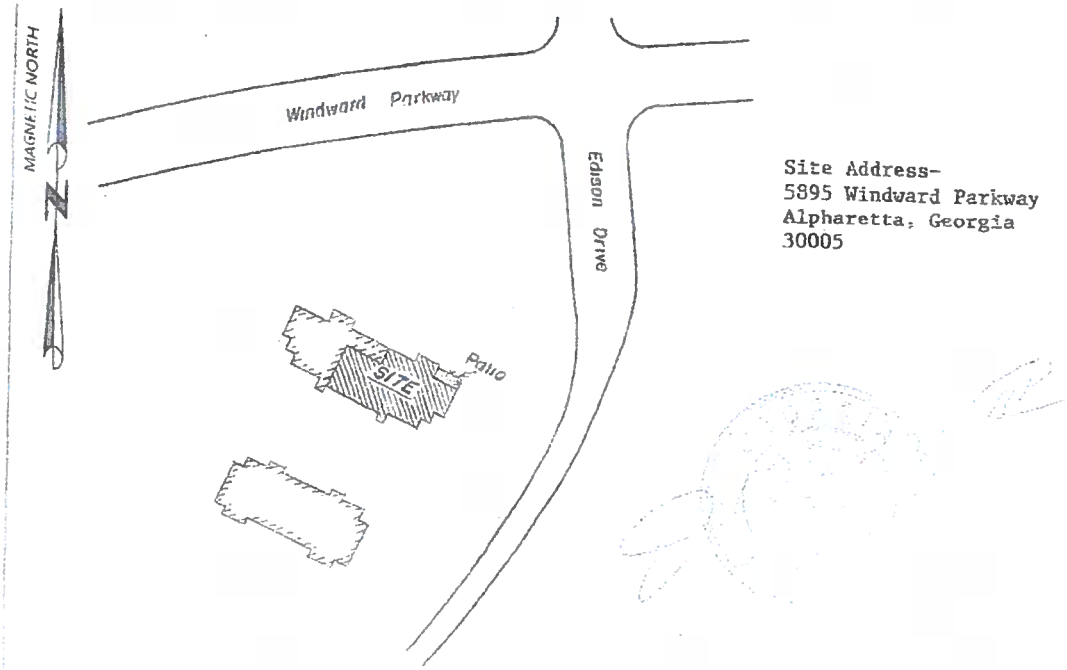

Site Address-
5895 Windward Parkway
Alpharetta, Georgia
30005

The following distances were measured in a straight line, per City of Alpharetta code:

CHURCH- 10500' to North Point Community Church, @ 4350 North Point Parkway.

SCHOOL- 780' to Windward Child Development Center, @ 5830 Windward Parkway.

LIBRARY- 12700' to Alpharetta Library, @ 10 Park Plaza.

PARK- 9090' to Windward Community Park, @ 6435 Windward Parkway.

RESIDENCE- None within 200' of this site.

SCHOOL BUS STOP- 2640' to stop @ 3553 Strath Drive.

City of Alpharetta Alcoholic Beverage Consumption on the Premises License Survey for:

The Metropolitan Club

DATE: 7/20/2023	SCALE: 1" = 200'	0 50 100 200 GRAPHIC SCALE IN FEET
DRAWN BY: GD		
LAND LOT 1113	2nd DISTRICT	2nd SECTION
FULTON COUNTY		GEORGIA
GEORGIA LAND SURVEYING CO. 155 CLIFTWOOD DRIVE, ATLANTA, GA 30328 PHONE (404)255-4671 FAX (404)255-6607 WWW.GEORGIALANDSURVEYING.COM		204543

STAFF REPORT

Department: Public Works
Submitted By: Pam Bush
Meeting Date: April 15, 2024

AGENDA ITEM:

Invitation to Bid 24-018: Contract Award for Windward Parkway Drainage Improvements
Consideration of approval of a contract award of ITB 24-018 to Backbone Infrastructure, LLC for the construction of drainage improvements along Windward Parkway for an amount not to exceed $383,506.00 and with authorization for the Mayor to execute all necessary documents.

STAFF RECOMMENDATION:

Approve the contract award of ITB 24-018 to Backbone Infrastructure, LLC for the construction of drainage improvements along Windward Parkway for an amount not to exceed $383,506.00 and authorize the Mayor to execute all necessary documents.

BUDGET & PROCUREMENT:

BUDGETED ITEM: YES

FISCAL IMPACT: YES

INCLUDED IN CURRENT FY CPTL BUDGET: YES

INCLUDED IN CURRENT FY OPRT. BUDGET: NO

TOTAL PROJECT COST: $383,506.00

APPROPRIATIONS:

ACCOUNT TITLE/NUMBER	DOLLAR AMOUNT
Windward Parkway Improvements/ 33641100-541410-C2226	$383,506.00

EXTERNAL FUNDING SOURCES:

ACCOUNT TITLE/NUMBER	DOLLAR AMOUNT
N/A	$0.00

ITEM DESCRIPTION:

Background: The Windward Parkway Drainage Improvement Project is part of an overall project to increase pedestrian access to the Greenway. This project includes the replacement of storm structures and redirection of storm runoff to alleviate erosion issues downstream of the bridge across Big Creek. The overall project includes construction of a sidewalk from the Greenway tunnel to Big Creek, pedestrian bridges at Big Creek and the unnamed tributary of Big Creek to the east, and drainage improvements along Windward Parkway frontages of 1000, 1005, 2015 and 2025 Compass Pointe Drive.

The item under consideration is the award of a contract for complete construction of the Windward Parkway Drainage Improvements project. The project scope includes, but is not limited to, furnishing of all materials, labor, and equipment, to perform demolition and reconstruction of existing sidewalk, installation of storm sewer system materials (including but not limited to structures, pipe, and bedding), installation of curb and gutter, tree removal, grading, utility re-location, erosion control, traffic control, and stabilization of disturbed soils.

Project construction is anticipated to take 15 months from the issuance of a notice to proceed.

Procurement and Project Bid Process: Procurement for this project was initiated through Invitation to Bid (ITB 24-018), that was issued on February 1, 2024, with a response deadline of February 29, 2024. A total of six proposals were received in response to this invitation:

Company/Bidder	Proposed Price
Backbone Infrastructure LLC	$383,506.00
Helix Grading & Utility LLC	$389,508.97
Sol Construction LLC	$399,855.50
Vertical Earth, Inc	$399,966.45
Baldwin Paving Company, Inc	$510,382.99
Summit construction & development LLC	$593,023.00

After evaluation and verifying the submitted bids, staff from the Public Works Department met with representatives of Backbone Infrastructure LLC (Backbone), as the low bidder, on Wednesday, March 20, 2024. The project scope, schedule, and bid package as submitted by Backbone were discussed with the contractor during the meeting. Backbone is an experienced contractor that has successfully completed projects for multiple local governments.

ALTERNATIVES:

Do not approve the award of a contract to Backbone Infrastructure, LLC, and drainage improvements will be postponed to a future date.

ATTACHMENTS:

1. Windward Drainage Improvement
2. 24-018 Backbone Infrastructure-Contract

NOTE:
1. 8-FT TRAIL AND BRIDGE SHALL HAVE 4" SKIP-YELLOW PAINTED CENTERLINE. NOT SHOWN FOR GRAPHIC CLARITY.
2. REQ'D RIGHT-OF-WAY AND EASEMENT POINTS STATION/OFFSET NOT SHOWN FOR GRAPHIC CLARITY. SEE RIGHT OF WAY PLANS FOR POINTS STATION AND OFFSET.

(XX) OBJECT MARKER MUTCD SIGN: OM3-R (6" X 18") ATTACH TO THE PEDESTRIAN BRIDGE

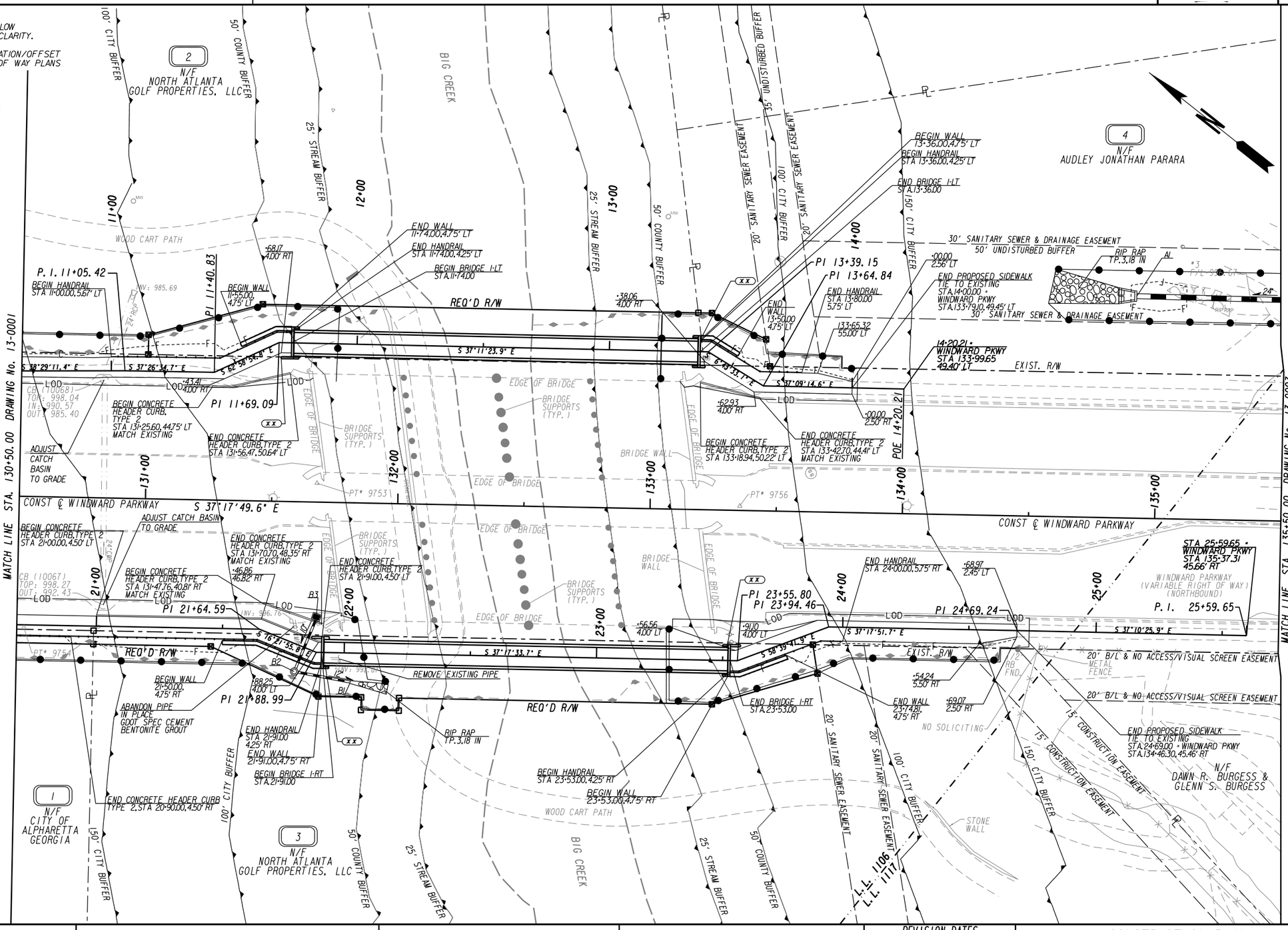

PT #	N	E	ELEV
9754	1488232.0471	2276209.5218	998.96
9753	1488176.6250	2276326.5302	998.81
9756	1488039.7448	2276423.5684	1001.52

PROPERTY AND EXISTING R/W LINE
REQUIRED R/W LINE
CONSTRUCTION LIMITS
EASEMENT FOR CONSTR & MAINTENANCE OF SLOPES
EASEMENT FOR CONSTR OF SLOPES
EASEMENT FOR CONSTR OF DRIVES

BEGIN LIMIT OF ACCESS.....BLA
END LIMIT OF ACCESS.....ELA
LIMIT OF ACCESS
REQ'D R/W & LIMIT OF ACCESS
ORANGE BARRIER FENCE
ESA - ENV. SENSITIVE AREA (SEE ERIT TABLE)

moffatt & nichol

SCALE IN FEET
0 20 40 80

REVISION DATES

CONSTRUCTION PLAN
WINDWARD PARKWAY
PEDESTRIAN BRIDGES AT BIG CREEK

CHECKED:	DATE:	DRAWING No.
BACKCHECKED:	DATE:	13-0002
CORRECTED:	DATE:	
VERIFIED:	DATE:	

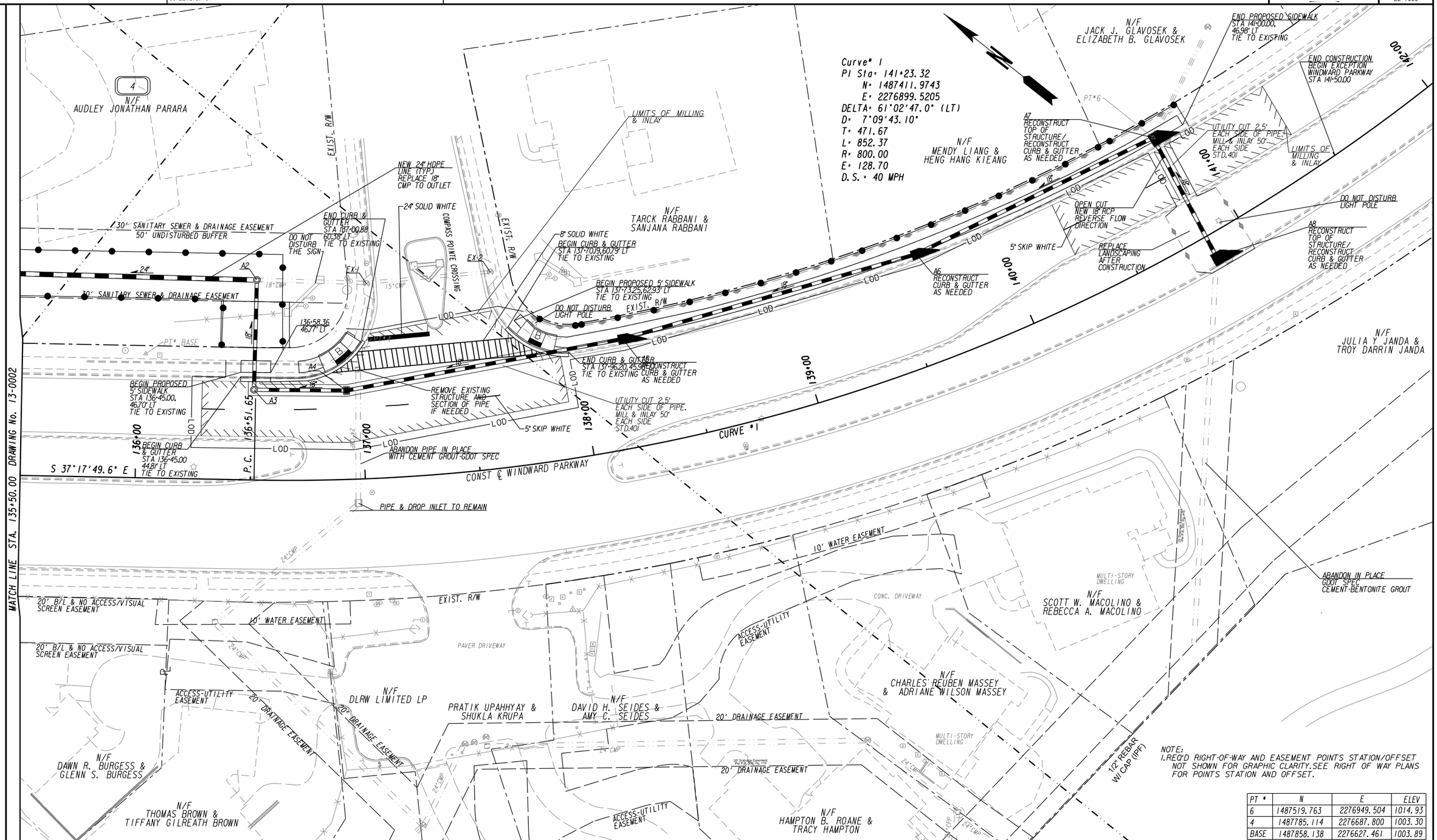

NOTE:
1. REQ'D RIGHT-OF-WAY AND EASEMENT POINTS STATION/OFFSET NOT SHOWN FOR GRAPHIC CLARITY. SEE RIGHT OF WAY PLANS FOR POINTS STATION AND OFFSET.

PT #	N	E	ELEV
6	1487519.763	2276949.504	1014.93
4	1487785.114	2276687.800	1003.30
BASE	1487858.138	2276627.461	1003.89

PROPERTY AND EXISTING R/W LINE
REQUIRED R/W LINE
CONSTRUCTION LIMITS
EASEMENT FOR CONSTR & MAINTENANCE OF SLOPES
EASEMENT FOR CONSTR OF SLOPES
EASEMENT FOR CONSTR OF DRIVES

BEGIN LIMIT OF ACCESS.....BLA
END LIMIT OF ACCESS.....ELA
LIMIT OF ACCESS
REQ'D R/W & LIMIT OF ACCESS
ORANGE BARRIER FENCE
ESA - ENV. SENSITIVE AREA (SEE ERIT TABLE)

moffatt & nichol

SCALE IN FEET
0 20 40 80

REVISION DATES

CONSTRUCTION PLAN
WINDWARD PARKWAY
DRAINAGE MODIFICATION

CHECKED:		DATE:	
BACKCHECKED:		DATE:	
CORRECTED:		DATE:	
VERIFIED:		DATE:	

DRAWING No. 13-0003

CONTRACT AGREEMENT
WINDWARD PARKWAY DRAINAGE IMPROVEMENTS
(INVITATION TO BID NO. 24-018)

THIS AGREEMENT made by, and between, **CITY OF ALPHARETTA, GEORGIA**, a municipal corporation of the State of Georgia (hereinafter, the "CITY"), and BACKBONE INFRASTRUCTURE, LLC, a limited liability company with its principal office located at 4805 Westoak Court, Buford, GA, 30518 (hereinafter, "CONTRACTOR").

WITNESSETH: that for and in consideration of the payments to be made by the CITY, and for other good and valuable consideration, the receipt and legal sufficiency of which is hereby acknowledged, the CONTRACTOR hereby agrees to commence and complete the construction project described as follows: -

> **WINDWARD PARKWAY DRAINAGE IMPROVEMENTS** (the "Project") includes, but is not limited to, demolition and reconstruction of existing sidewalk, demolition of existing storm sewer system materials, installation of proposed storm sewer system materials (including but not limited to structures, pipe, and bedding), installation of curb and gutter, tree removal, grading, utility re-location, erosion control, traffic control, stabilization of disturbed soils, and related work. The location of work is along the Windward Parkway frontages of 1000, 1005, 2015 and 2025 Compass Pointe Drive, all within the City of Alpharetta.

For CONTRACTOR'S performance and completion of the Project (as defined in Appendix A: General Conditions set forth in ITB No. 24-018 (the "General Conditions")), CITY shall pay CONTRACTOR a fee in accordance with the unit costs established in CONTRACTOR'S Bid and as finally awarded by the City for a total sum not to exceed THREE HUNDRED EIGHTY-THREE THOUSAND, FIVE HUNDRED SIX DOLLARS**. ($383,506.00)**. At CONTRACTOR's own cost and expense, CONTRACTOR shall furnish all materials, supplies, machinery, equipment, tools, superintendence, labor, insurance, and other accessories and services necessary or convenient to the successful completion of the Project and the carrying out of all duties and obligations in accordance with the terms and conditions set forth in ITB No. 24-018 and the General Conditions contained therein, CONTRACTOR'S Bid, the GDOT 2021 Standard Specifications as modified by the GDOT 2024 Supplemental Specifications and the Special Provisions contained therein, including any technical specifications for the Project, the plans and specifications, including all explanatory matter thereof, and the other contract documents as enumerated in Section 101.16 of the General Conditions, all of which (the "Contract Documents") are made a part hereof and collectively constitute the agreements and obligations of the parties under this Contract (the "Work").

The CITY agrees to pay CONTRACTOR in current funds for the performance of the Work subject to additions and deductions as provided in the General Conditions, and to make payments on account thereof as provided in Section 109 of the General Conditions.

In the event of any delay which is not the fault or responsibility of CONTRACTOR or any supplier to CONTRACTOR, CONTRACTOR is entitled to additional days for performance of this Contract (not to exceed fifteen (15) days from the date of completion set forth in this Contract). CONTRACTOR shall not be entitled to any additional money for any delay which it encounters. CONTRACTOR's sole remedy shall be to obtain an extension of time within which this Contract

is to be performed. Under no circumstances shall CONTRACTOR be entitled to assert any claim of entitlement against the CITY for actual or consequential damages resulting from delays.

Upon CONTRACTOR's breach of any material provision of this Contract which breach remains uncured after ten (10) days written notice of default, the CITY may terminate this Contract without liability for further payment of amounts due or to become due under this Contract. Termination shall be in addition to, and not in lieu of, any other remedies available to the CITY under this Contract or applicable law, including making of claims under CONTRACTOR's bonds. Upon the CITY's breach of any material provision of this Contract, which breach remains uncured after ten (10) days written notice of default, CONTRACTOR shall be entitled to terminate this Contract or pursue such other remedies, not inconsistent with this Contract, as it may have in law or equity. This Contract may also be terminated or suspended by the CITY for CITY's convenience upon not less than seven (7) days written notice to CONTRACTOR. In the event of such termination, CONTRACTOR shall be compensated for services performed through the date of termination, together with any reimbursable expenses then due. Any termination of this Contract by the CITY for an alleged default which is ultimately held unjustified shall automatically be deemed to be a termination for convenience.

This Contract was awarded and is contingent upon CONTRACTOR's compliance with O.C.G.A. § 13-10-91 and Chapter 300-10-1 of the Rules of the Georgia Department of Labor, and CONTRACTOR's certification to the CITY that it has registered and currently participates in the federal work authorization program to verify employment eligibility of all newly hired employees. Further, as part of any approved subcontracting agreement, CONTRACTOR has certified that any subcontractor entering into this Contract for the physical performance of services within this State is in compliance with O.C.G.A. § 13-10-91 and Chapter 300-10-1 of the Rules of the Georgia Department of Labor and has registered and currently participates in the federal work authorization program to verify employment eligibility of all newly hired employees. This Contract may be suspended or terminated if it is determined that CONTRACTOR has made a false certification or has violated such certification by failure to carry out this requirement.

CONTRACTOR shall maintain the types and amounts of insurance set forth in the ITB and the General Conditions, and as otherwise reasonably required by the CITY from time to time. CONTRACTOR shall provide proof of such insurance to the CITY contemporaneously with the execution of this Contract, and as and when requested by the CITY during the term hereof. Acceptance of a certificate or proof of insurance does not constitute approval or agreement by the CITY that the insurance requirements have been satisfied. CONTRACTOR shall indemnify and hold the CITY harmless from all claims, demands, losses, attorneys' fees and liabilities of any type or nature arising out of or related to CONTRACTOR's, or CONTRACTOR's agents', employees' or subcontractors', performance or non-performance of this Contract, including, but not limited to, claims for injury to person or property; provided, however, that this indemnification obligation shall not apply to claims arising from the sole negligence of the CITY or its employees. Nothing in this paragraph or this Contract shall be deemed to constitute a waiver of the CITY's sovereign immunity, create rights in any third party, or create any third-party beneficiaries.

The provisions of this Contract and the Contract Documents constitute the entire Contract between the parties, and all prior discussions and agreements are merged herein. This Contract is expressly intended to supersede all provisions of the Georgia Prompt Pay Act.

Any dispute arising in connection with the interpretation of this Contract, or the performance of any party under this Contract or any claim or dispute under this Contract or otherwise related to this Contract shall, at the sole option of the CITY, be referred to binding arbitration in Atlanta, Georgia in accordance with the Commercial Arbitration Rules of the American Arbitration Association.

The CONTRACTOR shall promptly commence the Work with adequate force and equipment **within ten (10) calendar days** from receipt of the Notice to Proceed, or as may be specified by the Special Provisions, continuously pursue the Work without interruption to completion, and fully complete the Work within **300 calendar days from the Notice to Proceed.**

This Contract may be executed in one or more counterparts, each of which shall be deemed an original, but all of which shall together constitute one (1) and the same instrument. This Contract may be executed by electronic signature, and such signature shall have the same validity and effect as a signature affixed by hand and shall constitute an original for all purposes.

IN WITNESS WHEREOF, the parties hereto have each caused this Contract to be executed and delivered by a duly authorized officer, agent or official as of the date set forth below.

Executed _____

CITY OF ALPHARETTA, GEORGIA

By: _____

Jim Gilvin, Mayor

Approved as to Content:

_____

Chris Lagerbloom, City Administrator

Approved as to form and Legal Sufficiency:

_____

Ed Howden, City Attorney

BACKBONE INFRASTRUCTURE, LLC

By: _____

Ritvik Kakadia, Member

STAFF REPORT

Department: Public Works
Submitted By: Geoffrey Sarra
Meeting Date: April 15, 2024

AGENDA ITEM:

Invitation to Bid 24-013: Webb Bridge Park Sanitary Sewer Connection
Consideration of approval of a contract award for ITB 24-013 to Sol Construction, LLC for the construction of Webb Bridge Park Sewer Connection in an amount not to exceed $423,732.00 and with authorization for the Mayor to execute all necessary documents.

STAFF RECOMMENDATION:

Approve the award of a contract for ITB 24-013 to Sol Construction, LLC for the construction of Webb Bridge Park Sanitary Sewer Connection in an amount not to exceed $423,732.00 and authorize the Mayor to execute all necessary documents.

BUDGET & PROCUREMENT:

BUDGETED ITEM: YES
FISCAL IMPACT: YES
INCLUDED IN CURRENT FY CPTL BUDGET: YES
INCLUDED IN CURRENT FY OPRT. BUDGET: NO
TOTAL PROJECT COST: $423,732.00
APPROPRIATIONS:

ACCOUNT TITLE/NUMBER	DOLLAR AMOUNT
Webb Bridge Park Sewer / 30141100-544200-C2408	$370,075.00
Contingency / 30190200-579000	$53,657

EXTERNAL FUNDING SOURCES:

ACCOUNT TITLE/NUMBER	DOLLAR AMOUNT
N/A	$0.00
N/A	$0.00

ITEM DESCRIPTION:

Background:
As conceptual design work for the conversion of the upper soccer fields to a synthetic surface progressed, it was determined that the existing septic system servicing the soccer field restroom building has failed. Existing soil conditions combined with the desired synthetic turf field footprint are not conducive to installing a new septic system. Thus, it was determined that connecting the restroom to Fulton County's sanitary sewer system would be the best long-term solution. Public Works staff investigated potential tie-in points to the County's system and developed a conceptual sewer alignment which would connect to an existing sanitary sewer manhole within the right of way of Webb Bridge Road, opposite the park entrance. On June 19, 2023, the City awarded a contract to Prime Engineering for the design and permitting of the sewer connection. The plans were approved by Fulton County on December 12, 2023.

The award of ITB #24-013 is for the construction of a sanitary sewer connection from the Webb Bridge Park soccer field restroom building to Fulton County's sanitary sewer system. The sewer connection will be achieved through the installation of a low-pressure force main system. The scope of work includes the installation of a pump station adjacent to the restroom building and approximately 1600 linear feet of HDPE force main.

The pump station specified for this project consists of two grinder pumps. The tank is made from tough, corrosion-resistant polyethylene and provides 150 gallons of capacity. The pumps grind waste into a fine slurry before

pumping it to the sewer system. The pumps are activated using integrated level-sensing pressure switches instead of floats. The pump station can accommodate flows of 3000 gallons per day. The pumps are covered by a 5-year parts and labor warranty. No preventive maintenance schedule is needed.

Prior to advertising the project for construction, the pump station vendor provided a demonstration of the grinding capabilities of the pumps to city staff, demonstrating their ability to handle a wide range of items which could potentially be flushed. The vendor did note that "flushable" wipes are a potential problem in volume as they are not easily ground and can accumulate and clog the pumps. Public Works staff will work with Recreation, Parks, and Cultural Services staff to place appropriate signage in the restrooms.

The force main varies in diameter from 1.25" to 2" with the size increasing where flows from a possible future connection from the tennis court and maintenance building restrooms would occur. The force main will primarily follow existing walking trails, internal roadways, and sidewalks before ultimately connecting to an existing Fulton County sewer manhole in the southern right of way of Webb Bridge Road. To minimize impacts to the park, the majority of the system will be installed through horizontal directional drilling.

Procurement and Project Bid Process:
On January 4, 2024, ITB 24-013 for the construction of the Webb Bridge Park Sewer Connection was issued. On February 22, 2024, a total of two bids were received in response to this invitation to bid:

Submitted Bid	Company/Bidder
$423,732.00	Sol Construction LLC
$646,970.00	Site Engineering Inc.

The apparent low bidder, Sol Construction LLC, is an experienced contractor that has successfully completed projects of similar scopes and currently holds a contract with Fulton County to provide on-call wastewater system construction. Additionally, Sol Construction is currently under contract with the City of Alpharetta for construction of the Webb Bridge Road Intersection Improvements – Maid Marion Close to Webb Bridge Park. Staff from the Department of Public Works met with representatives of Sol Construction LLC on Thursday, February 29, 2024, to review the project scope, schedule, and City's expectations. The representatives of Sol Construction assured staff that they could complete the project within the established schedule, for the submitted bid price, and without negatively impacting their work on the Webb Bridge Road Intersection Improvements project.

Once a contract has been executed, work on the project can begin immediately. Project completion is anticipated within 60 calendar days from notice to proceed.

ALTERNATIVES:

Do not approve the contract award to Sol Construction, and the construction services for this project will not be procured.

ATTACHMENTS:

1. Site Plan
2. Sol Construction Contract ITB 24-013
3. Fulton County Permit Application

INSTALL PUMP STATION
LOW-PRESSURE FORCE MAIN
CONNECT TO FULTON
COUNTY SYSTEM
WEBB BRIDGE PARK
SEWER CONNECTION
ITB 24-013
THE CITY OF
ALPHARETTA
PUBLIC WORKS
NORTH
0
75'
150'

CONTRACT AGREEMENT
WEBB BRIDGE PARK SANITARY SEWER CONNECTION
(INVITATION TO BID NO. 24-013)

THIS CONTRACT AGREEMENT (the "Contract"), made by and between **CITY OF ALPHARETTA, GEORGIA**, a municipal corporation of the State of Georgia (hereinafter, the "CITY"), and **SOL CONSTRUCTION, LLC**., a Domestic Limited Liability Company with its principal office located at 4120 Presidential Parkway, Suite 115, Atlanta, GA 30340 (the "CONTRACTOR").

WITNESSETH: that for and in consideration of the payments to be made by the CITY, and for other good and valuable consideration, the receipt and legal sufficiency of which is hereby acknowledged, the CONTRACTOR hereby agrees to commence and complete the construction project described as follows:

> **WEBB BRIDGE PARK SANITARY SEWER CONNECTION** (the "Project") including but not limited to installation of a lift station, installation of force main by trenching and horizontal directional drilling, installation of sanitary sewer manholes, and related work. The location of the work is Webb Bridge Park, located at 4780 Webb Bridge Road --- within the City of Alpharetta, Georgia.

For CONTRACTOR'S performance and completion of the Project (as defined in Appendix A: General Conditions in ITB No. 24-013 (the "General Conditions")), CITY shall pay CONTRACTOR a fee in accordance with the unit costs on Exhibit A attached for a total sum not to exceed **Four Hundred Twenty-Three Thousand, Seven Hundred Thirty-Two and 00/100 DOLLARS ($423,732.00)**. At CONTRACTOR's own cost and expense, CONTRACTOR shall furnish all materials, supplies, machinery, equipment, tools, superintendence, labor, insurance, and other accessories and services necessary or convenient to the successful completion of the Project and the carrying out of all duties and obligations in accordance with the terms and conditions set forth in ITB No. 24-013 and the General Conditions contained therein, CONTRACTOR'S Bid, the GDOT 2021 Standard Specifications as modified by the GDOT 2024 Supplemental Specifications and the Special Provisions contained therein, including any technical specifications for the Project, the plans and specifications, including all explanatory matter thereof, and the other contract documents as enumerated in Section 101.16 of the General Conditions, all of which (the "Contract Documents") are made a part hereof and collectively constitute the agreements and obligations of the parties under this Contract (the "Work").

The CITY agrees to pay CONTRACTOR in current funds for the performance of the Work subject to additions and deductions as provided in the General Conditions and to make payments on account thereof as provided in Section 109 of the General Conditions.

In the event of any delay which is not the fault or responsibility of CONTRACTOR or any supplier to CONTRACTOR, CONTRACTOR is entitled to additional days for performance of this Contract (not to exceed fifteen (15) days from the date of completion set forth in this Contract). CONTRACTOR shall not be entitled to any additional money for any delay which it encounters. CONTRACTOR's sole remedy shall be to obtain an extension of time within which this Contract is to be performed. Under no circumstances shall CONTRACTOR be entitled to assert any claim of entitlement against the CITY for actual or consequential damages resulting from delays.

Upon CONTRACTOR's breach of any material provision of this Contract, which breach remains uncured after seven (7) days written notice of default, the CITY may terminate this Contract without liability for further payment of amounts due or to become due under this Contract. Termination shall be in addition to, and not in lieu of, any other remedies available to the CITY under this Contract or applicable law, including making of claims under CONTRACTOR's bonds. Upon the CITY's breach of any material provision of this Contract, which breach remains uncured after seven (7) days written notice of default, CONTRACTOR shall be entitled to terminate this Contract or pursue such other remedies not inconsistent with this Contract, as it may have in law or equity. This Contract may also be terminated or suspended by the CITY for CITY's convenience upon not less than seven (7) days written notice to CONTRACTOR. In the event of such termination, CONTRACTOR shall be compensated for services performed through the date of termination, together with any reimbursable expenses then due. Any termination of this Contract by the CITY for an alleged default which is ultimately held unjustified shall automatically be deemed to be a termination for convenience.

This Contract was awarded and is contingent upon CONTRACTOR's compliance with O.C.G.A. § 13-10-91, Chapter 300-10-1 of the Rules of the Georgia Department of Labor, and CONTRACTOR's certification to the CITY that it has registered and currently participates in the federal work authorization program to verify employment eligibility of all newly hired employees. Further, as part of any approved subcontracting agreement, CONTRACTOR has certified that any subcontractor entering into this Contract for the physical performance of services within this State is in compliance with O.C.G.A. § 13-10-91 and Chapter 300-10-1 of the Rules of the Georgia Department of Labor and has registered and currently participates in the federal work authorization program to verify employment eligibility of all newly hired employees. This Contract may be suspended or terminated if it is determined that CONTRACTOR has made a false certification or has violated such certification by failure to carry out this requirement.

CONTRACTOR shall maintain the types and amounts of insurance set forth in the ITB and the General Conditions, and as otherwise reasonably required by the CITY from time to time. CONTRACTOR shall provide proof of such insurance to the CITY contemporaneously with the execution of this Contract, and as and when requested by the CITY during the term hereof. Acceptance of a certificate or proof of insurance does not constitute approval or agreement by the CITY that the insurance requirements have been satisfied. CONTRACTOR shall indemnify and hold the CITY harmless from all claims, demands, losses, attorneys' fees and liabilities of any type or nature arising out of or related to CONTRACTOR's, or CONTRACTOR's agents', employees' or subcontractors', performance or non-performance of this Contract, including, but not limited to, claims for injury to person or property; provided, however, that this indemnification obligation shall not apply to claims arising from the sole negligence of the CITY or its employees. Nothing in this paragraph or this Contract shall be deemed to constitute a waiver of the CITY's sovereign immunity, create rights in any third party, or create any third-party beneficiaries.

The provisions of this Contract and the Contract Documents constitute the entire Contract between the parties, and all prior discussions and agreements are merged herein. This Contract is expressly intended to supersede all provisions of the Georgia Prompt Pay Act.

Any dispute arising in connection with the interpretation of this Contract, the performance of any party under this Contract or any claim or dispute under this Contract or otherwise related to this Contract shall, at the sole option of the CITY, be referred to binding arbitration in Atlanta, Georgia in accordance with the Construction Arbitration Rules of the American Arbitration Association. CONTRACTOR'S surety shall be obligated to be a party to

any such arbitration and be conclusively bound by the decision of the arbitrator.

The CONTRACTOR shall promptly commence the Work with adequate force and equipment **within ten (10) calendar days** from receipt of the Notice to Proceed, or as may be specified by the Special Provisions, continuously pursue the Work without interruption to achieve final completion of the Work **Sixty (60) calendar days from the Notice to Proceed.**

IN WITNESS WHEREOF, the Parties hereto have each caused this Contract to be executed and delivered by a duly authorized officer, agent, or official as of the date set forth below.

Executed _____

CITY OF ALPHARETTA, GEORGIA

By: _____
Jim Gilvin, Mayor

Date: _____

Approved as to Content:

_____
Chris Lagerbloom, City Administrator

Approved as to form:
JARRARD & DAVIS, LLP

_____
Ed Howden, City Attorney

SOL CONSTRUCTION LLC

By: _____
Juliana Gomez, President

Attest:

By: _____
Jose Villegas, VP/Secretary

Date: _____

Contract: **WEBB BRIDGE PARK SANITARY SEWER CONNECTION**
Contract No.: 24-013

EXHIBIT "A"

CITY OF ALPHARETTA - SCHEDULE OF ITEMS
ITB 24-013, Webb Bridge Park Sanitary Sewer Connection

Sol Construction LLC

Instructions for Bid Form Completion:

1. This form MUST be used to submit cost proposal
2. Do not include a copy of this Bid Form in your technical bid information.
3. Complete all the fields. Enter Bidder's Name at top of form. See end of form as well for bid authorization and contact info.
4. Verify all amounts entered. This form will be used for bid price award.
5. During bid opening, only bid grand total will be called.
6. Enter Unit Price. Form will calculate the Bid Price by multiplying Estimated Quantity by Unit Price entered.

Line Item #	Item Description	Unit Price	Unit	QTY	Total
	SITE ITEMS				
001	GRADING COMPLETE	$ 32,000.00	LS	1	$ 32,000.00
002	REMOVE & REPLACE EXISTING PARK GRAVEL PATH	$ 226.00	SY	80	$ 18,080.00
003	REMOVE & REPLACE EXISTING CONCRETE SIDEWALK	$ 250.00	SY	30	$ 7,500.00
	UTILITY ITEMS				
101	PUMP STATION, E/ONE DH 152, COMPLETE	$ 45,000.00	EA	1	$ 45,000.00
102	1.25" SDR 11 HDPE FORCE MAIN WITH TRACER WIRE (OPEN CUT INSTALLATION)	$ 505.00	LF	43	$ 21,715.00
103	1.25" SDR 11 HDPE FORCE MAIN WITH TRACER WIRE (HDD INSTALLATION)	$ 32.00	LF	786	$ 25,152.00
104	2" SDR 11 HDPE FORCE MAIN WITH TRACER WIRE (OPEN CUT INSTALLATION)	$ 127.00	LF	163	$ 20,701.00
105	2" SDR 11 HDPE FORCE MAIN WITH TRACER WIRE (HDD INSTALLATION)	$ 35.00	LF	809	$ 28,315.00
106	6" PVC GRAVITY SEWER	$ 326.00	LF	16	$ 5,216.00
107	8" DIP GRAVITY SEWER	$ 624.00	LF	22	$ 13,728.00
108	1.25" E/ONE LATERAL KIT	$ 2,000.00	EA	3	$ 6,000.00
109	2" E/ONE LATERAL KIT	$ 5,000.00	EA	1	$ 5,000.00
110	1" COMBINATION AIR RELEASE/VACUUM VALVES	$ 15,000.00	EA	2	$ 30,000.00
111	2" CLEAN OUT	$ 1,300.00	EA	1	$ 1,300.00
112	REMOVE & REPLACE EXISTING BATHROOM CLEANOUT	$ 1,300.00	EA	1	$ 1,300.00
113	PRECAST CONCRETE MANHOLE WITH EPOXY COATING, COMPLETE	$ 27,500.00	EA	1	$ 27,500.00
114	METER VAULT FOR FUTURE CONNECTION POINTS/LOCATING	$ 400.00	EA	3	$ 1,200.00
115	6" STEEL CASING, WEBB BRIDGE PARK LOOP ROAD (FREE BORE INSTALLATION)	$ 460.00	LF	40	$ 18,400.00
116	6" STEEL CASING, WEBB BRIDGE ROAD (JACK & BORE INSTALLATION)	$ 420.00	LF	80	$ 33,600.00
117	TIE-IN TO EXISTING FULTON COUNTY MANHOLE	$ 2,100.00	EA	1	$ 2,100.00
118	REPLACE EXISTING FULTON COUNTY MANHOLE COVER	$ 2,500.00	EA	1	$ 2,500.00
	EROSION CONTROL ITEMS				
201	TEMP. EROSION CONTROL (INCLUDING INSTALLATION, MAINTENANCE, AND REMOVAL)	$ 6,000.00	LS	1	$ 6,000.00
202	PERMANENT SEED (Ds3)	$ 9.00	SY	130	$ 1,170.00
203	SOD (Ds4)	$ 27.00	SY	65	$ 1,755.00
	MISCELLANEOUS ITEMS				
301	MISCELLANEOUS CONSTRUCTION	$ 50,000.00	LS	1	$ 50,000.00

CITY OF ALPHARETTA - SCHEDULE OF ITEMS
ITB 24-013, Webb Bridge Park Sanitary Sewer Connection

302	PROJECT RECORD DRAWINGS	$ 2,500.00	LS	1	$ 2,500.00
303	BONDS, MOBILIZATION, AND INSURANCE	$ 16,000.00	LS	1	$ 16,000.00
				GRAND TOTAL	**$423,732.00**

By completing and submitting this bid price form in response to the City of Alpharetta's ITB 24-013,Webb Bridge Park Sanitary Sewer Connection, Bidder certifies that:

A. Bidder has carefully read and understands Bidding Documents;
B. Bidder has visited site and become familiar with local conditions under which Work is to be performed, including verifying visible conditions, such as dimensions, materials, and attachments to remain, on existing facility;
C. Bidder has correlated Bidder's personal observations with requirements of Bidding Documents;
D. Bidder has reviewed ITB 24-013 Plans and Project Manual and Specifications; and
E. Bidder understands that Bid may not be withdrawn within Sixty (60) days after bid due date, and Bidder guarantees that the City has the right to waive informalities and irregularities in Bid received and to accept Bid which, in City's judgment, is in City's own best interests.
F. Award of this project will be by grand total base bid plus any selected alternates.

Sol Construction LLC	Company Name:
4120 Presidential Pkwy #115, Atlanta, GA 30340	Address:
Juliana Gomez, President	Name(s) and Title(s) Authorized Signer(s):
770-455-1822	Contact Info - Phone Number:
jgomez@solconstructionllc.com	Contact Info - Email Address:

From:	Rutledge, Damascus
To:	Nick Wilson; Sarra, Geoffrey
Cc:	Scott, Brandon; Bustillos, Adriana; Merkerson, Brian
Subject:	Permit Approval Letter WRN23-104 Webb Bridge Park Sewer Improvements
Date:	Tuesday, December 12, 2023 3:41:32 PM
Attachments:	image001.png WRN23-104_Approval Letter.pdf Permit Application For Water Resources Construction Activity 9-19-22 - Copy.pdf

---

Attached please find the following item. You will need to provide this item via email to receive your permit.

1. Permit Application (attached-signed by owner and notarized ink stamped, if the permit application is embossed, please add texture for scanning and copying)

All of your permit meeting documents must be submitted to us electronically Development.Permits@fultoncountyga.gov. We will provide the stamped and approved project plans to you electronically along with the permit.

Please contact the team at 404-612-4244, 404-612- 9432 or email at SWpermits@fultoncountyga.com to pay the system connection fees.

Damascus Rutledge
Engineering Technician Senior
Department of Public Works, Water Services
11575 Maxwell Road
Alpharetta, Georgia 30009
Office: 404-612-2903
Room: 265
Connect with Fulton County:
Website | Facebook | Twitter | Instagram | FGTV | #OneFulton E-News

DEPARTMENT OF PUBLIC WORKS
11575 Maxwell Road
Alpharetta, Georgia 30009
Telephone: 404-612-3421
Fax: 404-893-6876

David E. Clark, P.E.
Director

FC PROJECT # WRN23-104

ADDRESS: 4772 WEBB BRIDGE RD

PROJECT NAME: City of Alpharetta Webb Bridge Pa

PARCEL ID(S): 11 044001620132, 11 044001620108

ISSUED: 12/12/2023

EXPIRES: 06/12/2024

Congratulations! As of the "Issued" date above, your team has been approved to move forward with a permit issuance. This permit authorization letter is valid for only six (6) months. If the permit meeting is not scheduled and held within 6 months, this plan approval is void. Once issued, the Fulton County Utility Permit is valid for only twelve (12) months. The permit shall be null and void if physical construction of the sewer and/or water portions of the project has not commenced within 12 months of the date of issue or if work is suspended/abandoned for 6 months or more after water/sewer work has started. After the permit authorization letter has expired or the approved permit has expired, a second review and a new review fee will be required.

Attached please find the following items. You will need to provide these items via email to receive your permit.

1. Permit Fee Sheet (attached)
2. Permit Fee Payment via over the phone (for the amount of fees, No American Express), or you can complete the Credit Card Authorization Form.
3. Permit Application (attached-signed by owner and notarized ink stamped, if the permit application is embossed please add texture for scanning and copying)
4. Final Review Approved Plans (SEND ONLY: cover sheet, water & sewer sheets, and profiles sheets emailed)

All of your permit meeting documents must be submitted to us electronically. We will provide the stamped and approved project plans to you electronically along with the permit.

If your project is encroaching on a State Route, you will need a GDOT Exhibit Review and GDOTUtility permit before construction is allowed onthis project.

The fee sheet for the Water Resources Utility Construction Permit for this development is attached. A credit card payment to Fulton County in the amount of $0.00 will be required for the permit and inspection fees for this development prior to the issuance of the permit.

You will need to provide the following items via email to receive your permit:

- Permit Application (attached - signed by owner and notarized ink stamped, if the permit application is embossed please add texture for scanning and copying).
- Final Review Approved Plans (EMAIL ONLY: coversheet, water & sewer sheets, and profiles sheets).

If you have any questions or need additional information, contact our office at 404-612-2903.

Sincerely,

Brandon Scott

Brandon Scott
Fulton County Dept. of Public Works
Water Resources Division Developent Permitting Staff

PERMIT APPLICATION FOR WATER RESOURCES CONSTRUCTION ACTIVITY

Department of Public Works
11575 Maxwell Road
Alpharetta, Georgia 30009
Telephone: 404-612-3421

PERMIT APPLICATION FOR WATER RESOURCES CONSTRUCTION ACTIVITY

Date: _____ Inspector: _____

Project No.: WRN23-104 Zoning: Su

City: Alpharetta Zoning Case Number: N/A

Application is made according to the laws and ordinances of Fulton County and the State of Georgia for a Water Resources Construction Permit as described herein and/or shown on the accompanying plan(s) and specifications, to be located as shown on accompanying plan and if same is granted, applicant agrees to conform to all laws and ordinances regulating the same.

PROJECT NAME: City of Alpharetta Webb Bridge Park

Land Lot(s): 162, 163, 194 District: 1 Section: 1

Proposed Use of Property: Ex. Public Park

Total Project Acreage: Total Site: 92 Acres, Disturbed Area Associated with Construction: 0.04 Acres

DESCRIPTION OF CONSTRUCTION ACTIVITY: Replacement of an existing septic system servicing a park restroom with a low-pressure force main system connecting to the County's existing wastewater system.

OWNER: City of Alpharetta

Address: 2 Park Plaza, Alpharetta, GA 30009

Telephone/Email: 678-297-6000 / jgilvin@alpharetta.ga.us

CONTRACTOR: Sol Construction LLC

Address: 4120 Presidential Parkway, Suite 115, Atlanta, GA 30340

Telephone/Email: 770-455-1822 / jvillegas@solconstructionllc.com

The undersigned applicant agrees and understands that this permit is void unless all aspects of the operation pertaining to water and sewer construction have been approved by the Fulton County Department of Public Works, the Georgia Department of Transportation (if applicable), and any public utility having interest in the subject property. In addition, the owner/developer must notify the assigned inspector prior to the commencement of any land disturbance activities. Furthermore, erosion control devices must be completed prior to installation of utilities, as approved by this permit. The permit card must be posted on the project site in plain view from the road frontage and remain throughout the operations for which this permit is issued. Subsequent removal shall result in an immediate "Stop Work" Notice and a new permit must be applied for to resume work. Site plans, calculations, and any other supporting documentation associated with this application is hereby incorporated by reference.

Personally appeared before me the above named applicant, who on oath states that he/she is the applicant for the forgoing and that the above statements are true to the best of his/her knowledge.

NOTARY PUBLIC: _____
Printed Name / Signature

I understand that for residential subdivisions all onsite Fulton County water and / or sewer easements documentation, and, as applicable, any Water and / or Sewer Ownership, Operation Maintenance and Repair Agreements (Private Street) and / or Indemnification, Maintenance, and Land Use Agreements (Encroachment) must be submitted, reviewed and confirmed to meet Fulton County requirements before approval of the final plat.

OWNER: _____ / 2 Park Plaza, Alpharetta, GA, 30009 / 678-297-6000
Applicant's Signature / Address / Phone Number

Sworn and subscribed to before me on this _____ day of _____, _____

COUNTY: _____ STATE: _____

Public Works Department Approval: _____ _____
Signature Date

NOTE: Activities approved by this permit must commence within one (1) year from the date of approval hereon; otherwise, this permit is void.

STAFF REPORT

Department: Public Safety
Submitted By: Stephanie Cochran
Meeting Date: April 15, 2024

AGENDA ITEM:

Purchase Approval: Public Safety Vehicles
Consideration of approval of the purchase of fifteen (15) 2024 Chevrolet Tahoes in the amount of $821,490.40 and the upfitting of these vehicles from Dana Safety Supply Inc. in the amount of $364,570.81 (utilizing the City's competitively procured On-Call Public Safety Vehicle Upfitting contract), and with authorization for the Mayor to execute all necessary documents.

STAFF RECOMMENDATION:

Approve the purchase of fifteen (15) 2024 Chevrolet Tahoes, totaling $821,490.40, and the upfitting of these vehicles from Dana Safety Supply Inc. (utilizing the City's competitively procured On-Call Public Safety Vehicle Upfitting contract), with an additional amount of $364,570.81 and authorize the Mayor to execute all necessary documents.

BUDGET & PROCUREMENT:

BUDGETED ITEM: YES

FISCAL IMPACT: YES

INCLUDED IN CURRENT FY CPTL BUDGET: NO

INCLUDED IN CURRENT FY OPRT. BUDGET: NO

TOTAL PROJECT COST: THE PROJECT'S TOTAL COST IS $1,186,061.21, WHICH IS THE COST FOR FIFTEEN (15) VEHICLES AND THE UPFIT COST.

APPROPRIATIONS:

ACCOUNT TITLE/NUMBER	DOLLAR AMOUNT
Fleet Replacement 30131150 - 542200 - C1202	$1,186,061.21

EXTERNAL FUNDING SOURCES:

ACCOUNT TITLE/NUMBER	DOLLAR AMOUNT
.	$0.00

ITEM DESCRIPTION:

The Department of Public Safety seeks approval to purchase fifteen (15) 2024 Chevrolet Tahoes, as Police Pursuit Vehicles (PPV) from Hendrick Chevrolet. Additionally, approval is sought for the upfitting of the fifteen (15) vehicles to be completed by Dana Safety Supply Inc. through the City's On-Call Public Safety Vehicle Upfitting contract.

Details:

1. **Vehicle Allocation:**
    - The fifteen (15) Chevrolet Tahoes are intended to replace older fleet vehicles, including:
        - Eleven (11) patrol vehicles
        - Two (2) K9 vehicles
        - Two (2) administration vehicles
2. **Cost Breakdown:**
    - The total cost for the fifteen Tahoes is $821,490.40.
    - Upfitting cost for the fifteen Tahoes is $364,570.81.

3. **Background:**
    - In February 2023, patrol Ford Explorers were ordered but were delayed in production and carried over to 2024 models.
    - Ford Motor Company's production delays, attributed to supply chain constraints, over-selling, and Auto Worker Union Strikes, have led to extended delivery times.
    - Previous attempts to order through Hardy Chevrolet were unsuccessful due to insufficient allotment.
    - Rick Hendrick Chevrolet in Buford, Georgia, has confirmed the availability of Tahoe Police Pursuit Vehicles (PPV) for the Alpharetta Department of Public Safety.
4. **Cost Comparison:**
    - Wade Ford provided pricing for the 2025 Ford Explorer Police Interceptor at $48,311.
    - The state contract pricing for a patrol-optioned 2024 Chevrolet Tahoe PPV is $54,690, with the Hendrick Chevrolet invoice at $54,761.90, a difference of $70.91.
    - Despite a higher upfront cost, research indicates that the total cost of ownership of the Tahoe is lower, considering factors such as repair costs, fuel consumption, and resale value.

Funding: Funding for purchasing these vehicles (including upfitting) is being provided through the PS Fleet Replacement account.

ALTERNATIVES:

Deny the purchase of these fifteen (15) Chevrolet Tahoes and risk the opportunity of being unable to find vehicles immediately available for purchase.

ATTACHMENTS:

1. PS Patrol Tahoe Quote
2. PS Admin Tahoe Quote
3. SO# 526284 - Alpharetta (Admin Tahoe)
4. SO# 526143 - Alpharetta (Patrol Tahoe)
5. SO# 526253 - Alpharetta (K9 Tahoe)

BUYER	CO-BUYER	
CITY OF ALPHARETTA GA **Work #:** **Email:**	**Salesperson:**	**Deal #:** **Deal Type:** Retail **Deal Date:** 03/13/2024 **Print Time:** 03:32pm

VEHICLE

	Stock #:	Description:	VIN:	Mileage:
New ☑ **Used** ☐ **Demo** ☐	FR82717	2024 CHEVROLET TRUCK TAHOE	1GNSKLED9RR182717	10

TRADE

AFTERMARKETS

Total Aftermarkets: $ **0.00**

Rate:
Amount Financed: $ 54,761.90

Sale Price:	**$**	**54,761.90**
Total Financed Aftermarkets:	$	0.00
Total Trade Allowance:	$	0.00
Trade Difference:	**$**	**54,761.90**
Dealer Administrative Charge	$	0.00
State & Local Taxes:	$	0.00
Total License and Fees:	$	0.00
Total Cash Price:	**$**	**54,761.90**
Total Trade Payoff:	$	0.00
Delivered Price:	**$**	**54,761.90**
Cash Down Payment + Deposit:	$	0.00
Sub Total:	**$**	**54,761.90**
Amount Financed:	**$**	**54,761.90**

X _____ Buyer

X _____ Dealer

Vehicle Locator

Dealer Information

RICK HENDRICK CHEVROLET OF BUFORD
4490 S LEE ST
BUFORD, GA 30518
Phone: 678-745-2500
Fax: 678-745-2501

1GNSKLED9RR182717

Model Year: 2024
Make: Chevrolet
Model: Tahoe
CK10706-4WD
PEG: 1FL-Commercial / Fleet Preferred Equipment Group
Primary Color: GBA-Black
Trim: H1T-1WT/1FL-Cloth, Jet Black, Interior Trim
Engine: L84-Engine: 5.3L, EcoTec3 V-8, DI, Dynamic Fuel Mgt, V V T
Transmission: MHU-Transmission, 10sp, 10L80 Gen 2

Event Code: 5000-Delivered to Dealer
Order #: DGGZS1
Order Type: FBC-Fleet Political Subdivision
Stock #: N/A
Inventory Status: N/A

Additional Vehicle Information	
GM Marketing Information	

Vehicle Options

Chargeable Options	MSRP
6C7-(SEO) Lighting, Red/White front, aux dome	**$170.00**
7X3-(SEO) Spotlamp, Left-hand LED	**$800.00**
AMF-Remote Keyless Entry Package	**$75.00**
DRZ-Rear Camera Mirror, Inside Rear View, Auto Dimming	**$475.00**

No Cost Options

5J0-Calibration, Front Park Assist Disable
FE9-Federal Emissions
L84-Engine: 5.3L, EcoTec3 V-8, DI, Dynamic Fuel Mgt, V V T
MHU-Transmission, 10sp, 10L80 Gen 2
R6D-FLT-BID ASSISTANCE/CE
VQ1-Holdback, Fleet Dealer Assistance

Other Options

1FL-Commercial / Fleet Preferred Equipment Group	5J3-Calibration, Surveillance Mode Int. Lighting (SEO)
5J9-Calibration, Taillamp Flasher, Red/White (SEO)	5LO-(SEO) Calibration, taillamp flasher, Red/Red
5Y1-Seats, Driver/Pass Front Individual, No Console (SEO)	6J7-(SEO) Flasher System, Headlamp and tailamp
9C1-Police Package	A2X-Power Seat Adjuster (Driver's Side)
AT6-Seat, 2nd row 60/40 Bench, manual	ATD-Seat Delete: Third Row
ATH-Keyless Open & Keyless Start	AY0-Airbags-frontal,front seat side-impact and roof-rail
AZ3-Seats: Front 40/20/40 Split-Bench, Full Feature	BCV-(SEO) Calibration, Rear Door Auto Lock Disable
BG9-Floor Covering: Rubberized Vinyl, Black	BVE-Assist Steps, Black
C6G-GVW Rating 7600 Lbs	CJ2-Climate Control, Electronic - Multi-zone
CWA-Rear Camera, Mirror Washer	DLF-Mirrors, O/S: Power, Heated
GBA-Black	GU5-Rear Axle: 3.23 Ratio
H1T-1WT/1FL-Cloth, Jet Black, Interior Trim	IOR-Chevrolet Infotainment, 7" Color Screen
K34-Cruise Control	KC4-Cooler, Engine Oil
KI4-120 Volt Electrical Receptacle, In Cab	KNP-Transmission Cooling System
KX4-Alternator, 250 AMP	N37-Steering Column, Manual Tilt & Telescoping
PRF-3 Years of Onstar Remote Access	PXT-Wheels: 20" Steel
R6J-Ship Thru Code Acknowledgement	RC1-Skid Plate
RNQ-Wheel, 20" Full size spare, steel	T8Z-Buckle-To-Drive
TB4-Liftgate, Rear, manual	U2J-SiriusXM Satellite Radio, Delete
UD5-Parking Assist, Front & Rear Sensors	UE1-OnStar Communication System
UK3-Radio Controls -Steering Wheel	UT7-(SEO) Ground studs, aux, cargo area inside liftgate
UTJ-Theft Protection System, Unauthorized Entry	UVB-Rear Vision Camera, HD
V03-Cooling system, extra capacity	V53-Luggage rack side rails - none
VPV-Ship thru charge: Kerr Industr., Arlington, TX	WUA-Fascia, Front, custom
XCS-TIRE ALL 275/55R20 SL 113V BW AL3 VAR1	YK6-SEO Processing Option
Z56-CHASSIS PACKAGE POLICE CONVERSION	Z82-Trailering Package

"~" indicates vehicle belongs to Trading Partner's inventory

Disclaimer:

GM has tried to make the pricing information provided in this summary accurate. Please refer to actual vehicle invoice, however, for complete pricing information. GM will not make any sales or policy adjustments in the case of inaccurate pricing information in this summary.

BUYER	CO-BUYER		
CITY OF ALPHARETTA		**Deal #:**	157544
		Deal Type:	Retail
GA		**Deal Date:**	03/15/2024
Work #:		**Print Time:**	08:47am
Email:	**Salesperson:**		

VEHICLE

New ☑				
Used ☐	**Stock #:**	**Description:**	**VIN:**	**Mileage:**
Demo ☐	FR82626	2024 CHEVROLET TRUCK TAHOE	1GNSKLED6RR182626	10

TRADE

AFTERMARKETS

Total Aftermarkets: $ **0.00**

Rate:
Amount Financed: $ 54,792.85

Sale Price:	**$**	**54,792.85**
Total Financed Aftermarkets:	$	0.00
Total Trade Allowance:	$	0.00
Trade Difference:	**$**	**54,792.85**
Dealer Administrative Charge	$	0.00
State & Local Taxes:	$	0.00
Total License and Fees:	$	0.00
Total Cash Price:	**$**	**54,792.85**
Total Trade Payoff:	$	0.00
Delivered Price:	**$**	**54,792.85**
Cash Down Payment + Deposit:	$	0.00
Sub Total:	**$**	**54,792.85**
Amount Financed:	**$**	**54,792.85**

X _____
Buyer

X _____
Dealer

Vehicle Locator

Dealer Information

RICK HENDRICK CHEVROLET OF BUFORD
4490 S LEE ST
BUFORD, GA 30518
Phone: 678-745-2500
Fax: 678-745-2501

1GNSKLED7RR182621

Model Year: 2024
Make: Chevrolet
Model: Tahoe
CK10706-4WD
PEG: 1FL-Commercial / Fleet Preferred Equipment Group
Primary Color: GBA-Black
Trim: H1T-1WT/1FL-Cloth, Jet Black, Interior Trim
Engine: L84-Engine: 5.3L, EcoTec3 V-8, DI, Dynamic Fuel Mgt, V V T
Transmission: MHU-Transmission, 10sp, 10L80 Gen 2

Event Code: 4800-Rail Ramp Unload
Order #: DGGZRR
Order Type: FBC-Fleet Political Subdivision
Stock #: N/A
Inventory Status: N/A

Additional Vehicle Information	
GM Marketing Information	

Vehicle Options

Chargeable Options	MSRP
6C7-(SEO) Lighting, Red/White front, aux dome	**$170.00**
A50-Seats: Front, Bucket, Full Feature	**$350.00**
AMF-Remote Keyless Entry Package	**$75.00**
B30-Floor Covering: Carpet, Color Keyed	**$195.00**
B58-Floor Mats, color-keyed, carpeted 1st and 2nd row	**$80.00**
BTV-Remote Engine Starting Pkg	**$300.00**
PQA-1WT/1FL Safety Package	**$395.00**

No Cost Options

FE9-Federal Emissions
L84-Engine: 5.3L, EcoTec3 V-8, DI, Dynamic Fuel Mgt, V V T
MHU-Transmission, 10sp, 10L80 Gen 2
R6D-FLT-BID ASSISTANCE/CE
VQ1-Holdback, Fleet Dealer Assistance

Other Options

1FL-Commercial / Fleet Preferred Equipment Group	5J3-Calibration, Surveillance Mode Int. Lighting (SEO)
5J9-Calibration, Taillamp Flasher, Red/White (SEO)	5LO-(SEO) Calibration, taillamp flasher, Red/Red
6J7-(SEO) Flasher System, Headlamp and tailamp	9C1-Police Package
A2X-Power Seat Adjuster (Driver's Side)	AT6-Seat, 2nd row 60/40 Bench, manual
ATD-Seat Delete: Third Row	ATH-Keyless Open & Keyless Start
AY0-Airbags-frontal,front seat side-impact and roof-rail	BCV-(SEO) Calibration, Rear Door Auto Lock Disable
BVE-Assist Steps, Black	C6G-GVW Rating 7600 Lbs
CJ2-Climate Control, Electronic - Multi-zone	D07-Center Floor Console, fixed
DLF-Mirrors, O/S: Power, Heated	GBA-Black
GU5-Rear Axle: 3.23 Ratio	H1T-1WT/1FL-Cloth, Jet Black, Interior Trim
IOR-Chevrolet Infotainment, 7" Color Screen	K34-Cruise Control
KC4-Cooler, Engine Oil	KI4-120 Volt Electrical Receptacle, In Cab
KNP-Transmission Cooling System	KX4-Alternator, 250 AMP
N37-Steering Column, Manual Tilt & Telescoping	PRF-3 Years of Onstar Remote Access
PXT-Wheels: 20" Steel	R6J-Ship Thru Code Acknowledgement
RC1-Skid Plate	RNQ-Wheel, 20" Full size spare, steel
T8Z-Buckle-To-Drive	TB4-Liftgate, Rear, manual
U2J-SiriusXM Satellite Radio, Delete	UD5-Parking Assist, Front & Rear Sensors
UE1-OnStar Communication System	UE4-Following Distance Indicator
UEU-Sensor, Forward Collision Alert	UHX-Lane Keep Assist/Departure Warning
UHY-Automatic Emergency Braking	UK3-Radio Controls -Steering Wheel
UKJ-Sensor, Front Pedestrian Braking	UT7-(SEO) Ground studs, aux, cargo area inside liftgate
UTJ-Theft Protection System, Unauthorized Entry	UVB-Rear Vision Camera, HD
V03-Cooling system, extra capacity	V53-Luggage rack side rails - none
VPV-Ship thru charge: Kerr Industr., Arlington, TX	WUA-Fascia, Front, custom
XCS-TIRE ALL 275/55R20 SL 113V BW AL3 VAR1	YK6-SEO Processing Option
Z56-CHASSIS PACKAGE POLICE CONVERSION	Z82-Trailering Package

"~" indicates vehicle belongs to Trading Partner's inventory

Disclaimer:

GM has tried to make the pricing information provided in this summary accurate. Please refer to actual vehicle invoice, however, for complete pricing information. GM will not make any sales or policy adjustments in the case of inaccurate pricing information in this summary.

Sales Quote

DANA SAFETY SUPPLY, INC
4809 KOGER BLVD
GREENSBORO, NC 27407

Telephone: 800-845-0405

Sales Quote No.	526284-A
Customer No.	ALPHA

Bill To	Ship To
ALPHARETTA, CITY OF EMAIL ALL INVOICES cmiller@alpharetta.ga.us ALPHARETTA, GA 30009	(For Pickup - ATLA) ATLANTA WAREHOUSE 4729 NELSON BROGDON BLVD SUITE C SUGAR HILL, GA 30518
Contact:	**Contact:**
Telephone: 678-297-6317	**Telephone:**
E-mail: psfleet@alpharetta.ga.u	**E-mail:**

Quote Date	Ship Via	F.O.B.	Customer PO Number	Payment Method
03/26/24	GROUND SHIPMENT	PPAY & ADD TO INVOICE	ADMIN TAHOE	NET30

Entered By	Salesperson	Ordered By	Resale Number
Jake Porter	JAKE PORTER-Atlanta	JONATHAN HICKEL	

Order Quantity	Approve Quantity	Tax	Item Number / Description	Unit Price	Extended Price
1	1	N	ENFWB00EM8 SOI, NFILB, FRNT, 8MOD, 2021-23 TAHOE, RBW Warehouse: ATLA Chevrolet Tahoe (2021-23) Split Front (DRV) |T18||T18||T18||T18||T18||T18||T18||T18| (PAS) |RBW||RBW||RBW||RBW||RBW||RBW||RBW||RBW| Accessories: PNFLBSPLT1 DSC w/ Breakout Box (Included)	964.1800	964.18
1	1	N	MISC SOI Rear Interior Bar, 8Mod, 2023 Tahoe RBA, RBW tips Warehouse: ATLA ENFWB00K57	964.1800	964.18
2	2	N	EMPS4STS5RBW SOI, MPWR HD, 4", STM, CLR HSG, RED/BLU/WHT Warehouse: ATLA HD 4" Light, 18" hard wire w/ sync option, SAE Class 1 & CA Title 13, 9-32 Vdc, Clear Lens, 18 LED, Tricolor - Red/Blue/White	122.4000	244.80
2	2	N	PMP4BZL01B SOI 4" MPOWER HD BLACK BEZEL Warehouse: ATLA	10.8000	21.60
1	1	N	PMP2BKUMB5-D SOI 21+ TAHOE Under Mirror Bracket Driver Side Warehouse: ATLA	19.5000	19.50

Print Date	03/26/24
Print Time	06:45:16 PM
Page No.	1

Printed By: Jake Porter

Continued on Next Page

Sales Quote

DANA SAFETY SUPPLY, INC
4809 KOGER BLVD
GREENSBORO, NC 27407

Telephone: 800-845-0405

Sales Quote No.	526284-A
Customer No.	ALPHA

Bill To	Ship To
ALPHARETTA, CITY OF EMAIL ALL INVOICES cmiller@alpharetta.ga.us ALPHARETTA, GA 30009	(For Pickup - ATLA) ATLANTA WAREHOUSE 4729 NELSON BROGDON BLVD SUITE C SUGAR HILL, GA 30518
Contact:	**Contact:**
Telephone: 678-297-6317	**Telephone:**
E-mail: psfleet@alpharetta.ga.u	**E-mail:**

Quote Date	Ship Via	F.O.B.	Customer PO Number	Payment Method
03/26/24	GROUND SHIPMENT	PPAY & ADD TO INVOICE	ADMIN TAHOE	NET30

Entered By	Salesperson	Ordered By	Resale Number
Jake Porter	JAKE PORTER-Atlanta	JONATHAN HICKEL	

Order Quantity	Approve Quantity	Tax	Item Number / Description	Unit Price	Extended Price
1	1	N	PMP2BKUMB5-P SOI 21+ TAHOE Under Mirror Bracket Passenger Warehouse: ATLA	19.5000	19.50
2	2	N	EMPS4STS5RBW SOI, MPWR HD, 4", STM, CLR HSG, RED/BLU/WHT Warehouse: ATLA HD 4" Light, 18" hard wire w/ sync option, SAE Class 1 & CA Title 13, 9-32 Vdc, Clear Lens, 18 LED, Tricolor - Red/Blue/White **Mounted in side rear doors**	122.8000	245.60
2	2	N	PMP2BKDGAJ SOI 4" mPOWER 90 DEGREE MOUNTING BRACKET, BLACK Warehouse: ATLA	8.9500	17.90
4	4	N	EMPS4STS5RBW SOI, MPWR HD, 4", STM, CLR HSG, RED/BLU/WHT Warehouse: ATLA HD 4" Light, 18" hard wire w/ sync option, SAE Class 1 & CA Title 13, 9-32 Vdc, Clear Lens, 18 LED, Tricolor - Red/Blue/White **Mounted in Side Rear Cargo Window**	122.8000	491.20
2	2	N	PMP2WSDDB SOI 4" MPOWER DUAL WINDOW SHROUD-BLACK Warehouse: ATLA	35.0000	70.00

Print Date	03/26/24
Print Time	06:45:16 PM
Page No.	2

Printed By: Jake Porter

Continued on Next Page

Sales Quote

DANA SAFETY SUPPLY, INC
4809 KOGER BLVD
GREENSBORO, NC 27407

Telephone: 800-845-0405

Sales Quote No.	526284-A
Customer No.	ALPHA

Bill To	Ship To
ALPHARETTA, CITY OF EMAIL ALL INVOICES cmiller@alpharetta.ga.us ALPHARETTA, GA 30009	(For Pickup - ATLA) ATLANTA WAREHOUSE 4729 NELSON BROGDON BLVD SUITE C SUGAR HILL, GA 30518
Contact:	**Contact:**
Telephone: 678-297-6317	**Telephone:**
E-mail: psfleet@alpharetta.ga.u	**E-mail:**

Quote Date	Ship Via	F.O.B.	Customer PO Number	Payment Method
03/26/24	GROUND SHIPMENT	PPAY & ADD TO INVOICE	ADMIN TAHOE	NET30

Entered By	Salesperson	Ordered By	Resale Number
Jake Porter	JAKE PORTER-Atlanta	JONATHAN HICKEL	

Order Quantity	Approve Quantity	Tax	Item Number / Description	Unit Price	Extended Price
1	1	N	CC-21TH-OH-7 TROY 2021 TAHOE OVERHEAD CONSOLE Warehouse: ATLA	329.0000	329.00
1	1	N	ENGSA5200RSR SOI, 500 SERIES KNOB/PB 200W CNTRL, +VOICE PLBK Warehouse: ATLA	746.2800	746.28
1	1	N	PSRN4MCEXT SOS MIC EXTENSION CABLE Warehouse: ATLA	58.0000	58.00
1	1	N	PSRNMC1 SOI Replacement Microphone & Strain Relief for #ETSA48 Warehouse: ATLA Replacement Microphone & Strain Relief for #ETSA481RSP, #ETSA482RSP	65.0000	65.00
1	1	N	ENGLMK001 SOI BLUPRINT LINK FOR 2021 TAHOE Warehouse: ATLA	296.0000	296.00
2	2	N	ENGND04102 SOI 10 OUTPUT REMOTE NODE W/ MAGNETIC I.D. Warehouse: ATLA	204.3000	408.60
2	2	N	ENGHNK06 SOI 10FT REMOTE NODE HARNESS Warehouse: ATLA	77.4000	154.80

Print Date	03/26/24
Print Time	06:45:16 PM
Page No.	3

Printed By: Jake Porter

Continued on Next Page

Sales Quote

DANA SAFETY SUPPLY, INC
4809 KOGER BLVD
GREENSBORO, NC 27407

Telephone: 800-845-0405

Sales Quote No.	526284-A
Customer No.	ALPHA

Bill To	Ship To
ALPHARETTA, CITY OF EMAIL ALL INVOICES cmiller@alpharetta.ga.us ALPHARETTA, GA 30009	(For Pickup - ATLA) ATLANTA WAREHOUSE 4729 NELSON BROGDON BLVD SUITE C SUGAR HILL, GA 30518
Contact:	**Contact:**
Telephone: 678-297-6317	**Telephone:**
E-mail: psfleet@alpharetta.ga.u	**E-mail:**

Quote Date	Ship Via	F.O.B.	Customer PO Number	Payment Method
03/26/24	GROUND SHIPMENT	PPAY & ADD TO INVOICE	ADMIN TAHOE	NET30

Entered By	Salesperson	Ordered By	Resale Number
Jake Porter	JAKE PORTER-Atlanta	JONATHAN HICKEL	

Order Quantity	Approve Quantity	Tax	Item Number / Description	Unit Price	Extended Price
1	1	N	ETSS100J SOI 100J SERIES COMPOSITE SPEAKER Warehouse: ATLA 100J series composite speaker w/ universal bail brkt-100 watt	179.0000	179.00
1	1	N	PMP2BK003 SOI 6 MODULE GRILLE BRACKET Warehouse: ATLA	69.7500	69.75
6	6	N	EMPSCG2STS5RBW SOI, MPWR FASCIA C-N-G, 4", STM, BLK HSG, RED/BLU/WH Warehouse: ATLA 4" 3-Wire Light w/ Stud Mount, for use with mpower Arrow Kit and Connect-n-Go, SAE Class 1 & CA Title 13, 9-32 Vdc, Black Housing, 18 LED, Tricolor - Red/Blue/White **mounted in Grille**	122.4000	734.40

Print Date	03/26/24
Print Time	06:45:16 PM
Page No.	4

Printed By: Jake Porter

Continued on Next Page

Sales Quote

DANA SAFETY SUPPLY, INC
4809 KOGER BLVD
GREENSBORO, NC 27407

Telephone: 800-845-0405

Sales Quote No.	526284-A
Customer No.	ALPHA

Bill To	Ship To
ALPHARETTA, CITY OF EMAIL ALL INVOICES cmiller@alpharetta.ga.us ALPHARETTA, GA 30009	(For Pickup - ATLA) ATLANTA WAREHOUSE 4729 NELSON BROGDON BLVD SUITE C SUGAR HILL, GA 30518
Contact:	**Contact:**
Telephone: 678-297-6317	**Telephone:**
E-mail: psfleet@alpharetta.ga.u	**E-mail:**

Quote Date	Ship Via	F.O.B.	Customer PO Number	Payment Method
03/26/24	GROUND SHIPMENT	PPAY & ADD TO INVOICE	ADMIN TAHOE	NET30

Entered By	Salesperson	Ordered By	Resale Number
Jake Porter	JAKE PORTER-Atlanta	JONATHAN HICKEL	

Order Quantity	Approve Quantity	Tax	Item Number / Description	Unit Price	Extended Price
1	1	N	C14855-COVIN Truck Vault Custom TruckVault Tahoe 2024 Warehouse: ATLA Custom TruckVault Covington PD Battery Access / Magnum Vault Cargo Tie-Down Trim Vehicle Model/Year:2021+ Tahoe Prisoner Cage will accommodate Drawer Fronts: Black Composite Exterior Carpet Color: Black Drawer Interior Carpet: Grey Drawer Lock(s): Push Button with key override	2,995.0000	2,995.00
1	1	N	T62213BLK TIGERT 21-22 SPECIAL SERVICE TAHOE Q/IRONBAND BLK Warehouse: ATLA	196.0000	196.00
1	1	N	LOFT-21TAH-EC LUND 21+ Tahoe Loft Electronic Equipment Tray Warehouse: ATLA LOFT-21TAH-EC 21+ Tahoe Loft Electronic Equipment Tray - Interior Dimension 16.5" x 40" LOFT-21TAH-EC Includes removable stand-off electronics installation platform, allowing "bench" prep prior to installation. (Optional Accessories Available)	801.0000	801.00
1	1	N	425-0019 JD TAHOE 2021+ NO HOLES GM/CHEVY Warehouse: ATLA	164.5800	164.58

Print Date	03/26/24
Print Time	06:45:16 PM
Page No.	5

Printed By: Jake Porter

Continued on Next Page

Sales Quote

DANA SAFETY SUPPLY, INC
4809 KOGER BLVD
GREENSBORO, NC 27407

Telephone: 800-845-0405

Sales Quote No.	526284-A
Customer No.	ALPHA

Bill To	Ship To
ALPHARETTA, CITY OF EMAIL ALL INVOICES cmiller@alpharetta.ga.us ALPHARETTA, GA 30009	(For Pickup - ATLA) ATLANTA WAREHOUSE 4729 NELSON BROGDON BLVD SUITE C SUGAR HILL, GA 30518
Contact:	**Contact:**
Telephone: 678-297-6317	**Telephone:**
E-mail: psfleet@alpharetta.ga.u	**E-mail:**

Quote Date	Ship Via	F.O.B.	Customer PO Number	Payment Method
03/26/24	GROUND SHIPMENT	PPAY & ADD TO INVOICE	ADMIN TAHOE	NET30

Entered By	Salesperson	Ordered By	Resale Number
Jake Porter	JAKE PORTER-Atlanta	JONATHAN HICKEL	

Order Quantity	Approve Quantity	Tax	Item Number / Description	Unit Price	Extended Price
2	2	N	EBSDL0002-D SOI, OBSERVE, SMALL FORM DOME LIGHT, 3", R/W Warehouse: ATLA obSERVE+ Dome Light - 3" Round, Dual Color - Red/White **Rear Cargo area & on Rear Hatch**	59.0000	118.00
1	1	N	EBSDL0002-D SOI, OBSERVE, SMALL FORM DOME LIGHT, 3", R/W Warehouse: ATLA obSERVE+ Dome Light - 3" Round, Dual Color - Red/White Front	59.0000	59.00
1	1	N	MISC Custom Wiring harness Relay Box Warehouse: ATLA	850.0000	850.00
1	1	N	SHOP SHOP SUPPLIES - WIRE/CONNECTORS/RELAYS/INSTALL KI Warehouse: ATLA	325.0000	325.00
1	1	N	INSTALL DSS INSTALLATION OF EQUIPMENT Warehouse: ATLA	2,395.0000	2,395.00
1	1	N	FREIGHT INCOMING FREIGHT Warehouse: ATLA	395.0000	395.00

Print Date	03/26/24
Print Time	06:45:16 PM
Page No.	6

Printed By: Jake Porter

Continued on Next Page

Sales Quote

DANA SAFETY SUPPLY, INC
4809 KOGER BLVD
GREENSBORO, NC 27407

Telephone: 800-845-0405

Sales Quote No.	526284-A
Customer No.	ALPHA

Bill To	Ship To
ALPHARETTA, CITY OF EMAIL ALL INVOICES cmiller@alpharetta.ga.us ALPHARETTA, GA 30009	(For Pickup - ATLA) ATLANTA WAREHOUSE 4729 NELSON BROGDON BLVD SUITE C SUGAR HILL, GA 30518
Contact:	**Contact:**
Telephone: 678-297-6317	**Telephone:**
E-mail: psfleet@alpharetta.ga.u	**E-mail:**

Quote Date	Ship Via	F.O.B.	Customer PO Number	Payment Method
03/26/24	GROUND SHIPMENT	PPAY & ADD TO INVOICE	ADMIN TAHOE	NET30

Entered By	Salesperson	Ordered By	Resale Number
Jake Porter	JAKE PORTER-Atlanta	JONATHAN HICKEL	

Order Quantity	Approve Quantity	Tax	Item Number / Description	Unit Price	Extended Price
2	2	N	PMPAKHNPW1 Power/Control Harness for mpower Arrow Kit connects Warehouse: ATLA	134.5500	269.10
1	1	N	PMPAKHNDS1 SOI MPOWER ARROW DIST HARNESS Warehouse: ATLA	104.4000	104.40
1	1	N	PUVBBJ00 SOI External Breakout Box for LIN COMM Warehouse: ATLA	90.0000	90.00

Approved By: _____

☐ **Approve All Items & Quantities**

Quote Good for 30 Days

Print Date	03/26/24
Print Time	06:45:16 PM
Page No.	7

Printed By: Jake Porter

Subtotal	14,861.37
Freight	0.00
Order Total	14,861.37

Sales Quote

DANA SAFETY SUPPLY, INC
4809 KOGER BLVD
GREENSBORO, NC 27407

Telephone: 800-845-0405

Sales Quote No.	526143-D
Customer No.	ALPHA

Bill To	Ship To
ALPHARETTA, CITY OF EMAIL ALL INVOICES cmiller@alpharetta.ga.us ALPHARETTA, GA 30009	(For Pickup - ATLA) ATLANTA WAREHOUSE 4729 NELSON BROGDON BLVD SUITE C SUGAR HILL, GA 30518
Contact:	**Contact:**
Telephone: 678-297-6317	**Telephone:**
E-mail: psfleet@alpharetta.ga.u	**E-mail:**

Quote Date	Ship Via	F.O.B.	Customer PO Number	Payment Method
03/26/24	GROUND SHIPMENT	PPAY & ADD TO INVOICE	PATROL TAHOE	NET30

Entered By	Salesperson	Ordered By	Resale Number
Jake Porter	JAKE PORTER-Atlanta	JONATHAN HICKEL	

Order Quantity	Approve Quantity	Tax	Item Number / Description	Unit Price	Extended Price
1	1	N	MISC SOI 55" MPower lightbar BW frt, BA Rear, RA Tips Warehouse: ATLA EMPLB01BEJ-3GE	1,995.0000	1,995.00
1	1	N	RVID-SO6-TAH-HO SOI Tahoe 21+ Rear Visual Impact Deterent Housing Onl Warehouse: ATLA RVID Housing Only - Vehicle: 21+ Chevy Tahoe Requires 6 mPower Screw Mount 3-Wire Light Heads	485.0000	485.00
2	2	N	EMPSCG2SMS4D Delivery Info: 637650 SOI, MPWR FASCIA C-N-G, 4", SM, BLK HSG, RED/WHT Warehouse: ATLA 4" 3-Wire Light w/ Screw Mount, for use with mpower Arrow Kit and Connect-n-Go, SAE Class 1 & CA Title 13, 9-32 Vdc, Black Housing, 12 LED, Dual Color - Red/White	110.2500	220.50
4	4	N	EMPSCG2SMS4M Delivery Info: 637650 SOI mpower Fascia 4" 3-wire Warehouse: ATLA	110.2500	441.00
2	2	N	EMPS2QMS4J Delivery Info: 637650 SOI, MPWR FASCIA, 4", QM, BLK HSG, RED/BLU Warehouse: ATLA NO SOI CONFIG ONLINE On Hatch above tag to shine back when hatch is open or on lip of hatch when open	110.2500	220.50

Print Date	03/26/24
Print Time	06:29:43 PM
Page No.	1

Printed By: Jake Porter

Continued on Next Page

Sales Quote

DANA SAFETY SUPPLY, INC
4809 KOGER BLVD
GREENSBORO, NC 27407

Telephone: 800-845-0405

Sales Quote No.	526143-D
Customer No.	ALPHA

Bill To	Ship To
ALPHARETTA, CITY OF EMAIL ALL INVOICES cmiller@alpharetta.ga.us ALPHARETTA, GA 30009	(For Pickup - ATLA) ATLANTA WAREHOUSE 4729 NELSON BROGDON BLVD SUITE C SUGAR HILL, GA 30518
Contact:	**Contact:**
Telephone: 678-297-6317	**Telephone:**
E-mail: psfleet@alpharetta.ga.u	**E-mail:**

Quote Date	Ship Via	F.O.B.	Customer PO Number	Payment Method
03/26/24	GROUND SHIPMENT	PPAY & ADD TO INVOICE	PATROL TAHOE	NET30

Entered By	Salesperson	Ordered By	Resale Number
Jake Porter	JAKE PORTER-Atlanta	JONATHAN HICKEL	

Order Quantity	Approve Quantity	Tax	Item Number / Description	Unit Price	Extended Price
1	1	N	ENGSA5200RSR Delivery Info: 637650 SOI, 500 SERIES KNOB/PB 200W CNTRL, +VOICE PLBK Warehouse: ATLA	746.2800	746.28
3	3	N	ENGND04102 Delivery Info: 637650 SOI 10 OUTPUT REMOTE NODE W/ MAGNETIC I.D. Warehouse: ATLA	204.3000	612.90
3	3	N	ENGHNK06 Delivery Info: 637650 SOI 10FT REMOTE NODE HARNESS Warehouse: ATLA	77.4000	232.20
1	1	N	PSRNMC1 Delivery Info: 637650 SOI Replacement Microphone & Strain Relief for #ETSA48 Warehouse: ATLA Replacement Microphone & Strain Relief for #ETSA481RSP, #ETSA482RSP	65.0000	65.00
1	1	N	PSRN4MCEXT Delivery Info: 637650 SOS MIC EXTENSION CABLE Warehouse: ATLA	58.0000	58.00
1	1	N	ENGLMK001 SOI BLUPRINT LINK FOR 2021 TAHOE Warehouse: ATLA	296.0000	296.00
1	1	N	ENGSYMD01 Delivery Info: 637650 SOI SOUND OFF / BLUEPRINT SYNC MODULE Warehouse: ATLA	228.1500	228.15

Print Date	03/26/24
Print Time	06:29:43 PM
Page No.	2

Printed By: Jake Porter

Continued on Next Page

Sales Quote

DANA SAFETY SUPPLY, INC
4809 KOGER BLVD
GREENSBORO, NC 27407

Telephone: 800-845-0405

Sales Quote No.	526143-D
Customer No.	ALPHA

Bill To	Ship To
ALPHARETTA, CITY OF EMAIL ALL INVOICES cmiller@alpharetta.ga.us ALPHARETTA, GA 30009	(For Pickup - ATLA) ATLANTA WAREHOUSE 4729 NELSON BROGDON BLVD SUITE C SUGAR HILL, GA 30518
Contact:	**Contact:**
Telephone: 678-297-6317	**Telephone:**
E-mail: psfleet@alpharetta.ga.u	**E-mail:**

Quote Date	Ship Via	F.O.B.	Customer PO Number	Payment Method
03/26/24	GROUND SHIPMENT	PPAY & ADD TO INVOICE	PATROL TAHOE	NET30

Entered By	Salesperson	Ordered By	Resale Number
Jake Porter	JAKE PORTER-Atlanta	JONATHAN HICKEL	

Order Quantity	Approve Quantity	Tax	Item Number / Description	Unit Price	Extended Price
2	2	N	ETSS100J Delivery Info: 637650 SOI 100J SERIES COMPOSITE SPEAKER Warehouse: ATLA 100J series composite speaker w/ universal bail brkt-100 watt	179.0000	358.00
1	1	N	ETSKLF100 Delivery Info: 637650 SOI LOW FREQUENCY AFTERSHOCK SIREN W/1 SPEAKERS Warehouse: ATLA	438.3000	438.30
1	1	N	ETSSLFVBK13 SOI 2021 TAHOE AFTERSHOCK DRIVER SIDE SPKR BKT Warehouse: ATLA	35.0000	35.00
4	4	N	EMPSCG4STS5RBW SOI, MPWR HD C-N-G, 4", STM, BLK HSG, RED/BLU/WHT Warehouse: ATLA 4" 3-Wire HD Light w/ Stud Mount, for use with mpower Arrow Kit and Connect-n-Go, SAE Class 1 & CA Title 13, 9-32 Vdc, Black Housing, 18 LED, Tricolor - Red/Blue/White **Mounted in upper Channel**	122.4000	489.60
4	4	N	EMPSCG4STS5RBW SOI, MPWR HD C-N-G, 4", STM, BLK HSG, RED/BLU/WHT Warehouse: ATLA 4" 3-Wire HD Light w/ Stud Mount, for use with mpower Arrow Kit and Connect-n-Go, SAE Class 1 & CA Title 13, 9-32 Vdc, Black Housing, 18 LED, Tricolor - Red/Blue/White **Mounted on side of bumper (2 per side)**	122.4000	489.60

Print Date	03/26/24
Print Time	06:29:43 PM
Page No.	3

Printed By: Jake Porter

Continued on Next Page

Sales Quote

DANA SAFETY SUPPLY, INC
4809 KOGER BLVD
GREENSBORO, NC 27407

Telephone: 800-845-0405

Sales Quote No.	526143-D
Customer No.	ALPHA

Bill To	Ship To
ALPHARETTA, CITY OF EMAIL ALL INVOICES cmiller@alpharetta.ga.us ALPHARETTA, GA 30009	(For Pickup - ATLA) ATLANTA WAREHOUSE 4729 NELSON BROGDON BLVD SUITE C SUGAR HILL, GA 30518
Contact:	**Contact:**
Telephone: 678-297-6317	**Telephone:**
E-mail: psfleet@alpharetta.ga.u	**E-mail:**

Quote Date	Ship Via	F.O.B.	Customer PO Number	Payment Method
03/26/24	GROUND SHIPMENT	PPAY & ADD TO INVOICE	PATROL TAHOE	NET30

Entered By	Salesperson	Ordered By	Resale Number
Jake Porter	JAKE PORTER-Atlanta	JONATHAN HICKEL	

Order Quantity	Approve Quantity	Tax	Item Number / Description	Unit Price	Extended Price
2	2	N	PMP4BZL03B SOI, MPOWER HD, 2 MOD 4" BLACK BEZEL Warehouse: ATLA Black 2 Module 4" Bezel (includes gasket & hardware kit) for use with mpower® HD Stud Mount Light	14.5800	29.16
2	2	N	PMPAKHNPW1 Power/Control Harness for mpower Arrow Kit connects Warehouse: ATLA	134.5500	269.10
1	1	N	PMPAKHNDS1 SOI MPOWER ARROW DIST HARNESS Warehouse: ATLA	104.4000	104.40
1	1	N	PUVBBJ00 SOI External Breakout Box for LIN COMM Warehouse: ATLA	90.0000	90.00
2	2	N	EMPS4STS5RBW SOI, MPWR HD, 4", STM, CLR HSG, RED/BLU/WHT Warehouse: ATLA HD 4" Light, 18" hard wire w/ sync option, SAE Class 1 & CA Title 13, 9-32 Vdc, Clear Lens, 18 LED, Tricolor - Red/Blue/White **Mounted under side Mirrors**	122.4000	244.80
2	2	N	PMP4BZL01B SOI 4" MPOWER HD BLACK BEZEL Warehouse: ATLA	10.8000	21.60

Print Date	03/26/24
Print Time	06:29:43 PM
Page No.	4

Printed By: Jake Porter

Continued on Next Page

Sales Quote

DANA SAFETY SUPPLY, INC
4809 KOGER BLVD
GREENSBORO, NC 27407

Telephone: 800-845-0405

Sales Quote No.	526143-D
Customer No.	ALPHA

Bill To	Ship To
ALPHARETTA, CITY OF EMAIL ALL INVOICES cmiller@alpharetta.ga.us ALPHARETTA, GA 30009	(For Pickup - ATLA) ATLANTA WAREHOUSE 4729 NELSON BROGDON BLVD SUITE C SUGAR HILL, GA 30518
Contact:	**Contact:**
Telephone: 678-297-6317	**Telephone:**
E-mail: psfleet@alpharetta.ga.u	**E-mail:**

Quote Date	Ship Via	F.O.B.	Customer PO Number	Payment Method
03/26/24	GROUND SHIPMENT	PPAY & ADD TO INVOICE	PATROL TAHOE	NET30

Entered By	Salesperson	Ordered By	Resale Number
Jake Porter	JAKE PORTER-Atlanta	JONATHAN HICKEL	

Order Quantity	Approve Quantity	Tax	Item Number / Description	Unit Price	Extended Price
1	1	N	PMP2BKUMB5-D SOI 21+ TAHOE Under Mirror Bracket Driver Side Warehouse: ATLA	19.5000	19.50
1	1	N	PMP2BKUMB5-P SOI 21+ TAHOE Under Mirror Bracket Passenger Warehouse: ATLA	19.5000	19.50
4	4	N	EMPS2QMS5RBW SOI, MPWR FASCIA, 4", QM, BLK HSG, RED/BLU/WHT Warehouse: ATLA NO SOI CONFIG ONLINE	122.4000	489.60
4	4	N	PMP2WDG15B SOI MPOWER 4" 15 DEGREE WEDGE BLACK Warehouse: ATLA	6.9500	27.80
2	2	N	EMPS4STS5RBW Delivery Info: 637650 SOI, MPWR HD, 4", STM, CLR HSG, RED/BLU/WHT Warehouse: ATLA HD 4" Light, 18" hard wire w/ sync option, SAE Class 1 & CA Title 13, 9-32 Vdc, Clear Lens, 18 LED, Tricolor - Red/Blue/White **Mounted on rear doors at B pillar**	122.4000	244.80
2	2	N	PMP2BKDGAJ SOI 4" mPOWER 90 DEGREE MOUNTING BRACKET, BLACK Warehouse: ATLA	8.9500	17.90

Print Date	03/26/24
Print Time	06:29:43 PM
Page No.	5

Printed By: Jake Porter

Continued on Next Page

Sales Quote

DANA SAFETY SUPPLY, INC
4809 KOGER BLVD
GREENSBORO, NC 27407

Telephone: 800-845-0405

Sales Quote No.	526143-D
Customer No.	ALPHA

Bill To	Ship To
ALPHARETTA, CITY OF EMAIL ALL INVOICES cmiller@alpharetta.ga.us ALPHARETTA, GA 30009	(For Pickup - ATLA) ATLANTA WAREHOUSE 4729 NELSON BROGDON BLVD SUITE C SUGAR HILL, GA 30518
Contact:	**Contact:**
Telephone: 678-297-6317	**Telephone:**
E-mail: psfleet@alpharetta.ga.u	**E-mail:**

Quote Date	Ship Via	F.O.B.	Customer PO Number	Payment Method
03/26/24	GROUND SHIPMENT	PPAY & ADD TO INVOICE	PATROL TAHOE	NET30

Entered By	Salesperson	Ordered By	Resale Number
Jake Porter	JAKE PORTER-Atlanta	JONATHAN HICKEL	

Order Quantity	Approve Quantity	Tax	Item Number / Description	Unit Price	Extended Price
4	4	N	EMPS4STS5RBW Delivery Info: 637650 SOI, MPWR HD, 4", STM, CLR HSG, RED/BLU/WHT Warehouse: ATLA HD 4" Light, 18" hard wire w/ sync option, SAE Class 1 & CA Title 13, 9-32 Vdc, Clear Lens, 18 LED, Tricolor - Red/Blue/White **Mounted in Rear side cargo window x2 per side**	122.4000	489.60
2	2	N	PMP2WSDDB Delivery Info: 637650 SOI 4" MPOWER DUAL WINDOW SHROUD-BLACK Warehouse: ATLA	15.7500	31.50
1	1	N	EBSDL0002-D SOI, OBSERVE, SMALL FORM DOME LIGHT, 3", R/W Warehouse: ATLA obSERVE+ Dome Light - 3" Round, Dual Color - Red/White	59.0000	59.00
1	1	N	EBSDL0002-D Delivery Info: 637650 SOI obSERVE+ Dome Light 3", R/W Warehouse: ATLA obSERVE+ Dome Light - 3" Round, Dual Color - Red/White Prisoner Compartment area - Assigned to Multi press button	59.0000	59.00

Print Date	03/26/24
Print Time	06:29:43 PM
Page No.	6

Printed By: Jake Porter

Continued on Next Page

Sales Quote

DANA SAFETY SUPPLY, INC
4809 KOGER BLVD
GREENSBORO, NC 27407

Telephone: 800-845-0405

Sales Quote No.	526143-D
Customer No.	ALPHA

Bill To	Ship To
ALPHARETTA, CITY OF EMAIL ALL INVOICES cmiller@alpharetta.ga.us ALPHARETTA, GA 30009	(For Pickup - ATLA) ATLANTA WAREHOUSE 4729 NELSON BROGDON BLVD SUITE C SUGAR HILL, GA 30518
Contact:	**Contact:**
Telephone: 678-297-6317	**Telephone:**
E-mail: psfleet@alpharetta.ga.u	**E-mail:**

Quote Date	Ship Via	F.O.B.	Customer PO Number	Payment Method
03/26/24	GROUND SHIPMENT	PPAY & ADD TO INVOICE	PATROL TAHOE	NET30

Entered By	Salesperson	Ordered By	Resale Number
Jake Porter	JAKE PORTER-Atlanta	JONATHAN HICKEL	

Order Quantity	Approve Quantity	Tax	Item Number / Description	Unit Price	Extended Price
2	2	N	EBSDL0002-D Delivery Info: 637650 SOI obSERVE+ Dome Light 3", R/W Warehouse: ATLA obSERVE+ Dome Light - 3" Round, Dual Color - Red/White **1 in cargo Area, 1 on rear Hatch** Wire to toggle on D Pillar	59.0000	118.00
1	1	N	36-4045 Westin 2021 Chevy Tahoe Elite Push Bumper Warehouse: ATLA 36-4045	425.0000	425.00
1	1	N	36-4045PB Westin 2021 Chevy Tahoe Elite Pit Bars Warehouse: ATLA	329.0000	329.00
1	1	N	36-6015SMP4 Westin, Elite Push Bumper Light Channel Warehouse: ATLA	42.0000	42.00
1	1	N	36-4045WC WESTIN Wire Cover Warehouse: ATLA 36-4045WC	42.0000	42.00

Print Date	03/26/24
Print Time	06:29:43 PM
Page No.	7

Printed By: Jake Porter

Continued on Next Page

Sales Quote

DANA SAFETY SUPPLY, INC
4809 KOGER BLVD
GREENSBORO, NC 27407

Telephone: 800-845-0405

Sales Quote No.	526143-D
Customer No.	ALPHA

Bill To	Ship To
ALPHARETTA, CITY OF EMAIL ALL INVOICES cmiller@alpharetta.ga.us ALPHARETTA, GA 30009	(For Pickup - ATLA) ATLANTA WAREHOUSE 4729 NELSON BROGDON BLVD SUITE C SUGAR HILL, GA 30518
Contact:	**Contact:**
Telephone: 678-297-6317	**Telephone:**
E-mail: psfleet@alpharetta.ga.u	**E-mail:**

Quote Date	Ship Via	F.O.B.	Customer PO Number	Payment Method
03/26/24	GROUND SHIPMENT	PPAY & ADD TO INVOICE	PATROL TAHOE	NET30

Entered By	Salesperson	Ordered By	Resale Number
Jake Porter	JAKE PORTER-Atlanta	JONATHAN HICKEL	

Order Quantity	Approve Quantity	Tax	Item Number / Description	Unit Price	Extended Price
1	1	N	GK10342UHK SMC DUAL VERT. RACK 2 UNIV. LOCKS W/ HC KEY Warehouse: ATLA "Dual T-Rail Mount2 Universal XL Handcuff Key Override"	418.0000	418.00
1	1	N	PK1151TAH21 SMC 10VS XL C UNCOATED POLY PARTITION Warehouse: ATLA #10XL C Horizontal Sliding Window Uncoated Polycarbonate With Expanded Metal Window Security Screen XL Panel Partition	769.0000	769.00
1	1	N	QK0215TAH21 SMC REPLCAMENT SET W. RESTRAINT Warehouse: ATLA QK0215TAH21 INCLUDES EXPANDED METAL #12 EXPANDED METAL CARGO BARRIER	1,458.0000	1,458.00
1	1	N	WK0514TAH21 WINDOW BARRIER VS STEEL VERTICAL Warehouse: ATLA WK0514TAH21	230.3000	230.30

Print Date	03/26/24
Print Time	06:29:43 PM
Page No.	8

Printed By: Jake Porter

Continued on Next Page

Sales Quote

DANA SAFETY SUPPLY, INC
4809 KOGER BLVD
GREENSBORO, NC 27407

Telephone: 800-845-0405

Sales Quote No.	526143-D
Customer No.	ALPHA

Bill To	Ship To
ALPHARETTA, CITY OF EMAIL ALL INVOICES cmiller@alpharetta.ga.us ALPHARETTA, GA 30009	(For Pickup - ATLA) ATLANTA WAREHOUSE 4729 NELSON BROGDON BLVD SUITE C SUGAR HILL, GA 30518
Contact:	**Contact:**
Telephone: 678-297-6317	**Telephone:**
E-mail: psfleet@alpharetta.ga.u	**E-mail:**

Quote Date	Ship Via	F.O.B.	Customer PO Number	Payment Method
03/26/24	GROUND SHIPMENT	PPAY & ADD TO INVOICE	PATROL TAHOE	NET30

Entered By	Salesperson	Ordered By	Resale Number
Jake Porter	JAKE PORTER-Atlanta	JONATHAN HICKEL	

Order Quantity	Approve Quantity	Tax	Item Number / Description	Unit Price	Extended Price
1	1	N	LOFT-21TAH-EC LUND 21+ Tahoe Loft Electronic Equipment Tray Warehouse: ATLA LOFT-21TAH-EC 21+ Tahoe Loft Electronic Equipment Tray - Interior Dimension 16.5" x 40" LOFT-21TAH-EC Includes removable stand-off electronics installation platform, allowing "bench" prep prior to installation. (Optional Accessories Available)	801.0000	801.00
1	1	N	C14855-COVIN Truck Vault Custom TruckVault for Tahoe 21+ Warehouse: ATLA Custom TruckVault Covington PD Battery Access / Magnum Vault Cargo Tie-Down Trim Vehicle Model/Year:2021+ Tahoe Prisoner Cage will accommodate Drawer Fronts: Black Composite Exterior Carpet Color: Black Drawer Interior Carpet: Grey Drawer Lock(s): Push Button with key override	2,995.0000	2,995.00
1	1	N	425-6162 Delivery Info: 639730 JOTTO, CONSOLE Warehouse: ATLA Faceplates for Console: 425-6295 425-6281 BLANK FILLERS FOR REST OF CONSOLE	298.3100	298.31

Print Date	03/26/24
Print Time	06:29:43 PM
Page No.	9

Printed By: Jake Porter

Continued on Next Page

Sales Quote

DANA SAFETY SUPPLY, INC
4809 KOGER BLVD
GREENSBORO, NC 27407

Telephone: 800-845-0405

Sales Quote No.	526143-D
Customer No.	ALPHA

Bill To	Ship To
ALPHARETTA, CITY OF EMAIL ALL INVOICES cmiller@alpharetta.ga.us ALPHARETTA, GA 30009	(For Pickup - ATLA) ATLANTA WAREHOUSE 4729 NELSON BROGDON BLVD SUITE C SUGAR HILL, GA 30518
Contact:	**Contact:**
Telephone: 678-297-6317	**Telephone:**
E-mail: psfleet@alpharetta.ga.u	**E-mail:**

Quote Date	Ship Via	F.O.B.	Customer PO Number	Payment Method
03/26/24	GROUND SHIPMENT	PPAY & ADD TO INVOICE	PATROL TAHOE	NET30

Entered By	Salesperson	Ordered By	Resale Number
Jake Porter	JAKE PORTER-Atlanta	JONATHAN HICKEL	

Order Quantity	Approve Quantity	Tax	Item Number / Description	Unit Price	Extended Price
1	1	N	425-6568 JD Tahoe PPV 2021+ (28" FLP - Front/Rear Legs) GM/CHEV Warehouse: ATLA 425-6568 Tahoe PPV 2021+ (28" FLP - Front/Rear Legs) GM/CHEVY	218.0000	218.00
1	1	N	425-3704 Delivery Info: 639730 JOTTO DUAL INTERNAL CUP HOLDER Warehouse: ATLA	59.6600	59.66
1	1	N	425-0017 Delivery Info: 639730 JOTTO PT Hinged Brother Armrest Warehouse: ATLA Designed to mount to either horizontal or vertical, Jotto Desk's new Hinged Brother Armrest is an easy to use flip-up armrest and printer mount all in one. Engineered for the installer, the Brother Hinged Armrest works with Floor Plates or Consoles, the height is adjusted with simple hand tools, and Cable strain relief protects connectors on the printer from damage. Created with the user in mind the armrest position can be adjusted for the user's preference. The Hinged Brother Armrest fits the Brother PocketJet 6/7 Printer and paper roll.	427.8000	427.80
1	1	N	425-0020-5182 JD Laptop mount for Tahoe 21+, GK Plate Warehouse: ATLA	321.2500	321.25
2	2	N	MMSU-1 Delivery Info: ONHAND MAGNETIC MIC SINGLE UNIT CONVERSION KIT Warehouse: ATLA	34.0000	68.00

Print Date	03/26/24
Print Time	06:29:43 PM
Page No.	10

Printed By: Jake Porter

Continued on Next Page

Sales Quote

DANA SAFETY SUPPLY, INC
4809 KOGER BLVD
GREENSBORO, NC 27407

Telephone: 800-845-0405

Sales Quote No.	526143-D
Customer No.	ALPHA

Bill To	Ship To
ALPHARETTA, CITY OF EMAIL ALL INVOICES cmiller@alpharetta.ga.us ALPHARETTA, GA 30009	(For Pickup - ATLA) ATLANTA WAREHOUSE 4729 NELSON BROGDON BLVD SUITE C SUGAR HILL, GA 30518
Contact:	**Contact:**
Telephone: 678-297-6317	**Telephone:**
E-mail: psfleet@alpharetta.ga.u	**E-mail:**

Quote Date	Ship Via	F.O.B.	Customer PO Number	Payment Method
03/26/24	GROUND SHIPMENT	PPAY & ADD TO INVOICE	PATROL TAHOE	NET30

Entered By	Salesperson	Ordered By	Resale Number
Jake Porter	JAKE PORTER-Atlanta	JONATHAN HICKEL	

Order Quantity	Approve Quantity	Tax	Item Number / Description	Unit Price	Extended Price
2	2	N	C-MCB Delivery Info: 642217 HAV CONSOLE MICROPHONE CLIP BRACKET Warehouse: ATLA	18.0000	36.00
1	1	N	USBC100-5461 Delivery Info: 642218 LIND POWER SUPPLY Warehouse: ATLA	142.0000	142.00
1	1	N	PJ822 Delivery Info: TR-GBKO(2) BRO POCKET JET 8 (THERMAL PRINTER W/ USB Warehouse: ATLA	376.0000	376.00
1	1	N	LB3692 Delivery Info: TR-TAMP(1) BROT 14' DIRECT WIRE 12 VDC POWER CORD Warehouse: ATLA	26.9500	26.95
1	1	N	LBX110001 BRO USB Cable Type A to C, 10 ft Warehouse: ATLA	25.9500	25.95
1	1	N	14.0434 Delivery Info: TR-MARI(4) ABLE2 Multi-Port Accessory Box with USB Warehouse: ATLA	39.0000	39.00
1	1	N	T62213BLK TIGERT 21-22 SPECIAL SERVICE TAHOE Q/IRONBAND BLK Warehouse: ATLA	196.0000	196.00

Print Date	03/26/24
Print Time	06:29:43 PM
Page No.	11

Printed By: Jake Porter

Continued on Next Page

Sales Quote

DANA SAFETY SUPPLY, INC
4809 KOGER BLVD
GREENSBORO, NC 27407

Telephone: 800-845-0405

Sales Quote No.	526143-D
Customer No.	ALPHA

Bill To	Ship To
ALPHARETTA, CITY OF EMAIL ALL INVOICES cmiller@alpharetta.ga.us ALPHARETTA, GA 30009	(For Pickup - ATLA) ATLANTA WAREHOUSE 4729 NELSON BROGDON BLVD SUITE C SUGAR HILL, GA 30518
Contact:	**Contact:**
Telephone: 678-297-6317	**Telephone:**
E-mail: psfleet@alpharetta.ga.u	**E-mail:**

Quote Date	Ship Via	F.O.B.	Customer PO Number	Payment Method
03/26/24	GROUND SHIPMENT	PPAY & ADD TO INVOICE	PATROL TAHOE	NET30

Entered By	Salesperson	Ordered By	Resale Number
Jake Porter	JAKE PORTER-Atlanta	JONATHAN HICKEL	

Order Quantity	Approve Quantity	Tax	Item Number / Description	Unit Price	Extended Price
1	1	N	INSTALL DSS INSTALLATION OF EQUIPMENT - Utility Rocket Warehouse: ATLA	295.0000	295.00
1	1	N	INSTALL DSS INSTALLATION OF EQUIPMENT - Motorola Radio Warehouse: ATLA	195.0000	195.00
1	1	N	MISC Custom Wiring Harness Relay Box Warehouse: ATLA	850.0000	850.00
1	1	N	FREIGHT INCOMING FREIGHT Warehouse: ATLA	395.0000	395.00
1	1	N	SHOP SHOP SUPPLIES - WIRE/CONNECTORS/RELAYS/INSTALL KI Warehouse: ATLA	325.0000	325.00
1	1	N	INSTALL DSS INSTALLATION OF EQUIPMENT Warehouse: ATLA	2,895.0000	2,895.00
2	2	N	SBT201 Delivery Info: 642219 BLUELINE SEATBELT LOCK- TOP BUTTON Warehouse: ATLA	56.0000	112.00

Print Date	03/26/24
Print Time	06:29:43 PM
Page No.	12

Printed By: Jake Porter

Continued on Next Page

Sales Quote

DANA SAFETY SUPPLY, INC
4809 KOGER BLVD
GREENSBORO, NC 27407

Telephone: 800-845-0405

Sales Quote No.	526143-D
Customer No.	ALPHA

Bill To	Ship To
ALPHARETTA, CITY OF EMAIL ALL INVOICES cmiller@alpharetta.ga.us ALPHARETTA, GA 30009	(For Pickup - ATLA) ATLANTA WAREHOUSE 4729 NELSON BROGDON BLVD SUITE C SUGAR HILL, GA 30518
Contact:	**Contact:**
Telephone: 678-297-6317	**Telephone:**
E-mail: psfleet@alpharetta.ga.u	**E-mail:**

Quote Date	Ship Via	F.O.B.	Customer PO Number	Payment Method
03/26/24	GROUND SHIPMENT	PPAY & ADD TO INVOICE	PATROL TAHOE	NET30

Entered By	Salesperson	Ordered By	Resale Number
Jake Porter	JAKE PORTER-Atlanta	JONATHAN HICKEL	

Order Quantity	Approve Quantity	Tax	Item Number / Description	Unit Price	Extended Price
4	4	N	SB-KEY Delivery Info: 642219 BLUELINE - SEATBELT LOCK - KEY Warehouse: ATLA	2.5000	10.00
1	1	N	HINVI-2-6 Delivery Info: TR/ROCK HINVI - Non Visible Personal Safety Lighthead Warehouse: ATLA HINVI - Non Visible, Personal Safety Lighthead, 9-32v Surface mount	208.0000	208.00
1	1	N	NONSTOCK Mounting bracket for UV light Warehouse: ATLA	15.0000	15.00
1	1	N	7160-0250-01 GJ NOTEPAD V COMPUTER CRADLE W/ TALL BRACKETS Warehouse: ATLA DESIGNED FOR THE EXTRA THICKNESS REQUIRED BY RUGGEDIZED LAPTOPS --- **********	259.0000	259.00

Approved By: _____

☐ **Approve All Items & Quantities**

Quote Good for 30 Days

Print Date	03/26/24
Print Time	06:29:43 PM
Page No.	13

Printed By: Jake Porter

Subtotal	25,049.51
Freight	0.00
Order Total	25,049.51

Sales Quote

DANA SAFETY SUPPLY, INC
4809 KOGER BLVD
GREENSBORO, NC 27407

Telephone: 800-845-0405

Sales Quote No.	526253-A
Customer No.	ALPHA

Bill To	Ship To
ALPHARETTA, CITY OF EMAIL ALL INVOICES cmiller@alpharetta.ga.us ALPHARETTA, GA 30009	ALPHARETTA, CITY OF **EMAIL ALL INVOICES** psfleet@alpharetta.ga.us Alpharetta, GA 30009
Contact: **Telephone:** 678-297-6317 **E-mail:** psfleet@alpharetta.ga.u	**Contact:** David Freeman **Telephone:** 678-297-6300 **E-mail:** psfleet@alpharetta.ga.us

Quote Date	Ship Via	F.O.B.	Customer PO Number	Payment Method
03/26/24	GROUND SHIPMENT	PPAY & ADD TO INVOICE	K9 TAHOE	NET30

Entered By	Salesperson	Ordered By	Resale Number
Jake Porter	JAKE PORTER-Atlanta	JONATHAN HICKEL	

Order Quantity	Approve Quantity	Tax	Item Number / Description	Unit Price	Extended Price
1	1	N	MISC SOI 55" MPower lightbar BW frt, BA Rear, RA Tips Warehouse: ATLA EMPLB01BEJ-3GE	1,995.0000	1,995.00
1	1	N	RVID-SO6-TAH-HO SOI Tahoe 21+ Rear Visual Impact Deterent Housing Onl Warehouse: ATLA RVID Housing Only - Vehicle: 21+ Chevy Tahoe Requires 6 mPower Screw Mount 3-Wire Light Heads	485.0000	485.00
2	2	N	EMPSCG2SMS4D Delivery Info: 637650 SOI, MPWR FASCIA C-N-G, 4", SM, BLK HSG, RED/WHT Warehouse: ATLA 4" 3-Wire Light w/ Screw Mount, for use with mpower Arrow Kit and Connect-n-Go, SAE Class 1 & CA Title 13, 9-32 Vdc, Black Housing, 12 LED, Dual Color - Red/White	110.2500	220.50
4	4	N	EMPSCG2SMS4M Delivery Info: 637650 SOI mpower Fascia 4" 3-wire Warehouse: ATLA	110.2500	441.00
2	2	N	EMPS2QMS4J Delivery Info: 637650 SOI, MPWR FASCIA, 4", QM, BLK HSG, RED/BLU Warehouse: ATLA NO SOI CONFIG ONLINE On Hatch above tag to shine back when hatch is open or on lip of hatch when open	110.2500	220.50

Print Date	03/26/24
Print Time	06:18:52 PM
Page No.	1

Printed By: Jake Porter

Continued on Next Page

Sales Quote

DANA SAFETY SUPPLY, INC
4809 KOGER BLVD
GREENSBORO, NC 27407

Telephone: 800-845-0405

Sales Quote No.	526253-A
Customer No.	ALPHA

Bill To	Ship To
ALPHARETTA, CITY OF EMAIL ALL INVOICES cmiller@alpharetta.ga.us ALPHARETTA, GA 30009	ALPHARETTA, CITY OF **EMAIL ALL INVOICES** psfleet@alpharetta.ga.us Alpharetta, GA 30009
Contact: **Telephone:** 678-297-6317 **E-mail:** psfleet@alpharetta.ga.u	**Contact:** David Freeman **Telephone:** 678-297-6300 **E-mail:** psfleet@alpharetta.ga.us

Quote Date	Ship Via	F.O.B.	Customer PO Number	Payment Method
03/26/24	GROUND SHIPMENT	PPAY & ADD TO INVOICE	K9 TAHOE	NET30

Entered By	Salesperson	Ordered By	Resale Number
Jake Porter	JAKE PORTER-Atlanta	JONATHAN HICKEL	

Order Quantity	Approve Quantity	Tax	Item Number / Description	Unit Price	Extended Price
1	1	N	ENGSA5200RSR Delivery Info: 637650 SOI, 500 SERIES KNOB/PB 200W CNTRL, +VOICE PLBK Warehouse: ATLA	746.2800	746.28
3	3	N	ENGND04102 Delivery Info: 637650 SOI 10 OUTPUT REMOTE NODE W/ MAGNETIC I.D. Warehouse: ATLA	204.3000	612.90
3	3	N	ENGHNK06 Delivery Info: 637650 SOI 10FT REMOTE NODE HARNESS Warehouse: ATLA	77.4000	232.20
1	1	N	PSRNMC1 Delivery Info: 637650 SOI Replacement Microphone & Strain Relief for #ETSA48 Warehouse: ATLA Replacement Microphone & Strain Relief for #ETSA481RSP, #ETSA482RSP	65.0000	65.00
1	1	N	PSRN4MCEXT Delivery Info: 637650 SOS MIC EXTENSION CABLE Warehouse: ATLA	58.0000	58.00
1	1	N	ENGLMK001 SOI BLUPRINT LINK FOR 2021 TAHOE Warehouse: ATLA	296.0000	296.00
1	1	N	ENGSYMD01 Delivery Info: 637650 SOI SOUND OFF / BLUEPRINT SYNC MODULE Warehouse: ATLA	228.1500	228.15

Print Date	03/26/24
Print Time	06:18:52 PM
Page No.	2

Printed By: Jake Porter

Continued on Next Page

Sales Quote

DANA SAFETY SUPPLY, INC
4809 KOGER BLVD
GREENSBORO, NC 27407

Telephone: 800-845-0405

Sales Quote No.	526253-A
Customer No.	ALPHA

Bill To	Ship To
ALPHARETTA, CITY OF EMAIL ALL INVOICES cmiller@alpharetta.ga.us ALPHARETTA, GA 30009	ALPHARETTA, CITY OF **EMAIL ALL INVOICES** psfleet@alpharetta.ga.us Alpharetta, GA 30009
Contact: **Telephone:** 678-297-6317 **E-mail:** psfleet@alpharetta.ga.u	**Contact:** David Freeman **Telephone:** 678-297-6300 **E-mail:** psfleet@alpharetta.ga.us

Quote Date	Ship Via	F.O.B.	Customer PO Number	Payment Method
03/26/24	GROUND SHIPMENT	PPAY & ADD TO INVOICE	K9 TAHOE	NET30

Entered By	Salesperson	Ordered By	Resale Number
Jake Porter	JAKE PORTER-Atlanta	JONATHAN HICKEL	

Order Quantity	Approve Quantity	Tax	Item Number / Description	Unit Price	Extended Price
2	2	N	ETSS100J Delivery Info: 637650 SOI 100J SERIES COMPOSITE SPEAKER Warehouse: ATLA 100J series composite speaker w/ universal bail brkt-100 watt	179.0000	358.00
1	1	N	ETSKLF100 Delivery Info: 637650 SOI LOW FREQUENCY AFTERSHOCK SIREN W/1 SPEAKERS Warehouse: ATLA	438.3000	438.30
1	1	N	ETSSLFVBK13 SOI 2021 TAHOE AFTERSHOCK DRIVER SIDE SPKR BKT Warehouse: ATLA	35.0000	35.00
4	4	N	EMPSCG4STS5RBW SOI, MPWR HD C-N-G, 4", STM, BLK HSG, RED/BLU/WHT Warehouse: ATLA 4" 3-Wire HD Light w/ Stud Mount, for use with mpower Arrow Kit and Connect-n-Go, SAE Class 1 & CA Title 13, 9-32 Vdc, Black Housing, 18 LED, Tricolor - Red/Blue/White **Mounted in upper Channel**	122.4000	489.60

Print Date	03/26/24
Print Time	06:18:52 PM
Page No.	3

Printed By: Jake Porter

Continued on Next Page

Sales Quote

DANA SAFETY SUPPLY, INC
4809 KOGER BLVD
GREENSBORO, NC 27407

Telephone: 800-845-0405

Sales Quote No.	526253-A
Customer No.	ALPHA

Bill To	Ship To
ALPHARETTA, CITY OF EMAIL ALL INVOICES cmiller@alpharetta.ga.us ALPHARETTA, GA 30009	ALPHARETTA, CITY OF **EMAIL ALL INVOICES** psfleet@alpharetta.ga.us Alpharetta, GA 30009
Contact: **Telephone:** 678-297-6317 **E-mail:** psfleet@alpharetta.ga.u	**Contact:** David Freeman **Telephone:** 678-297-6300 **E-mail:** psfleet@alpharetta.ga.us

Quote Date	Ship Via	F.O.B.	Customer PO Number	Payment Method
03/26/24	GROUND SHIPMENT	PPAY & ADD TO INVOICE	K9 TAHOE	NET30

Entered By	Salesperson	Ordered By	Resale Number
Jake Porter	JAKE PORTER-Atlanta	JONATHAN HICKEL	

Order Quantity	Approve Quantity	Tax	Item Number / Description	Unit Price	Extended Price
4	4	N	EMPSCG4STS5RBW SOI, MPWR HD C-N-G, 4", STM, BLK HSG, RED/BLU/WHT Warehouse: ATLA 4" 3-Wire HD Light w/ Stud Mount, for use with mpower Arrow Kit and Connect-n-Go, SAE Class 1 & CA Title 13, 9-32 Vdc, Black Housing, 18 LED, Tricolor - Red/Blue/White (2) Mounted on each side of Bumper	122.4000	489.60
2	2	N	PMP4BZL03B SOI, MPOWER HD, 2 MOD 4" BLACK BEZEL Warehouse: ATLA Black 2 Module 4" Bezel (includes gasket & hardware kit) for use with mpower® HD Stud Mount Light	14.5800	29.16
2	2	N	PMPAKHNPW1 Power/Control Harness for mpower Arrow Kit connects Warehouse: ATLA	134.5500	269.10
1	1	N	PMPAKHNDS1 SOI MPOWER ARROW DIST HARNESS Warehouse: ATLA	104.4000	104.40
1	1	N	PUVBBJ00 SOI External Breakout Box for LIN COMM Warehouse: ATLA	90.0000	90.00

Print Date	03/26/24
Print Time	06:18:52 PM
Page No.	4

Printed By: Jake Porter

Continued on Next Page

Sales Quote

DANA SAFETY SUPPLY, INC
4809 KOGER BLVD
GREENSBORO, NC 27407

Telephone: 800-845-0405

Sales Quote No.	526253-A
Customer No.	ALPHA

Bill To	Ship To
ALPHARETTA, CITY OF EMAIL ALL INVOICES cmiller@alpharetta.ga.us ALPHARETTA, GA 30009	ALPHARETTA, CITY OF **EMAIL ALL INVOICES** psfleet@alpharetta.ga.us Alpharetta, GA 30009
Contact: **Telephone:** 678-297-6317 **E-mail:** psfleet@alpharetta.ga.u	**Contact:** David Freeman **Telephone:** 678-297-6300 **E-mail:** psfleet@alpharetta.ga.us

Quote Date	Ship Via	F.O.B.	Customer PO Number	Payment Method
03/26/24	GROUND SHIPMENT	PPAY & ADD TO INVOICE	K9 TAHOE	NET30

Entered By	Salesperson	Ordered By	Resale Number
Jake Porter	JAKE PORTER-Atlanta	JONATHAN HICKEL	

Order Quantity	Approve Quantity	Tax	Item Number / Description	Unit Price	Extended Price
2	2	N	EMPS4STS5RBW SOI, MPWR HD, 4", STM, CLR HSG, RED/BLU/WHT Warehouse: ATLA HD 4" Light, 18" hard wire w/ sync option, SAE Class 1 & CA Title 13, 9-32 Vdc, Clear Lens, 18 LED, Tricolor - Red/Blue/White **Mounted under side Mirrors**	122.4000	244.80
2	2	N	PMP4BZL01B SOI 4" MPOWER HD BLACK BEZEL Warehouse: ATLA	10.8000	21.60
1	1	N	PMP2BKUMB5-D SOI 21+ TAHOE Under Mirror Bracket Driver Side Warehouse: ATLA	19.5000	19.50
1	1	N	PMP2BKUMB5-P SOI 21+ TAHOE Under Mirror Bracket Passenger Warehouse: ATLA	19.5000	19.50
4	4	N	EMPS2QMS5RBW SOI, MPWR FASCIA, 4", QM, BLK HSG, RED/BLU/WHT Warehouse: ATLA NO SOI CONFIG ONLINE Mounted on running boards (2) per side	122.4000	489.60
4	4	N	PMP2WDG15B SOI MPOWER 4" 15 DEGREE WEDGE BLACK Warehouse: ATLA	6.9500	27.80

Print Date	03/26/24
Print Time	06:18:52 PM
Page No.	5

Printed By: Jake Porter

Continued on Next Page

Sales Quote

DANA SAFETY SUPPLY, INC
4809 KOGER BLVD
GREENSBORO, NC 27407

Telephone: 800-845-0405

Sales Quote No.	526253-A
Customer No.	ALPHA

Bill To	Ship To
ALPHARETTA, CITY OF EMAIL ALL INVOICES cmiller@alpharetta.ga.us ALPHARETTA, GA 30009	ALPHARETTA, CITY OF **EMAIL ALL INVOICES** psfleet@alpharetta.ga.us Alpharetta, GA 30009
Contact: **Telephone:** 678-297-6317 **E-mail:** psfleet@alpharetta.ga.u	**Contact:** David Freeman **Telephone:** 678-297-6300 **E-mail:** psfleet@alpharetta.ga.us

Quote Date	Ship Via	F.O.B.	Customer PO Number	Payment Method
03/26/24	GROUND SHIPMENT	PPAY & ADD TO INVOICE	K9 TAHOE	NET30

Entered By	Salesperson	Ordered By	Resale Number
Jake Porter	JAKE PORTER-Atlanta	JONATHAN HICKEL	

Order Quantity	Approve Quantity	Tax	Item Number / Description	Unit Price	Extended Price
2	2	N	EMPS4STS5RBW Delivery Info: 637650 SOI, MPWR HD, 4", STM, CLR HSG, RED/BLU/WHT Warehouse: ATLA HD 4" Light, 18" hard wire w/ sync option, SAE Class 1 & CA Title 13, 9-32 Vdc, Clear Lens, 18 LED, Tricolor - Red/Blue/White **Mounted on rear doors at B pillar**	122.4000	244.80
2	2	N	PMP2BKDGAJ SOI 4" mPOWER 90 DEGREE MOUNTING BRACKET, BLACK Warehouse: ATLA	8.9500	17.90
4	4	N	EMPS4STS5RBW Delivery Info: 637650 SOI, MPWR HD, 4", STM, CLR HSG, RED/BLU/WHT Warehouse: ATLA HD 4" Light, 18" hard wire w/ sync option, SAE Class 1 & CA Title 13, 9-32 Vdc, Clear Lens, 18 LED, Tricolor - Red/Blue/White **Mounted in Rear side cargo window x2 per side**	122.4000	489.60
2	2	N	PMP2WSDDB Delivery Info: 637650 SOI 4" MPOWER DUAL WINDOW SHROUD-BLACK Warehouse: ATLA	15.7500	31.50
1	1	N	EBSDL0002-D SOI, OBSERVE, SMALL FORM DOME LIGHT, 3", R/W Warehouse: ATLA obSERVE+ Dome Light - 3" Round, Dual Color - Red/White	59.0000	59.00

Print Date	03/26/24
Print Time	06:18:52 PM
Page No.	6

Printed By: Jake Porter

Continued on Next Page

Sales Quote

DANA SAFETY SUPPLY, INC
4809 KOGER BLVD
GREENSBORO, NC 27407

Telephone: 800-845-0405

Sales Quote No.	526253-A
Customer No.	ALPHA

Bill To	Ship To
ALPHARETTA, CITY OF EMAIL ALL INVOICES cmiller@alpharetta.ga.us ALPHARETTA, GA 30009	ALPHARETTA, CITY OF **EMAIL ALL INVOICES** psfleet@alpharetta.ga.us Alpharetta, GA 30009
Contact: **Telephone:** 678-297-6317 **E-mail:** psfleet@alpharetta.ga.u	**Contact:** David Freeman **Telephone:** 678-297-6300 **E-mail:** psfleet@alpharetta.ga.us

Quote Date	Ship Via	F.O.B.	Customer PO Number	Payment Method
03/26/24	GROUND SHIPMENT	PPAY & ADD TO INVOICE	K9 TAHOE	NET30

Entered By	Salesperson	Ordered By	Resale Number
Jake Porter	JAKE PORTER-Atlanta	JONATHAN HICKEL	

Order Quantity	Approve Quantity	Tax	Item Number / Description	Unit Price	Extended Price
1	1	N	EBSDL0002-D Delivery Info: 637650 SOI obSERVE+ Dome Light 3", R/W Warehouse: ATLA obSERVE+ Dome Light - 3" Round, Dual Color - Red/White Prisoner Compartment area - Assigned to Multi press button	59.0000	59.00
2	2	N	EBSDL0002-D Delivery Info: 637650 SOI obSERVE+ Dome Light 3", R/W Warehouse: ATLA obSERVE+ Dome Light - 3" Round, Dual Color - Red/White **1 in cargo Area, 1 on rear Hatch** Wire to toggle on D Pillar	59.0000	118.00
1	1	N	36-4045 Westin 2021 Chevy Tahoe Elite Push Bumper Warehouse: ATLA 36-4045	425.0000	425.00
1	1	N	36-4045PB Westin 2021 Chevy Tahoe Elite Pit Bars Warehouse: ATLA	329.0000	329.00
1	1	N	36-6015SMP4 Westin, Elite Push Bumper Light Channel Warehouse: ATLA	42.0000	42.00

Print Date	03/26/24
Print Time	06:18:52 PM
Page No.	7

Printed By: Jake Porter

Continued on Next Page

Sales Quote

DANA SAFETY SUPPLY, INC
4809 KOGER BLVD
GREENSBORO, NC 27407

Telephone: 800-845-0405

Sales Quote No.	526253-A
Customer No.	ALPHA

Bill To	Ship To
ALPHARETTA, CITY OF EMAIL ALL INVOICES cmiller@alpharetta.ga.us ALPHARETTA, GA 30009	ALPHARETTA, CITY OF **EMAIL ALL INVOICES** psfleet@alpharetta.ga.us Alpharetta, GA 30009
Contact: **Telephone:** 678-297-6317 **E-mail:** psfleet@alpharetta.ga.u	**Contact:** David Freeman **Telephone:** 678-297-6300 **E-mail:** psfleet@alpharetta.ga.us

Quote Date	Ship Via	F.O.B.	Customer PO Number	Payment Method
03/26/24	GROUND SHIPMENT	PPAY & ADD TO INVOICE	K9 TAHOE	NET30

Entered By	Salesperson	Ordered By	Resale Number
Jake Porter	JAKE PORTER-Atlanta	JONATHAN HICKEL	

Order Quantity	Approve Quantity	Tax	Item Number / Description	Unit Price	Extended Price
1	1	N	36-4045WC WESTIN Wire Cover Warehouse: ATLA 36-4045WC	42.0000	42.00
1	1	N	K9-C26 HAV STD K-9 FOR 2021 TAHOE WHITE Warehouse: ATLA K9-C26	3,179.5200	3,179.52
1	1	N	K9-A-103 HAV K9 Transport Water Bowl Option Warehouse: ATLA	76.0000	76.00
1	1	N	HP5020 ACE K9 HOT-N-POP PRO TEMP ALARM & DOOR SYSTEM Warehouse: ATLA MAKE, MODEL, YEAR:	1,498.0000	1,498.00
1	1	N	AWD-7040 ACEK9 ACE WATCHDOG PRO FOR USE WITH PRO ALARM Warehouse: ATLA All orders for AceWatchDogTM require a completed setup form!!!! AceWatchDogTM for use with Pro Alarm Systems AceWatchDog Server Service is $168.00 Per Year and the First Year is Included with New Unit. More Info: www.acek9.com/awd.html	898.0000	898.00

Print Date	03/26/24
Print Time	06:18:52 PM
Page No.	8

Printed By: Jake Porter

Continued on Next Page

Sales Quote

DANA SAFETY SUPPLY, INC
4809 KOGER BLVD
GREENSBORO, NC 27407

Telephone: 800-845-0405

Sales Quote No.	526253-A
Customer No.	ALPHA

Bill To	Ship To
ALPHARETTA, CITY OF EMAIL ALL INVOICES cmiller@alpharetta.ga.us ALPHARETTA, GA 30009	ALPHARETTA, CITY OF **EMAIL ALL INVOICES** psfleet@alpharetta.ga.us Alpharetta, GA 30009
Contact: **Telephone:** 678-297-6317 **E-mail:** psfleet@alpharetta.ga.u	**Contact:** David Freeman **Telephone:** 678-297-6300 **E-mail:** psfleet@alpharetta.ga.us

Quote Date	Ship Via	F.O.B.	Customer PO Number	Payment Method
03/26/24	GROUND SHIPMENT	PPAY & ADD TO INVOICE	K9 TAHOE	NET30

Entered By	Salesperson	Ordered By	Resale Number
Jake Porter	JAKE PORTER-Atlanta	JONATHAN HICKEL	

Order Quantity	Approve Quantity	Tax	Item Number / Description	Unit Price	Extended Price
1	1	N	HA-FKT10-P ACEK9 10 INCH Fan Kit for Use with PRM Warehouse: ATLA HA-FKT10-P	276.0000	276.00
1	1	N	HA-FWG ACEK9 HEAVY DUTY FAN GUARD Warehouse: ATLA	108.0000	108.00
1	1	N	H-NKLB-K ACE K-9 "NO K-9 LEFT BEHIND" Warehouse: ATLA	69.0000	69.00
1	1	N	LOFT-21TAH-EC LUND 21+ Tahoe Loft Electronic Equipment Tray Warehouse: ATLA LOFT-21TAH-EC 21+ Tahoe Loft Electronic Equipment Tray - Interior Dimension 16.5" x 40" LOFT-21TAH-EC Includes removable stand-off electronics installation platform, allowing "bench" prep prior to installation. (Optional Accessories Available)	801.0000	801.00

Print Date	03/26/24
Print Time	06:18:52 PM
Page No.	9

Printed By: Jake Porter

Continued on Next Page

Sales Quote

DANA SAFETY SUPPLY, INC
4809 KOGER BLVD
GREENSBORO, NC 27407

Telephone: 800-845-0405

Sales Quote No.	526253-A
Customer No.	ALPHA

Bill To	Ship To
ALPHARETTA, CITY OF EMAIL ALL INVOICES cmiller@alpharetta.ga.us ALPHARETTA, GA 30009	ALPHARETTA, CITY OF **EMAIL ALL INVOICES** psfleet@alpharetta.ga.us Alpharetta, GA 30009
Contact: **Telephone:** 678-297-6317 **E-mail:** psfleet@alpharetta.ga.u	**Contact:** David Freeman **Telephone:** 678-297-6300 **E-mail:** psfleet@alpharetta.ga.us

Quote Date	Ship Via	F.O.B.	Customer PO Number	Payment Method
03/26/24	GROUND SHIPMENT	PPAY & ADD TO INVOICE	K9 TAHOE	NET30

Entered By	Salesperson	Ordered By	Resale Number
Jake Porter	JAKE PORTER-Atlanta	JONATHAN HICKEL	

Order Quantity	Approve Quantity	Tax	Item Number / Description	Unit Price	Extended Price
1	1	N	C14855-COVIN Truck Vault Custom TruckVault for Tahoe 21+ Warehouse: ATLA Custom TruckVault Covington PD Battery Access / Magnum Vault Cargo Tie-Down Trim Vehicle Model/Year:2021+ Tahoe Prisoner Cage will accommodate Drawer Fronts: Black Composite Exterior Carpet Color: Black Drawer Interior Carpet: Grey Drawer Lock(s): Push Button with key override	2,995.0000	2,995.00
1	1	N	425-6162 Delivery Info: 639730 JOTTO, CONSOLE Warehouse: ATLA Faceplates for Console: 425-6295 425-6281 BLANK FILLERS FOR REST OF CONSOLE	298.3100	298.31
1	1	N	425-6568 JD Tahoe PPV 2021+ (28" FLP - Front/Rear Legs) GM/CHEV Warehouse: ATLA 425-6568 Tahoe PPV 2021+ (28" FLP - Front/Rear Legs) GM/CHEVY	218.0000	218.00

Print Date	03/26/24
Print Time	06:18:52 PM
Page No.	10

Printed By: Jake Porter

Continued on Next Page

Sales Quote

DANA SAFETY SUPPLY, INC
4809 KOGER BLVD
GREENSBORO, NC 27407

Telephone: 800-845-0405

Sales Quote No.	526253-A
Customer No.	ALPHA

Bill To	Ship To
ALPHARETTA, CITY OF EMAIL ALL INVOICES cmiller@alpharetta.ga.us ALPHARETTA, GA 30009	ALPHARETTA, CITY OF **EMAIL ALL INVOICES** psfleet@alpharetta.ga.us Alpharetta, GA 30009
Contact: **Telephone:** 678-297-6317 **E-mail:** psfleet@alpharetta.ga.u	**Contact:** David Freeman **Telephone:** 678-297-6300 **E-mail:** psfleet@alpharetta.ga.us

Quote Date	Ship Via	F.O.B.	Customer PO Number	Payment Method
03/26/24	GROUND SHIPMENT	PPAY & ADD TO INVOICE	K9 TAHOE	NET30

Entered By	Salesperson	Ordered By	Resale Number
Jake Porter	JAKE PORTER-Atlanta	JONATHAN HICKEL	

Order Quantity	Approve Quantity	Tax	Item Number / Description	Unit Price	Extended Price
1	1	N	425-3704 Delivery Info: 639730 JOTTO DUAL INTERNAL CUP HOLDER Warehouse: ATLA	59.6600	59.66
1	1	N	425-0017 Delivery Info: 639730 JOTTO PT Hinged Brother Armrest Warehouse: ATLA Designed to mount to either horizontal or vertical, Jotto Desk's new Hinged Brother Armrest is an easy to use flip-up armrest and printer mount all in one. Engineered for the installer, the Brother Hinged Armrest works with Floor Plates or Consoles, the height is adjusted with simple hand tools, and Cable strain relief protects connectors on the printer from damage. Created with the user in mind the armrest position can be adjusted for the user's preference. The Hinged Brother Armrest fits the Brother PocketJet 6/7 Printer and paper roll.	427.8000	427.80
1	1	N	425-0020-5182 JD Laptop mount for Tahoe 21+, GK Plate Warehouse: ATLA	321.2500	321.25
2	2	N	MMSU-1 Delivery Info: ONHAND MAGNETIC MIC SINGLE UNIT CONVERSION KIT Warehouse: ATLA	34.0000	68.00
2	2	N	C-MCB Delivery Info: 642217 HAV CONSOLE MICROPHONE CLIP BRACKET Warehouse: ATLA	18.0000	36.00

Print Date	03/26/24
Print Time	06:18:52 PM
Page No.	11

Printed By: Jake Porter

Continued on Next Page

Sales Quote

DANA SAFETY SUPPLY, INC
4809 KOGER BLVD
GREENSBORO, NC 27407

Telephone: 800-845-0405

Sales Quote No.	526253-A
Customer No.	ALPHA

Bill To	Ship To
ALPHARETTA, CITY OF EMAIL ALL INVOICES cmiller@alpharetta.ga.us ALPHARETTA, GA 30009	ALPHARETTA, CITY OF **EMAIL ALL INVOICES** psfleet@alpharetta.ga.us Alpharetta, GA 30009
Contact: **Telephone:** 678-297-6317 **E-mail:** psfleet@alpharetta.ga.u	**Contact:** David Freeman **Telephone:** 678-297-6300 **E-mail:** psfleet@alpharetta.ga.us

Quote Date	Ship Via	F.O.B.	Customer PO Number	Payment Method
03/26/24	GROUND SHIPMENT	PPAY & ADD TO INVOICE	K9 TAHOE	NET30

Entered By	Salesperson	Ordered By	Resale Number
Jake Porter	JAKE PORTER-Atlanta	JONATHAN HICKEL	

Order Quantity	Approve Quantity	Tax	Item Number / Description	Unit Price	Extended Price
1	1	N	USBC100-5461 Delivery Info: 642218 LIND POWER SUPPLY Warehouse: ATLA	142.0000	142.00
1	1	N	PJ822 Delivery Info: TR-GBKO(2) BRO POCKET JET 8 (THERMAL PRINTER W/ USB Warehouse: ATLA	376.0000	376.00
1	1	N	LB3692 Delivery Info: TR-TAMP(1) BROT 14' DIRECT WIRE 12 VDC POWER CORD Warehouse: ATLA	26.9500	26.95
1	1	N	LBX110001 BRO USB Cable Type A to C, 10 ft Warehouse: ATLA	25.9500	25.95
1	1	N	14.0434 Delivery Info: TR-MARI(4) ABLE2 Multi-Port Accessory Box with USB Warehouse: ATLA	39.0000	39.00
1	1	N	T62213BLK TIGERT 21-22 SPECIAL SERVICE TAHOE Q/IRONBAND BLK Warehouse: ATLA	196.0000	196.00
1	1	N	INSTALL DSS INSTALLATION OF EQUIPMENT - Utility Rocket Warehouse: ATLA	295.0000	295.00

Print Date	03/26/24
Print Time	06:18:52 PM
Page No.	12

Printed By: Jake Porter

Continued on Next Page

Sales Quote

DANA SAFETY SUPPLY, INC
4809 KOGER BLVD
GREENSBORO, NC 27407

Telephone: 800-845-0405

Sales Quote No.	526253-A
Customer No.	ALPHA

Bill To	Ship To
ALPHARETTA, CITY OF EMAIL ALL INVOICES cmiller@alpharetta.ga.us ALPHARETTA, GA 30009	ALPHARETTA, CITY OF **EMAIL ALL INVOICES** psfleet@alpharetta.ga.us Alpharetta, GA 30009
Contact: **Telephone:** 678-297-6317 **E-mail:** psfleet@alpharetta.ga.u	**Contact:** David Freeman **Telephone:** 678-297-6300 **E-mail:** psfleet@alpharetta.ga.us

Quote Date	Ship Via	F.O.B.	Customer PO Number	Payment Method
03/26/24	GROUND SHIPMENT	PPAY & ADD TO INVOICE	K9 TAHOE	NET30

Entered By	Salesperson	Ordered By	Resale Number
Jake Porter	JAKE PORTER-Atlanta	JONATHAN HICKEL	

Order Quantity	Approve Quantity	Tax	Item Number / Description	Unit Price	Extended Price
1	1	N	INSTALL DSS INSTALLATION OF EQUIPMENT - Motorola Radio Warehouse: ATLA	195.0000	195.00
1	1	N	MISC Custom Wiring Harness Relay Box Warehouse: ATLA	850.0000	850.00
1	1	N	FREIGHT INCOMING FREIGHT Warehouse: ATLA	850.0000	850.00
1	1	N	SHOP SHOP SUPPLIES - WIRE/CONNECTORS/RELAYS/INSTALL KI Warehouse: ATLA	325.0000	325.00
1	1	N	INSTALL DSS INSTALLATION OF EQUIPMENT Warehouse: ATLA	3,495.0000	3,495.00
2	2	N	SBT201 Delivery Info: 642219 BLUELINE SEATBELT LOCK- TOP BUTTON Warehouse: ATLA	56.0000	112.00
4	4	N	SB-KEY Delivery Info: 642219 BLUELINE - SEATBELT LOCK - KEY Warehouse: ATLA	2.5000	10.00

Print Date	03/26/24
Print Time	06:18:52 PM
Page No.	13

Printed By: Jake Porter

Continued on Next Page

Sales Quote

DANA SAFETY SUPPLY, INC
4809 KOGER BLVD
GREENSBORO, NC 27407

Telephone: 800-845-0405

Sales Quote No.	526253-A
Customer No.	ALPHA

Bill To	Ship To
ALPHARETTA, CITY OF EMAIL ALL INVOICES cmiller@alpharetta.ga.us ALPHARETTA, GA 30009	ALPHARETTA, CITY OF **EMAIL ALL INVOICES** psfleet@alpharetta.ga.us Alpharetta, GA 30009
Contact: **Telephone:** 678-297-6317 **E-mail:** psfleet@alpharetta.ga.u	**Contact:** David Freeman **Telephone:** 678-297-6300 **E-mail:** psfleet@alpharetta.ga.us

Quote Date	Ship Via	F.O.B.	Customer PO Number	Payment Method
03/26/24	GROUND SHIPMENT	PPAY & ADD TO INVOICE	K9 TAHOE	NET30

Entered By	Salesperson	Ordered By	Resale Number
Jake Porter	JAKE PORTER-Atlanta	JONATHAN HICKEL	

Order Quantity	Approve Quantity	Tax	Item Number / Description	Unit Price	Extended Price
1	1	N	HINVI-2-6 Delivery Info: TR/ROCK HINVI - Non Visible Personal Safety Lighthead Warehouse: ATLA HINVI - Non Visible, Personal Safety Lighthead, 9-32v Surface mount	208.0000	208.00
1	1	N	NONSTOCK Mounting bracket for UV light Warehouse: ATLA	15.0000	15.00
1	1	N	7160-0250-01 GJ NOTEPAD V COMPUTER CRADLE W/ TALL BRACKETS Warehouse: ATLA DESIGNED FOR THE EXTRA THICKNESS REQUIRED BY RUGGEDIZED LAPTOPS --- **********	259.0000	259.00
1	1	N	SC-934-5-A-K9 SC K-9 OR FLAT CAGE GUN RACK Warehouse: ATLA Mounted over kennel	318.0000	318.00

Approved By: _____

☐ **Approve All Items & Quantities**

Quote Good for 30 Days

Print Date	03/26/24
Print Time	06:18:52 PM
Page No.	14

Printed By: Jake Porter

Subtotal	29,651.73
Freight	0.00
Order Total	29,651.73

STAFF REPORT

Department: Information Technology
Submitted By: Adam Montgomery
Meeting Date: April 15, 2024

AGENDA ITEM:

Purchase Approval: Replacement of Uninterrupted Power Supply (UPS)
Consideration of approval of the purchase of an Uninterrupted Power Supply replacement from Southern Computer Warehouse under the State of Georgia technology contract (#99999-SPD0000172-14) in the amount of $64,827.17 and with authorization for the Mayor to execute all necessary documents.

STAFF RECOMMENDATION:

Approve the request to purchase a replacement of the uninterrupted power supply in the amount of $64,827.17 and authorize the Mayor to execute all necessary documents.

BUDGET & PROCUREMENT:

BUDGETED ITEM: YES

FISCAL IMPACT: NO

INCLUDED IN CURRENT FY CPTL BUDGET: NO

INCLUDED IN CURRENT FY OPRT. BUDGET: YES

TOTAL PROJECT COST:

APPROPRIATIONS:

ACCOUNT TITLE/NUMBER	DOLLAR AMOUNT
10017350-523900	$64,827.17

EXTERNAL FUNDING SOURCES:

ACCOUNT TITLE/NUMBER	DOLLAR AMOUNT
10017350-523900	$64,827.17

ITEM DESCRIPTION:

Background Information

An Uninterrupted Power Supply, or UPS, is part of the power system for the City's data center. The UPS system is designed to provide power for critical loads, which include IT equipment and other essential infrastructure. The UPS system serves as a bridge between the utility power and the backup generator, which provides long-term power backup. The UPS system is responsible for providing uninterrupted power to the critical loads until the backup generator comes online to support the critical load.

The current UPS was installed in 2011 and has served the City well, but it has reached the end of its lifecycle. The manufacturer no longer supports the unit, and Schneider will no longer warranty or service it after August 2024. This request will replace that unit with a new UPS that will be more efficient and provide better battery performance.

In summary, a UPS system is an essential component of any data center, providing reliable backup power to critical IT equipment and infrastructure in the event of a power outage or other power-related issues. This functionality is crucial to our business continuity plan during a power event and needs to be replaced.

Budgeting

This request for $64,827.17 is within the fiscal year 2024 budget. The quoted amount is $63,827.17, and $1,000.00 in estimated shipping.

Procurement

The Uninterrupted Power Supply will be procured through Southern Computer Warehouse (SCW) using State of Georgia technology contract 99999-SPD0000172-014. SCW and Schneider have been managing and servicing the current UPS, and we would like to keep this relationship. This provides consistency in management, operations, and maintenance. A copy of the state contract is attached.

ALTERNATIVES:

Do not approve the procurement of the replacement uninterrupted power supply in fiscal year 2024, however, the current UPS will no longer be within warranty and maintenance in August 2024 and will be more prone to failing.

ATTACHMENTS:

1. SCW Quote for UPS Unit
2. SCW SPD0000172-014

Southern Computer Warehouse
1395 S. Marietta Parkway
Building 300
Marietta, Georgia 30067
United States
http://www.scw.com
(P) 877-GOTOSCW
(F) 770.579.8937

Quote (Open)

Date
Apr 09, 2024 08:35 AM EDT

Modified Date
Apr 09, 2024 08:44 AM EDT

Quote #
1820848 - rev 1 of 1

Description
Galaxy VS UPS, OEM Service Renewal

SalesRep
Shrader, Jamison
(P) 770-579-8927
(F) 770-579-8937

Customer Contact
Lefebvre, Nathan
(P) 678-297-6032
nlefebvre@alpharetta.ga.us

Customer
City of Alpharetta GA (CA4467)
Lefebvre, Nathan
Accounts Payable
2 S. Main St.
Alpharetta, GA 30004
United States
(P) 678-297-6037

Bill To
City of Alpharetta GA
Accounts, Payable
2 Park Plaza
Alpharetta, GA 30009
United States

Ship To
City of Alpharetta GA
REF, PO
2 Park Plaza
Nathan Lefebvre
Alpharetta, GA 30009
United States
(P) 678-297-6032
nlefebvre@alpharetta.ga.us

Customer PO:	**Terms:** Undefined	**Ship Via:** GROUND
Special Instructions:		**Carrier Account #:**

#	Description	Part #	Qty	Unit Price	Total
1	APC - OEM Advantage Ultra Service Plan (performed by the OEM) for three phase UPS units includes 7x24 tech support, annual 5x8 PM Visit, Next Business Day (NBD) 5x8 response; OEM supplied parts and labor for repairs also included per the attached SOW Note: For Equipment: MGE Galaxy 4000 50kVA UPS: P09-10018 Batt Cab: J09-10113 Begin Date: 8/13/2024 End Date: 8/12/2025 **Contract** GA DOAS SPD0000172-014 - Integrated Security & Surveillance Prod/Services	453851120GE-9	1	$4,385.30	$4,385.30
2	APC - Response Time Upgrade from NBD to 4HR 7X24 with 5x8 PMV scheduling Note: For Equipment: MGE Galaxy 4000 50kVA UPS: P09-10018 Batt Cab: J09-10113 Begin Date: 8/13/2024 End Date: 8/12/2025 **Contract** GA DOAS SPD0000172-014 - Integrated Security & Surveillance Prod/Services	453851120GE-10	1	$743.45	$743.45
3	APC - OEM Battery Maintenance Visit normal hours (5x8); qty 2 per battery required for semi-annual visits Note: Begin Date: 8/13/2024 End Date: 8/12/2025 **Contract** GA DOAS SPD0000172-014 - Integrated Security & Surveillance Prod/Services	453851120GE-12	40	$19.39	$775.60
4	APC - Schneider Electric Galaxy VS UPS Solution Note: Description:	CCI.040224-1	1	$57,922.82	$57,922.82

Schneider Electric Galaxy VS UPS for External Batteries

Power Rating: ..... 50 kVA/kW
System Input: ..... 208 Volts, 3-Phase (3W+G or 4W+G)
System Output: ..... 208 Volts, 3-Phase (Same as Input)
UPS Dimensions: ..... ~ 21"W x 59"H x 34"D; ~ 551 lbs.

Galaxy VS Wallmount Maintenance Bypass Panel

Bypass Dimensions: ..... ~ 33"W x 39"H x 11"D; ~ 185 lbs.

Galaxy VS Classic VRLA Battery Backup

Battery Cabinet Dimensions: ..... ~ 28"W x 59"H x 33"D, ~ 1,457 lbs.
System Runtime: ..... ~ 9 mins at Full Load

5x8 Start-Up and Assembly Service

Contract
GA DOAS SPD0000172-014 - Integrated Security & Surveillance Prod/Services

NOTE: Shipping is not included. For a shipping quote, please verify ship to address and let us know if we can deliver with 53' trailer to your standard height dock (no inside delivery past dock) prior to the scheduled install date.

NOTE: End of service life is DEC 2028; OEM recommends batteries and power supply board now and DC Caps in 2025; shipping is not included, for a shipping quote, please verify we can deliver with 53' trailer to standard height dock (no inside delivery past dock) prior to the scheduled install date.

Subtotal:	**$63,827.17**
Tax (.0000%):	$0.00
Shipping:	$0.00
Total:	**$63,827.17**

Quote valid for 30 days unless formal bid provides different term. Promotional pricing is valid only during term of promotion and while supplies last. All returns must be authorized and clearly marked with a valid RMA number. RMA's are subject to restock fees when applicable.

These prices may not include applicable taxes, insurance, shipping, delivery, setup fees, or any cables or cabling services or material unless specifically listed above. Please note that expedited shipping charges are estimated, and could decrease or increase when invoiced. All prices are subject to change without notice. Supply subject to availability.

State of Georgia

Statewide Standard Contract Form

Solicitation Title	Solicitation Number	Contract Number
Integrated Security and Surveillance Products and Services	**99999-SPD0000172**	**99999-SPD0000172-014**

1. This Contract is entered into between the Agency and the Contractor named below:

Agency's Name
Department of Administrative Services
(hereafter called Agency)

Contractor's Name
Southern Computer Warehouse, Inc. (hereafter called Contractor)

2. Contract to Begin: May 1, 2021 | Date of Completion: April 30, 2023 | Renewals: **Five (5)**

3. Performance Bond, if any: | Other Bonds, if any:

4. Authorized Person to Receive Contract Notices for Agency: | Authorized Person to Receive Contract Notices for Contractor:

5. The parties agree to comply with the terms and conditions of the following attachments which are by this reference made a part of the Statewide Contract:

Attachment 1: **Statewide Contract for Goods and Ancillary Services**
Attachment 2: **Solicitation (referenced above)**
Attachment 3: **Contractor's Final Response**
Attachment 4: **Cost Proposal**

IN WITNESS WHEREOF, this Contract has been executed by the parties hereto.

6.

Contractor

Contractor's Name *(If other than an individual, state whether a corporation, partnership, etc.)*
Southern Computer Warehouse, Inc.

By *(Authorized Signature)* | Date Signed 12/8/2020

Printed Name and Title of Person Signing
Starr Brown, President

Address
1395 Marietta Parkway
Building 300 Suite 106
Marietta, GA 30067

7.

Agency

Agency Name
Department of Administrative Services

By *(Authorized Signature)* Lisa Eason | Date Signed 4/7/2021

Printed Name and Title of Person Signing
Lisa Eason, Deputy Commissioner State Purchasing Division, Department Administrative Services

Address
200 Piedmont Ave. S.E. West Tower, Suite 1804, Atlanta, GA, 30334

STAFF REPORT

Department: Finance
Submitted By: Tom Harris
Meeting Date: April 15, 2024

AGENDA ITEM:

2024-2025 Citywide Group Medical, Dental, Vision, Disability, and Life Insurance Coverages
Consideration of approval of the award for Plan Year 2024-2025 the City's group Medical and Dental coverage to Cigna; Vision coverage to Eye Med, and Life and Disability coverage to New York Life and with authorization for the Mayor to execute all necessary documents.

STAFF RECOMMENDATION:

Approve the award for Plan Year 2024-2025 of the City's group Medical and Dental coverage to Cigna, vision coverage to Eye Med, Life and Disability coverage to New York Life, and authorize the Mayor to execute any necessary documents.

BUDGET & PROCUREMENT:

BUDGETED ITEM: YES

FISCAL IMPACT: YES

INCLUDED IN CURRENT FY CPTL BUDGET: NO

INCLUDED IN CURRENT FY OPRT. BUDGET: NO

TOTAL PROJECT COST:

APPROPRIATIONS:

ACCOUNT TITLE/NUMBER	DOLLAR AMOUNT
Group Insurance (Budgeted across all departments based on staffing)	$10,736,448

EXTERNAL FUNDING SOURCES:

ACCOUNT TITLE/NUMBER	DOLLAR AMOUNT
	$0.00

ITEM DESCRIPTION:

Staff recommends to award the City's group Medical and Dental coverage to Cigna; Vision coverage to Eye Med; and Life and Disability coverage to New York Life.

Background

The City's Broker of record, Alliant Insurance Services (8th largest global brokerage firm), solicited proposals from the market (Anthem, UHC, Aetna) for our medical and other related coverage. After months of negotiations, our current carrier, Cigna, is the recommended provider for both Medical (4.9% in rates) and Dental (0%) for plan year 2023/2024. After credits of $200k that Cigna will apply directly against claims next year, the effective increase in premiums will be approximately 2.4%. This is an exceptional renewal given that the current year's loss ratio is at 110%, meaning claims paid by Cigna are exceeding premiums paid to Cigna by 10% and based on trends of 7% an increase in the range of 17% or more could be expected. Cigna's final proposal is indicative of their commitment to continue to serve the City of Alpharetta. It should be noted that the City's 4-year average increase has been 2.5% compared to the trend of 7% for the same period.

Our medical coverage with Cigna is a Fully Insured Plan designed as a Minium Premium/Shared Return Plan. With the plan, the City receives the protection of a fully insured plan, but if the medical claims come in less than the estimate, the City saves the difference. No other carrier offers this savings potential under a fully insured plan. Change in plan design: changing carriers and processes for both the employee and employer;

potential for spikes and in subsequent renewal period (Cigna offered the best year-2 rate cap); and ability to achieve savings under the Cigna plan are other factors for consideration.

Eye-Med is the recommended carrier for vision care. They proposed a 0% increase.

NY Life proposed a 0% increase in their Basic Life /AD&D; Short Term Disability; and Long Term Disability coverages.

ALTERNATIVES:

Although not recommended, the City Council could direct us to go with different carriers.

ATTACHMENTS:

1. City of Alpharetta 2024-2025 Executive Summary

Executive Summary

		Current		Renewal		
Coverage	Contribution	Carrier	Annual Cost	Annual Cost	$	%
Medical	ER and EE Paid	Cigna	8,140,101	8,539,239	399,137	4.9%
HRA Fund Money	ER Paid	Cigna	37,250	37,250	0	0.0%
HSA Fund Money	ER Paid	City	572,250	572,250	0	0.0%
Dental	ER and EE Paid	Cigna	475,104	475,104	0	0.0%
Vision	ER and EE Paid	EyeMed	52,991	52,991	0	0.0%
Basic Life/AD&D	ER Paid	NY Life	209,336	209,336	0	0.0%
Voluntary Life/AD&D	EE Paid	NY Life	138,428	138,428	0	0.0%
Short Term Disability	ER Paid	NY Life	172,670	172,670	0	0.0%
Long Term Disability	ER Paid	NY Life	51,456	51,456	0	0.0%
Annual Total		9,849,586		10,248,724		
Change from Current ($ / %)		-			399,137	4.1%
Employer Total Contribution		9,050,355	91.9%		9,420,720	91.9%
Employee Total Contribution		799,232	8.1%		828,003	8.1%

STAFF REPORT

Department: Recreation, Parks & Cultural Services
Submitted By: Christine Young
Meeting Date: April 15, 2024

AGENDA ITEM:

Memorandum of Understanding: Lionheart WORKS and Crabapple Government Center Facility Usage
Consideration of approval of the Memorandum of Understanding between Lionheart LifeCenter and the City of Alpharetta for Lionheart WORKS to continue to rent space within the Crabapple Government Center and with authorization for the Mayor to execute all necessary documents.

STAFF RECOMMENDATION:

Approve a Memorandum of Understanding between Lionheart LifeCenter and the City of Alpharetta for Lionheart WORKS to continue to rent space within the Crabapple Government Center and authorize the Mayor to execute all necessary documents.

BUDGET & PROCUREMENT:

BUDGETED ITEM: NO

FISCAL IMPACT: YES

INCLUDED IN CURRENT FY CPTL BUDGET: NO

INCLUDED IN CURRENT FY OPRT. BUDGET: NO

TOTAL PROJECT COST: LIONHEART WORKS RENT FOR THE OFFICE WING OF CRABAPPLE CENTER: $1,200 ANNUALLY.

APPROPRIATIONS:

ACCOUNT TITLE/NUMBER	DOLLAR AMOUNT

EXTERNAL FUNDING SOURCES:

ACCOUNT TITLE/NUMBER	DOLLAR AMOUNT

ITEM DESCRIPTION:

BACKGROUND:
Lionheart WORKS is an Alpharetta-based non-profit human service organization founded in 2000, and is a vocational training program that provides special needs individuals 18 years and older with real work experiences while teaching basic employment skills. Since 2000, the program has grown quickly. In 2020, the City of Alpharetta was able to rent space for the Lionheart WORKS program to operate out of the Crabapple Center. With this expansion, Lionheart WORKS has been able to greatly increase the number of participants and the number of work sites. There have been not issues related to Lionheart WORKS utilizing the space at the Crabapple Government Center.

Lionheart WORKS pays $100 per month to the City of Alpharetta for their utilization.

RECOMMENDATION EXPLANATION:
This request is simply a renewal of the Memorandum of Understanding (MOU) under the same conditions as in previous years. Staff recommends approval of the MOU renewal for 2024-2025. If the Mayor and Council approve the MOU as presented, the staff will proceed with issuing the document for signatures.

ALTERNATIVES:

Do not approve the Memorandum of Understanding renewal and prohibit Lionheart WORKS from renting space at Crabapple Government Center.

ATTACHMENTS:

1. COA-Lionheart Works Crabapple Government Center MOU (2024-2025)

MEMORANDUM OF UNDERSTANDING

This Memorandum of Understanding ("MOU") is made and effective this 15th, day of April, 2024 (the "Effective Date"), by and between **The Lionheart LifeCenter, Inc., dba Lionheart WORKS**, a Georgia corporation located at **225 Roswell Street, Alpharetta, Georgia 30009** ("LHW") and the **City of Alpharetta**, a Georgia municipal corporation, located at **2 Park Plaza, Alpharetta, Georgia 30009** ("CoA"). LHW and CoA are sometimes referred to in this MOU individually as a "Party" or collectively as the "Parties."

WHEREAS, CoA provides and conducts a variety of recreation and cultural activities that employ the leisure time of citizens of CoA is a wholesome and constructive manner, and;

WHEREAS, LHW is a non-profit human service organization founded in 2000; and is a vocational training program that provides individuals 18 and older with real work experiences while teaching basic employment skills, and;

WHEREAS, the LHW program is designed to teach independence and communication while matching individual strengths with vocational settings that are selected based on individuals affinities, abilities, and work readiness, and;

WHEREAS, LHW provides vocational instruction, social thinking, occupational therapeutic consultation and self-advocacy skill building, as related to the work environment, occurring in the training center and at specific work sites, and;

WHEREAS, LHW has been housed at the Lionheart School, 225 Roswell Street, Alpharetta, Georgia, since 2010 to operate their Lionheart WORKS program.

NOW, THEREFORE, for and in consideration of the premises above and the promises below, the Parties mutually covenant and agree as follows:

1. FACILITY USE.
   a) The hours of LHW operation are Monday through Friday, 8:00am to 6:00pm at the Crabapple Government Center ("Center"), owned by CoA and located at 12624 Broadwell Street.
   b) At the Center, CoA shall provide the reception office area and storage within that space, where materials may be secured at the end of each day.
   c) LHW will have use of the Center's office wing kitchen area, conference room, bathrooms, copy room and all offices excluding the last office on the left side at the south end of the hall, to continue to be used as City storage.
   d) The Center's storage room at the south end of the hall on the right may be used; all utility panels must be left clear and accessible.

e) LHW will be closed on weekends, LHW holidays, and any additional holidays or inclement weather days observed by CoA.

f) CoA staff may enter the facility at any time, for purposes of facility inspections, repairs or to access storage room(s).

2. RENTAL FEE. The agreed upon rental fee will be $100 per month, payable to CoA on the first day of the month and all succeeding months.

3. EXPENSES.

a) LHW will provide and pay for their own voice and data connections, including maintenance to such items.

b) LHW will be responsible for labor and cost of any renovations. All plans to alter the current state of said rental area must be submitted and approved by CoA prior to renovations.

c) CoA agrees to pay for utilities, maintenance, and trash pick-up.

d) CoA shall not be financially responsible for LHW operations and equipment (unless owned by CoA) or damages to the property caused by LHW.

4. MAINTENANCE. LHW will report any and all maintenance and safety concerns to CoA in a timely manner.

5. ACCIDENTS/INCIDENTS. LHW is responsible to immediately notify CoA of any accident or incident that occurs during the program. CoA will complete accident/incident form with assistance and/or input from LHW as deemed appropriate.

6. LIABILITY. It is agreed and understood that LHW releases CoA, its agents, and employees from any and all damage or injury to participants or property arising out of performance of this MOU and that LHW shall relieve CoA of all damages, liabilities, expenses and losses incurred by CoA as a result of LHW's performance of this MOU.

7. TERM AND TERMINATION. This MOU shall commence on the date of execution and shall remain in effect until June 30, 2025. This MOU may be terminated by either party without cause provided that six (6) months-notice is given. CoA has the option to renew this MOU if both parties agree to the terms of such renewal, or if both parties can negotiate new terms that are acceptable to both parties. This MOU may be immediately terminated by CoA without prior notice if LHW engages in activities and/or conduct unbecoming to CoA.

8. MISCELLANOUS.

8.1. It is agreed between CoA and LHW that this MOU shall be executed in an original and one copy, which may be used for any purpose for which the original may be used.

8.2. CoA has designated the Director or his/her designee as its contact person, coordinator, and liaison person with LHW in the execution of the terms of this MOU.

IN WITNESS WHEROF, the Parties support the goals and objectives of this Memorandum and have hereunto executed this Memorandum of Understanding on the day and year first above written.

THE LIONHEART LIFE CENTER, INC.
DBA LIONHEART WORKS

By: _____
Tracy Burke, Director of Operations

DATE: _____

CITY OF ALPHARETTA, GEORGIA

By: _____
Jim Gilvin, Mayor

DATE: _____

APPROVED AS TO CONTENT:

By: _____
Chris Lagerbloom, City Administrator

APPROVED AS TO FORM:

By: _____
Jennifer McCall, City Attorney

STAFF REPORT

Department: Recreation, Parks & Cultural Services
Submitted By: Christine Young
Meeting Date: April 15, 2024

AGENDA ITEM:

Premises Usage Agreement: Alpharetta First Methodist Church for 2024 Taste of Alpharetta Parking
Consideration of approval of a Premises Usage Agreement between the City of Alpharetta and Alpharetta First Methodist Church, Inc., permitting the use of the Cumming Street Parking Lot for the 2024 Taste of Alpharetta and with authorization for the Mayor to execute all necessary documents.

STAFF RECOMMENDATION:

Approve a Premises Usage Agreement between the City of Alpharetta and Alpharetta First Methodist Church, Inc., permitting the use of the Cumming Street Parking Lot for the 2024 Taste of Alpharetta and authorize the Mayor to execute all necessary documents.

BUDGET & PROCUREMENT:

BUDGETED ITEM: NO

FISCAL IMPACT: NO

INCLUDED IN CURRENT FY CPTL BUDGET: NO

INCLUDED IN CURRENT FY OPRT. BUDGET: NO

TOTAL PROJECT COST: N/A

APPROPRIATIONS:

ACCOUNT TITLE/NUMBER	DOLLAR AMOUNT

EXTERNAL FUNDING SOURCES:

ACCOUNT TITLE/NUMBER	DOLLAR AMOUNT

ITEM DESCRIPTION:

BACKGROUND:
As in years past, the City of Alpharetta is requesting a usage agreement for the Alpharetta First Methodist Church parking lot for the annual Taste of Alpharetta event on May 9th, 2024, from 8:00am-11:59pm. Due to the attendance of this event, additional parking, beyond existing public parking, is required to accommodate the attendees of the event.

There is no charge for the City to utilize this parking lot, unless additional clean up of the property is required, which will be billed at $30.00 per hour.

RECOMMENDATION EXPLANATION:
Staff recommends approval of the premises usage agreement. If the Mayor and Council approve the agreement presented, Staff will proceed with issuing the document for signatures.

ALTERNATIVES:

Deny approval of the the premises usage agreement and forego the opportunity for additional parking at Alpharetta First Methodist Church.

ATTACHMENTS:

1. Taste of Alpharetta 2024 AFMC Premises Usage Agreement

PREMISES USAGE AGREEMENT

This Premises Usage Agreement ("Agreement") is entered into this ____ day of March 2024 by and between Alpharetta First Methodist Church, Inc. ("AM") and City of Alpharetta ("Grantee").

Scope of Permitted Use

Subject to the terms and conditions set forth below, AM hereby grants Grantee a revocable right to use the AM Premises which only includes the Cumming Street Parking Lot located at 69 North Main Street, Alpharetta, Georgia for the purpose of parking vehicles belonging to the vendors of Taste of Alpharetta ("Permitted Use"). Grantee's use of the Premises shall at all times be subject to the Rules and Regulations attached hereto and incorporated herein as Exhibit A.

Term of Agreement

Grantee shall be permitted to use the Cumming Street Lot on Thursday, May 9, 2024, commencing at 8 a.m. and ending at 11:59 p.m. Grantee agrees to clean the parking lot at the conclusion of the event so that it is returned to the same condition as when given usage.

Grantee acknowledges that AM uses the Premises at various dates and times for religious services, weddings, funerals, youth, administrative activities and related reasons, and AM may preempt Grantee's use of the Premises at any time and for any reason upon notice to Grantee.

Either party shall have the right to terminate this Agreement and revoke the right of use at any time, for any reason, or for no reason, and termination of the Agreement shall be effective upon on party providing notice of termination to the other.

Usage Fee and Deposit

Grantee shall pay AM a usage fee $0 prior to its use of the Premises ("Fee"). If Grantee is prevented from using the Premises in accordance with this Agreement, AM will refund any paid and unused Fee.

Grantee shall pay AM a separate Security Deposit in the amount of $0 upon executing this Agreement which will be applied toward any damage caused by Grantee's use of the Premises and any unapplied Security Deposit shall be refunded to Grantee.

Insurance

Grantee shall provide and keep in force during the term of this Agreement, for the benefit of AM or any other persons or entities designated by AM, comprehensive general liability insurance provided by a company selected by Grantee and satisfactory to AM, for property damage and bodily injury, personal injury or death to one (1) or more persons, which insurance shall insure the interests of AM and Grantee and any designees of AM. Grantee shall deliver certificates of such insurance to AM before using the Premises, and in any event, within 30 days after the signing of this Agreement. All such policies shall include a provision that AM shall receive at least thirty (30) days advance notice prior to material changes or cancellation thereof.

Delivery of Premises and Alterations

Grantee agrees to use of the Premises in "as is" condition without any obligation of AM to make any repairs, alterations, or modifications to the Premises. Grantee shall not make any alterations or modifications to the Premises unless approved in advance in writing by AM.

Maintenance of Premises

Grantee shall at all times keep and maintain the Premises and the furniture and equipment therein, neat, clean, free of debris and trash, and in good order and repair and in an attractive and clean condition and in accordance with the Rules and Regulations attached hereto and incorporated herein as Exhibit A. Grantee shall be liable to AM for damage to AM property resulting from Grantee's use of the Premises. If additional clean up is required by the Maintenance staff a fee of $30 per hour will be deducted from the security deposit.

Assignment

Grantee shall not assign this Agreement, nor permit use of the Premises by anyone other than Grantee.

Indemnification

Grantee shall use the Premises at Grantee's sole risk. Grantee shall keep the Premises free of all liens and claims of lien that may arise from any act or omission on the part of Grantee. Except for damages caused by AM's negligence, Grantee shall indemnify, defend and hold harmless AM, and AM's contractors, employees, agents and invitees, from all claims, damages, or liabilities for injury to persons or property, including, without limitation, reasonable attorney's fees which may arise out of Grantee's use of the Premises. Grantee shall and does hereby release AM from and against all claims of any nature arising out of or related to Grantee's use of the Premises. This paragraph shall survive termination of this Agreement.

Entire Agreement

This Agreement contains the entire agreement between the parties, and all prior understandings and agreements between the parties are merged into this Agreement. This Agreement may be changed or modified only by a writing executed by the party against whom enforcement thereof is sought.

Limited Right of Use

This Agreement grants a limited and specified personal right of use only. No other interest is granted or conveyed by this Agreement. This Agreement, and any act or omission by either party under this Agreement or in reliance upon this Agreement, does and shall not create or convey a partnership, joint venture, lease, easement, estate or property interest between the parties. By entering into this Agreement and permitting your use of the Premise, AM does not in any way endorse Grantee's organization. By entering into this Agreement and permitting your use of the Premise, AM does not grant Grantee permission to advertise your use of the Premises (or any related event) at AM church services, in church publications, in the church bulletin, on the church website, or on the AM signs.

Governing Law

This Agreement shall be governed by and construed in accordance with the laws of Georgia.

Time is of the Essence

Time is of the essence of this Agreement.

ALPHARETTA FIRST METHODIST CHURCH, INC. ("AM")

By:_____

Title:_____

Date:_____

CITY OF ALPHARETTA, GEORGIA ("GRANTEE")

By:_____
Jim Gilvin, Mayor

Date:_____

APPROVED AS TO SUBSTANCE:

By:_____
Chris Lagerbloom, City Administrator

APPROVED AS TO FORM:
JARRARD & DAVIS, LLP

By:_____
City Attorney

EXHIBIT A: RULES AND REGULATIONS

As a condition of this Agreement, Grantee shall prevent the following list of prohibited activities or uses of the Premises:

1. Use of the Premises for any illegal purpose.
2. Use which creates fire, explosive or environmental hazards.
3. Use which generates, stores, treats, disposes of, installs or otherwise causes or permits any Hazardous Substances to be brought upon or kept or used in or on the Premises.
4. Use which creates or permits a nuisance or trespass.
5. Use which produces, reproduces, or transmits any sounds or vibrations which may be heard, seen or experienced, or are audible or detectable, outside the Premises.
6. Use which produces, emanates, or transmits odors, fumes, dust or vapors which are detectable outside the Premises, or which are strong, unusual, offensive or otherwise objectionable.
7. Use or occupancy by any person under the age of 18 without adequate adult supervision.
8. Smoking in any building on the Premises.
9. Consumption of alcoholic beverages or controlled substances anywhere on the Premises.
10. Food or drink in the sanctuary or narthex (front entrance of sanctuary).
11. Moving or relocating any AM religious symbols, paintings, wall hangings, portraits, etc. from their existing location.
12. Use which, in the reasonable judgment of AM, impairs or adversely affects the character, reputation or appearance of the church or Premises.

As a condition of this Agreement, Grantee shall adhere to the following requirements for use of the Premises:

1. If any furniture or equipment of AM is moved or repositioned as a result of use by Grantee, then Grantee shall return all furniture and equipment back to its original location and position before it was moved.
2. Grantee shall reset the heat or air according to posted directions, turn off lights, and close the door when leaving a classroom.
3. Grantee shall leave rooms clean and ready for the next group.
4. Grantee is responsible for any damages to AM property.
5. In case of an emergency, call “911” and request assistance. Dial 9 for an outside line.
6. The undersigned shall immediately report any problems with AM equipment or facilities to the custodian if there is one on site and/or to the Maintenance Department at 678.867.7522.

GRANTEE:

By:_____

Title:_____

Date:_____

Please sign and return copy and Security Deposit to:
Alpharetta Methodist Church
C/O Laura Malek
Database and Scheduling Coordinator
69 N. Main Street
Alpharetta, GA 30004

STAFF REPORT

Department: Recreation, Parks & Cultural Services
Submitted By: Kim Manning
Meeting Date: April 15, 2024

AGENDA ITEM:

Memorandum of Understanding: City of Alpharetta and North Point Mall - The Spotlight Community Stage
Consideration of approval of the Memorandum of Understanding between REEP-RTL NPM GA LLC (dba North Point Mall) and the City of Alpharetta for use of a vacant space within North Point Mall for the purpose of an indoor community stage and to authorize the mayor to execute all necessary documentation.

STAFF RECOMMENDATION:

Approve the Memorandum of Understanding between REEP-RTL NPM GA LLC dba North Point Mall and the City of Alpharetta for use of a vacant space within North Point Mall for the purpose of an indoor community stage and to authorize the mayor to execute all necessary documentation.

BUDGET & PROCUREMENT:

BUDGETED ITEM: YES

FISCAL IMPACT: YES

INCLUDED IN CURRENT FY CPTL BUDGET: NO

INCLUDED IN CURRENT FY OPRT. BUDGET: YES

TOTAL PROJECT COST: PHASE I / FY 2023 - THE DEPARTMENT HAS USED OPERATING FUNDS TO PURCHASE MODULAR ITEMS THAT CAN BE USED IN ANOTHER LOCATION IF NECESSARY.
PHASE II / FY 2024 - IF THE MOU IS APPROVED, STAFF WILL SPEND AN ESTIMATED $51,000 IN EXISTING OPERATING FUNDS ON REFURBISHING THE SPACE. THESE COSTS WILL BE COVERED BY A COMPILATION OF EXISTING OPERATING FUNDS AND PARTIAL USAGE OF THE FUNDS AND ARE THEREFORE CURRENTLY INCLUDED IN THE FY24 OPERATING BUDGET.
PHASE III / FY 2025 - THE DEPARTMENT HAS REQUESTED AN FY2025 INITIATIVE FOR OPERATING THE COMMUNITY STAGE. THE ANTICIPATED MONTHLY COST OF UTILITIES AND TRASH SERVICE RANGES FROM $2,500 TO START (BASED UPON ONE SHOW PER MONTH) TO $3,500 (WHEN THE THEATER IS FULLY OPERATIONAL AND HAS THREE SHOWS PER MONTH). THAT SAID, THE AVERAGE OPERATIONAL COST FOR 12 MONTHS IS $34,500 YEARLY. PART-TIME PERSONNEL/SEASONAL/TEMPORARY SALARIES ARE ESTIMATED AT $45,200 YEARLY. TOTAL OPERATIONAL & PERSONAL $79,700. THE ESTIMATED REVENUE FOR THE FIRST YEAR IS $15,000 WITH STAFF BOOKING THE COMMUNITY STAGE. THE INCREASE IN REVENUE IS EXPECTED TO BE A MINIMUM OF $50,000 BY FY2029.

APPROPRIATIONS:

ACCOUNT TITLE/NUMBER	DOLLAR AMOUNT

Cultural Services - Facility Repair & Maintenance | 10061350 52250 / RCA12	$26,000
Cultural Services - Prof Services | 10061350 521200 / RCA12	$25,000.00

EXTERNAL FUNDING SOURCES:

ACCOUNT TITLE/NUMBER	DOLLAR AMOUNT
N/A	$0.00
N/A	$0.00

ITEM DESCRIPTION:

BACKGROUND:
The City of Alpharetta has a real need for a performance space that can seat up to 150 attendees. The Recreation, Parks & Cultural Services Department has been preparing and looking for an indoor location to set up a flexible performance space for cultural events. The City approached North Point Mall about the possibility of utilizing existing, empty retail space. The leadership of the Mall was excited about the possibility. They felt that it would be an ideal usage of the space for a Community Theater with a seating capacity of up to 150 attendees. Alpharetta does not currently have a similar indoor space for cultural events.

THE THEATER:
Usage of the stage would include but not be limited to City Programs (i.e.- Improv Classes or Movie Star Camp), Art Leader Groups (i.e.- ACT 1 Theater Performances or Alpharetta Symphony Orchestra- Quartet) and Third-Party Applications (Cultural Events – Diwali). As mentioned, the theater, consisting of 5,700 square feet, will have a capacity of up to 150 attendees. The proposed location is near the food court of the mall to allow easy accessibility to restrooms, parking, and refreshments.

While North Point Mall will not charge for rental of the space, the City would be financially responsible for the cost of utilities and trash service. The equipment, lighting, and staging equipment purchased by the City for the proposed performance space is entirely modular to allow the items to be relocated to another location or repurposed if North Point Mall or the City of Alpharetta should decide the partnership is no longer beneficial.

THE MEMORANDUM OF UNDERSTANDING:
The Memorandum of Understanding (MOU), attached hereto, formalizes the agreement between North Point Mall and the City of Alpharetta regarding the use of space at North Point Mall for a community stage. In summary, the City agrees to refurbish the space for use as a community stage (tenant space # 2208, more commonly known as the Old Foot Locker location), only permit live performances within the space, and cover the cost for utilities and trash service. In exchange, North Point Mall will lease the space free of charge, cover routine maintenance and repairs, and permit the City to retain any revenues and fees generated from facility usage. Further details pertaining to stage hours of operation, cross-promotion responsibilities, termination, etc. may be found in the MOU.

The MOU would be valid for a period of three years from the date of commencement, after which the City and North Point Mall may explore the possibility of extension.

RECOMMENDATION EXPLANATION:
Staff are in favor of the MOU for the establishment of a pilot community stage. The above-mentioned MOU will further the City's vision of promoting Arts & Culture by developing and piloting a community stage in Alpharetta. The stage will increase the offerings of cultural performances made available to the public by creating a space that encourages and engages local productions.

Currently, a void exists for indoor performance space with lighting and stage equipment for these groups. Often, the spaces available for productions are too grand to capture the intimacy and ambiance perfect for smaller, bespoke performances or are too small to be adaptable to the ideal number of ticketholders for maximum profit. The space proposed by North Point Mall and City staff provides flexibility to capture the balance of a larger gathering while preserving the essence of an intimate stage setting. Additionally, the City has minimal overhead cost and most investment is in modular equipment that can be repurposed upon the end of the agreement and North Point Mall benefits from the increased foot traffic (as the mall awaits the impending redevelopment).

ALTERNATIVES:

There are two alternatives to this recommendation:

1. Defer approval of the Memorandum of Understanding and provide staff with direction as to: (1) changes that need to be incorporated into the MOU in order for it to be consistent with the City Council's vision for a Community Stage; or (2) additional steps/actions that staff should take in order to advance the project.
2. Deny approval of the Memorandum of Understanding, in which staff will continue the search for a location for Community Theater productions.

ATTACHMENTS:

1. COA-NPM Community Stage MOU
2. Exhibit A - Tenant Space Map
3. Exhibit B - Tenant Handbook
4. Community Stage - Visuals

MEMORANDUM OF UNDERSTANDING

This Memorandum of Understanding ("MOU") is made and effective this _____ , day of _____, 2024 (the "Effective Date"), by and between **REEP-RTL NPM GA, LLC d/b/a North Point Mall** ("NPM"), with principal office located at 51 Madison Avenue, New York, NY 10708, and the **City of Alpharetta**, a Georgia municipal corporation, located at 2 Park Plaza, Alpharetta, Georgia 30009 ("City"). NPM and City are sometimes referred to in this MOU individually as a "Party", or collectively as the "Parties."

1. PURPOSE

1.1 The purpose of this MOU is to allow the City to create a 150-seat theater located in Space #2208 of North Point Mall, 2208 North Point Circle, Alpharetta, Georgia 30022, consisting of 5,700 square feet (the "Alpharetta Community Theater"). The Alpharetta Community Theater is more specifically identified in the attached **Exhibit "A**", which is incorporated herein. Notwithstanding anything in this Lease to the contrary, Space #2208, as set forth herein, will be accepted in its "as-is condition" and, at the termination of this MOU, as set forth in Section 6.1, Space #2208 is to be returned to NPM broom clean and the Alpharetta Community Theater may not remove any fixture (other than trade fixtures and furniture) from Space #2208.

1.2 Performances at the Alpharetta Community Theater will be put on for the benefit of City residents and may include, but are not limited to, performances by ACT1 Theater, City Center Players, The Pretenders, Alpharetta Symphony Orchestra and Youth Symphony Orchestra, Alpharetta City Band, Alpharetta Community Chorus, Metropolitan Ballet, Music Match Performances, Movie Star Camp, Rock Band Camp, and Sideways Dance Company.

1.3 All performances in the Alpharetta Community Theater will be live, and no movies or other audio-visual performances will be permitted to be screened or shown, pursuant to AMC Theater restrictions. In addition, no simulcasts or telecasts of the performance will be permitted. All events will comply with the reasonable rules and regulations of NPM.

1.4 The Alpharetta Community Theater will be used for rehearsals and practices for such live performances. Concessions, consisting of snacks and non-alcoholic beverages for City events, subject to the below, may be provided at, sold at, or brought into theater performances. Any concessions are intended for on-premises (inside of Alpharetta Community Theater) consumption.

1.4.1 City events will not serve alcoholic beverages except for a partnered event.

1.4.2 Alcoholic beverages may be served at non-City events, subject to the Alpharetta Arts Center Application and requirements under the City of Alpharetta Alcohol Catering Permit and Individuals Pour Permit. Any third-party event, as allowed pursuant to Section 3.9 herein, shall comply with the reasonable insurance requirements of NPM.

1.4.3 Any alcoholic beverages may only be sold provided City has the required permits to sell such beverages and subject to City's obtaining liquor liability coverage reasonably satisfactory to NPM.

2. NPM'S RESPONSIBILITES

2.1 NPM will be responsible for all as-needed HVAC repairs to the roof-top HVAC unit that serves the Alpharetta Community Theater, as well as roof repairs, sprinkler system repairs, and structural repairs serving the Alpharetta Community Theater; except for any repairs necessitated by the willful or negligent misconduct of the City or those within the control of the City. If necessary, in NPM's judgement, and within a timely manner, NPM will be responsible for replacing the HVAC system.

2.1.1 The City may utilize third parties in the operation of the facility. The City will promptly notify NMP in writing of all third-party vendors used. Third party vendors will evidence insurance coverage pursuant to NPM's reasonable guidelines; and the City will hold NPM harmless for any liability resulting from the use of any third-party operator or vendor.

2.1.2 The City will have a process and train third party groups to use the space and follow NPM guidelines. NPM will give the City a list of center guidelines to follow.

2.2 As relates to areas exterior to the Alpharetta Community Theater, NPM will be responsible for ensuring all fire alarms and fire systems are up to code and timely updated as reasonably necessary.

2.3 NPM will ensure the food court restrooms, to be used by Alpharetta Community Theater patrons, are cleaned and stocked at the beginning of all performances and then cleaned following performances. However, this responsibility will only occur during normal center operating hours which are currently Monday through Thursday 11am to 7pm, Friday and

Saturday, 11am to 8pm and Sunday 12pm to 7pm. There are extended Holiday hours, which change yearly.

2.4 NPM will be responsible for reasonable security for the common areas and NPM will provide a reasonable security presence to secure such common area and provide directional assistance to patrons of the Alpharetta Community Theater.

2.5 Working in conjunction with the City, NPM will utilize reasonable efforts to cross-market and promote performances by the City and/or a third party that is held in the Alpharetta Community Theater and that qualifies for cross promotion. NPM will, in its reasonable judgement, cross-market and promote all performances by the City and/or a third party that is held in the Alpharetta Community Theater and that qualifies for cross promotion. After the underlying MOU is executed by both Parties, the City and NPM will work on these qualifications to include social media collateral, deadlines, logos, and any additional marketing to help promote the performances.

2.6 NPM will send the City a calendar of events taking place in North Point Mall each month. In turn, NPM will notify the City three months prior for any larger impact events that have the potential to interfere with a performance due to noise impact, parking, or anything that might interrupt a performance in the Alpharetta Community Theater, but only if known by NPM at the time that is three months prior. If unknown, NPM will inform the City as soon as reasonably possible upon securing a large impact event. The City will reciprocate the same responsibilities in this clause to NPM.

3. CITY OF ALPHARETTA'S RESPONSIBILITES

3.1 The City will refurbish and/or restore the interior of Space# 2208, as identified in Exhibit "A", to create the Alpharetta Community Theater. This refurbish and/or restoration includes, but is not limited to, removal of existing shelves, painting of walls and ceiling, cleaning existing carpet, electrical lighting rerouting for front and back house (pursuant to general theater lighting standards), as well as installation of a system for creation of fabric and/or solid movable walls. All such refurbishments and restorations will comply with NPM's standard guidelines and are subject to NPM's approval, not to be unreasonably withheld. Subject to Landlord's reasonable written approval, Tenant may add one (1) storefront sign on the exterior of the Alpharetta Community Theater.

3.2 The City will be responsible for HVAC Repairs (solely to those ducts, VAV box, and vents within and exclusively servicing Space #2208), electrical, plumbing, and other space repairs including but not limited to storefront glass, doors, restroom repairs, flooring

repairs, etc. within the Alpharetta Community Theater. Additionally, and as required by applicable code(s), The City will be responsible for all modifications and updates in Space # 2208 so as to comply with such code(s).

3.3 The City will be responsible for the procurement and payment of applicable permits for any refurbish/restoration projects in Space # 2208.

3.4 The City will manage the Alpharetta Community Theater, including, but not limited to usage, maintenance, scheduling, interior cleaning, concessions, and operations.

3.5 The City will share a monthly calendar (including performances open to the public as well as rehearsals) with NPM and NPM security. These monthly calendars are to be submitted to NPM no later than thirty (30) days prior to the first day of each month.

3.6 The City is authorized to operate the Alpharetta Community Theater past closing hours in the evenings. The City will send to NPM a performance schedule each month and advise of operating hours that will or are projected to exceed normal closing hours. However, 12 am is the latest that the Alpharetta Community Theater can operate on any given evening. Any additional security for the common areas which is required for such performances, which security is above and beyond the security NPM would reasonably have available, will be provided by and at the cost of the City.

3.6.1 The parties understand this performance schedule is required in order for NPM to schedule the necessary HVAC and lighting services, and to ensure NPM Security is aware of who is in the building or on property, etc.

3.7 The City is authorized to place NPM-approved signage at the entrance of North Point Mall and along the way to the elevator(s) and/or escalator(s) in order to direct the public to the Alpharetta Community Theater. The City is further authorized to place directional signage one hour prior to a performance, subject to City Ordinances and as reasonably approved by NPM.

3.8 The City will be allowed to allocate stages, dressing rooms, decorative lighting, furniture, amenities, artwork, and equipment inside of the Alpharetta Community Theater space as needed ("Theater Equipment"). The City will be responsible for the cost of all such Theater Equipment.

3.9 NPM authorizes the City to rent out the Alpharetta Community Theater to third parties, including but not limited to, the Alpharetta Arts Center and other City facility users. Prior

to any such third-party rentals, the City shall provide NPM with a draft of the event schedule each three (3) months, or as needed when new events are approved by the City.

3.10 The City may establish a fee schedule for use of the facility and shall be responsible for the collection of these fees.

3.11 The City will have a training process for third party groups before permitting use of the Alpharetta Community Theater and follow the NPM Tenant Handbook. A copy of the NPM Tenant Handbook is attached and incorporated herein as **Exhibit "B"**.

3.12 The City shall establish a written set of policies and procedures for all aspects of the operation, subject to review and approval by NPM.

3.13 The City shall be responsible for appropriate staffing of the Alpharetta Community Theater during operating days and hours. The Alpharetta Community Theater will not be required to operate during normal center operating hours which are currently Monday through Thursday from 11am to 7pm, Friday and Saturday from 11am to 8pm and Sunday from 12 to 7pm. Holiday Hours during the months of November and December may be extended. North Point Mall is closed for business on Easter, Christmas Day, and Thanksgiving Day. The Alpharetta Community Theater will not be able to operate on these days.

4. PAYMENT

4.1 The City will pay NPM's third party waste vendor for monthly waste removal / recycling services. The monthly fee is $160.42 and will begin to accrue once the Alpharetta Community Theater opens, such amount to be subject to reasonable increases.

4.2 NPM agrees to allow the City use Space # 2208 free of rent. The City will timely pay for monthly electricity (directly to Georgia Power) as well as water and sewer usage (billed by NPM) for the space facility.

4.3 The City will retain any revenues and fees generated from the Alpharetta Community Theater. The revenue and fee sources will be limited to tickets sales for performances, third-party performance fees, concession sales and any ancillary sales related to a performance (including, but not limited to, T-shirts or memorabilia specifically related to the performance).

5. INDEMNIFICATION AND INSURANCE

5.1 To the extent allowed by applicable law, City shall protect, defend, indemnify, save and hold harmless NPM, its partners, subsidiaries, officers, directors, employees, agents and Trademark Property Company, its officers, directors, employees and agents and any tenant or occupant of North Point Mall or ground or underlying lessors of North Point Mall as well as Trademark Management Company, TPC GP LLC Ltd., Trademark Management, Ltd, Trademark Property Services, and their respective managers, officers, directors, employees, representatives, agents, successors, and assigns, and North Point Mall LLC, REEP-RTL NPM GA LLC and its members, owners, affiliates, managers, officers, directors, employees, representatives, agents, successors, against and from any and all claims, demands, fines, suits, actions, proceedings, orders, decrees and judgments of any kind or nature by or in favor of anyone whomsoever, and against and from any and all costs, damages and expenses, including attorney's fees, resulting from, or in connection with, loss of life, bodily or personal injury or property damage arising, directly or indirectly, out of or from, or on account of, any accident or other occurrence in, upon, at or from use of Space #2208, or occasioned in whole or part through the negligent use of occupancy of Space #2208 .

5.2 Upon execution of the underlying MOU, the City will provide NPM with a Certificate of Insurance (COI) evidencing NPM-established insurance limits; and agree to name NPM and any associated trademark property company as additional insureds. As relates to any contractor of the City, such contractor will provide proof of insurance as is reasonably requested by Landlord.

6. TERM AND TERMINATION

6.1 The Parties agree that this MOU, as required by O.C.G.A. § 36-60-13, shall terminate absolutely and without further obligation on the part of the City on June 30th of each fiscal year of the Term, and further, that this MOU shall automatically renew on July 1st of each subsequent fiscal year absent the City's provision of written notice of non-renewal to NPM at least one hundred twenty (120) days prior to the end of the then year. To the extent applicable to this MOU, title to any supplies, materials, equipment, or other personal property shall remain in NPM until fully paid for by the City.

6.2 Both NPM and the City may terminate this MOU for convenience at any time upon providing written notice thereof to the other Party at least 120 days (or thirty (30) in the event of a material casualty to the Alpharetta Community Theater premises) in

advance of the termination date, however, and if the City is not operating from the Alpharetta Community Theater, NPM may terminate this MOU upon thirty (30) days notice to the City. The term "operating" is defined as utilizing the subject space in a way that promotes the community theater and includes and is not limited to theater shows, events, staff onsite, rehearsals, and meetings.

6.3 In the event of a termination within one hundred twenty (120) days of the Alpharetta Community Theater opening date or CO issuance, whichever is first, NPM will pay the City the unamortized portion of $45,000 within sixty (60) days after such termination. Amortization will be based on $45,000, which represents the amount of investment to directly upgrade the space which cannot be removed upon early termination. The amortization will be on a straight-line basis.

6.3.1 NPM will not be responsible for reimbursing any unamortized amount of the $45,000 after June 30, 2025.

7. MISCELLANEOUS

7.1 Upon execution of this MOU, a designee from the City and from NPM shall be appointed as contacts. The City designee shall send a monthly schedule to the NPM designee. If the NPM designee has uncertainties or concerns about the schedule, they will review these concerns with the City designee within a timely manner.

7.2 The City may utilize third parties in the operation of the Alpharetta Community Theater. The City will notify NMP, in writing, of all third-party vendors used. Third-party vendors will evidence reasonable liability insurance pursuant to NPM's guidelines; and the City will hold NPM harmless for any liability resulting from the use of any third-party operator or vendor.

7.3 Nothing contained in this MOU shall be construed to be a waiver of the City's sovereign immunity or any individual's qualified good faith or official immunities.

7.4 Nothing herein shall be construed as creating any individual or personal liability on the part of any of City's elected or appointed officials, officers, boards, commissions, employees, representatives, consultants, servants, agents, attorneys or volunteers. No such individual shall be personally liable to NPM or any successor in interest in the event of any default or breach by the City or for any amount which may become due to NPM or successor or on any obligation under the terms of this MOU. The Parties agree that their sole and exclusive remedy, claim, demand, or suit shall be directed and/or asserted only against NPM or the City, respectively, and not against any elected or appointed official, officers, boards, commissions, employees, representatives, consultants, servants, agents, attorneys and volunteers.

7.5 This MOU shall be exclusively for the benefit of the Parties and shall not provide any third parties with any remedy, claim, liability, reimbursement, cause of action or other right.

7.6 The Parties agree not to assign or transfer any interest in, or delegate any duties of this MOU, without the prior express written consent of the City.

7.7 In accordance with Title VI of the Civil Rights Act of 1964, as amended, 42 U.S.C. § 2000d, section 303 of the Age Discrimination Act of 1975, as amended, 42 U.S.C. § 6102, section 202 of the Americans with Disabilities Act of 1990, 42 U.S.C. § 12132, and all other provisions of Federal law, NPM agrees that, during performance of this MOU, NPM, for itself, its assignees and successors in interest, will not discriminate against any employee or applicant for employment, any subcontractor, or any supplier because of race, color, creed, national origin, gender, age or disability. In addition, NPM agrees to comply with all applicable implementing regulations and shall include the provisions of this paragraph in every subcontract for services contemplated under this MOU.

7.8 This MOU constitutes an agreement between and, as importantly, represents a working partnership between both parties to work towards the success of the Alpharetta Community Theater; and to resolve any disagreements in an amicable manner.

7.9 NPM shall have the absolute right at any time and from time to time to assign, convey or otherwise transfer its interest in the Alpharetta Community Theater and this MOU, without consent of The City, and only the current owner of the Alpharetta Community Theater shall be obligated to perform the covenants and obligations of NPM set forth in this MOU. Upon any sale, conveyance or other transfer of the Alpharetta Community Theater by NPM, the transferor automatically shall be relieved of liability for any obligation or liability thereafter accruing.

7.10 Any liability of NPM for a default by NPM under this MOU, or a breach by NPM of any of its obligations under the MOU, shall be limited solely to its interest in North Point Mall and in no event shall any personal liability be asserted against NPM in connection with this MOU nor shall any recourse be had to any other property or assets of NPM, its partners, directors, officers, trustees, members, shareholders or any other persons or entities having any interest in NPM.

7.11 This MOU may be executed in counterparts and by the PDF/electronic transmittal, each of which shall be deemed an original, but all of which, together, shall constitute one and the same document.

[SIGNATURES TO FOLLOW]

IN WITNESS WHEREOF, the Parties support the goals and objectives of this Memorandum and have hereunto executed this Memorandum of Understanding on the day and year first above written.

REEP-RTL NPM GA LLC

By: _____

Crystal N. Wilson, Vice President

Date: _____

CITY OF ALPHARETTA, GEORGIA

By: _____

Jim Gilvin, Mayor

Date: _____

ATTEST:

By: _____

Title: _____

Date: _____

APPROVED AS TO SUBSTANCE:

By: _____

Chris Lagerbloom, City Administrator

APPROVED AS TO FORM:

By: _____

Jennifer McCall, City Attorney

EXHIBIT A

Map of tenant space

EXHIBIT B

Copy of NPM Tenant Handbook

"AS-IS" / "PARTIAL TURN KEY" RESPONSIBILITY SCHEDULE

(2) NOTE: NO LANDLORD WORK IS REQUIRED UNLESS NOTED OTHERWISE IN THE EXECUTED LEASE AGREEMENT.

Item	Supply: BSC G.C.	Supply: BSC	Supply: Landlord	Install or Perform: BSC G.C.	Install or Perform: BSC	Install or Perform: Landlord	Existing	Not Used	Notes
DIVISION 01– GENERAL REQUIREMENTS									
1. Pick–Up of All Construction Permits and Fees	●			●					
2. Specialty Permits & Fees (Signage, Fixturing, Etc.)		●			●				
3. Inspections and Certificate of Occupancy	●			●					
4. Utility Connection, Hookup, and Applicable Fees	●			●					
5. Temporary Heat and / or Utilities	●			●					
6. Temporary Enclosures / Construction Barricades	●			●					
O– By Landlord at Tenant Expense									
7. Daily Cleanup/ Debris Removal/ Const. Dumpsters	●			●					
8. Hazardous Substance / Material Removal	●			●					
9. Repair of Latent Defects (Including Struct./ Roof)	●			●					
10. Accessible Customer Parking			○			○	●		
O– Any upgrades to meet current code by LL									
11. Accessibility Routes/ Access to Leased Area			○			○	●		
O– Any upgrades to meet current code by LL									
12. Documentation of Discrepancies Prior to Bids Due	●			●					
DEMOLITION	●			●					
DIVISION 02– SITE WORK									
1. Temporary Parking							●		
2. Barricade Per Mall Criteria	●			●					
3. Demolition – Refer To Construction Documents	●			●					
DIVISION 03– CONCRETE									
1. Slab on Grade								●	
2. Saw Cutting / Core Boring/ Trenching	●			●					
3. Vapor Barrier at Slab Infill Areas as Required	●			●					
4. Floor Patch and/ or Leveling	●			●					
5. Storefront Ramp / Curb Cut (Accessible)			○			○		●	
O– Any upgrades to meet current code by LL									
6. Receiving Ramp (Accessible) When Required								●	
DIVISION 04– MASONRY									
1. Concrete Block								●	
2. Brick								●	
3. Precast Panels								●	
DIVISION 05– METALS									
1. Structural Steel							●		
2. Metal Studs									
A. Demising Partitions	○			○			●		
B. Workroom Partitions	●			●					
C. Restroom Partitions							●		
D. Smokewall and Bulkhead (Storefront)							●		
E. Exterior Wall & Furring								●	
F. Column Furring	●			●					
G. Other Partitions	●			●					
3. Reveal at Storefront Opening	●			●					
DIVISION 06– CARPENTRY									
1. Wood Blocking– Fire Retardant Treated	●			●					
DIVISION 07– MOISTURE CONTROL									
1. FRP	●			●					
2. Sealants / Caulking	●			●					
3. Waterproof Membrane	●			●			●		
DIVISION 08– DOORS AND GLAZING									
1. Storefront Doors and Hardware								●	
O– Refer to Door Schedule for Hdwr. Updates									
2. Storefront Glazing	●			●					
3. Sales to Workroom Door, Hardware, & Kickplate	●			●					
4. Hallway to Workroom Door, Hardware, & Kickplate								●	
5. Workroom to Service Corridor Door, Hardware, and Kickplate	●			●			●		
O– Refer to Door Schedule for Hdwr. Updates									
6. O.H. Security Grille	●			●					
7. Toilet Room Door, Hardware, & Kickplate	●			●					
8. Access Panel (Where Required)							○	●	
9. Other Doors	●			●					
10. Other Hardware	●			●					
11. Drywall Mounted Mirrors and Trim	●			●					3
DIVISION 09– FINISHES									
1. Gypsum Board									
A. Demising Partitions	○			○			●		
B. Hallway / Corridor Partitions								●	
C. Toilet Room Partitions								●	
D. Sales / Workroom Partitions	●			●					
E. Smokewall and Bulkhead	●			●			●		
F. Patch/ Repair of Existing Gyp. Bd. to Remain	●			●					
2. Carpet		●		●					4
3. Vinyl Tile	●			●					
4. Ceramic Tile		●		●					4
5. Wall Base and Floor Transitions	●			●					
6. Concrete Floor Polish								●	
7. Paint									
A. Sales Area	●			●					
B. Hallway / Corridor								●	
C. Toilet Rooms	●			●					
D. Workroom	●			●					
8. Floor Sealant	●			●					
9. ACM Panels at Storefront	●			●					
10. Ceiling									
A. T–Bar Ceiling Grid and ACT Tile									
I. Sales Area	●			●					
II. Workroom	●			●					
III. Vestibule								●	
IV. Hallway / Corridor								●	
B. Gypsum Board Ceiling									
I. Toilet Rooms							●		
II. Storefront Soffit	●			●					
DIVISION 10– SPECIALTIES									
1. Toilet Room Accessories									
A. Grab Bars	●			●					
B. 24x36 Mirrors With Tilt Capability	●			●					
C. Toilet Paper Dispenser	●			●					1
D. Hand Soap Dispenser	●			●					1
E. Paper Towel Dispenser	●			●					1
F. Garment Hook	●			●					
2. Signage									
A. Storefront		●			●				
B. Rear (Exterior)								●	
C. Side (Interior)		●			●				
D. Blade (Under Canopy) Non–Illuminated		●			●				2
E. Rear Door (Tenant Address / I.D.)	●			●					
F. Street Address / Suite Number at Storefront								●	
G. Pylon / Monument Signage								●	
H. All Interior Sales and Marketing Signage		●			●				
I. ADA Sign	●			●					
J. Safety Vinyls		●			●				
K. Storefront Patch/Repair		●			●				
3. Front and Rear Door Buzzer Systems	●			●					
4. Customer Counter	○	●		○	●				
O– Provide Empty Conduit and Pull String									
5. Storefront/ Receiving Ramp Accessible Hand Rail								●	
6. Knox Box Emergency Fire Key Box or Equal Per Code	●			●					
O– If Not Required By Code									
DIVISION 11– EQUIPMENT									
1. Fire Extinguishers / Fire Extinguisher Cabinets	●			●					
DIVISION 12– FURNISHINGS									
1. Sales Area Display Fixtures		●			●				
2. Workroom, Manager's Area, & Break Area Fixtures		●			●				
3. Specialty Displays/ Interior Dept./ Brand Signage		●			●				
4. Graphic Track System		●			●				
5. Storefront Ceiling Display Grids and Hooks		●			●				
6. Display Fixture Mirrors		●			●				3
DIVISION 13– SPECIAL CONSTRUCTION									
1. Storefront Facade/ Signband Area	●			●					
O– Refer Back To Drawings For Responsibility									
DIVISION 23– MECHANICAL									
1. Equipment									
A. Air Handling Unit/ Roof Top Unit/ VAV/ Etc.	●			●					
B. Exhaust Fans/ Smoke Evacuation Fans/ Etc.	●			●					
C. Toilet Room Exhaust Fan								●	6
2. Thermostat, Remote Sensor, & Panel									
A. Thermostat Associated Wiring		●			●				4
3. HVAC Distribution									
A. Main Trunk Line Ductwork	●			●					
B. Branch Distribution Ductwork	●			●					
C. Diffusers	●			●					
D. Fire and/or Smoke Dampers (When Required)	●			●					
E. Duct Smoke Detectors (EC Supply, MC Install)	●			●					
4. Exhaust Duct Distribution	●			●					
5. Plumbing									
A. Water Meter	●			●					2
B. Water Connection (Stub to Space)	○			○			●		
O– Modify as Reqd. to Connect to Existing									
C. Water Distribution	●			●					
D. Sanitary Connection (Stub to Space)	○			○			●		
O– Modify as Reqd. to Connect to Existing									
E. Sanitary Distribution	●			●					
F. Plumbing Vent Connection (Stub to Space)	○			○			●		
O– Modify as Reqd. to Connect to Existing									
G. Plumbing Vent Distribution	●			●					
6. Plumbing Fixture									
A. Water Closet	●			●			●		6
B. Lavatory	●			●			●		6
C. Urinal								●	
D. Mop Sink and Accessories	●			●					
E. Drinking Fountain	●			●					
7. Water Heater	●			●					
8. Sprinkler System									
A. Main Sprinkler System Supply to Space							●		
B. Sprinkler System Branch Lines	●			●					
C. Sprinkler System Drops to Heads	●			●					
D. Storefront Display / Entry Sprinklers	●			●					
E. Sales Area Sprinklers	●			●					
F. Workroom Area Sprinklers	●			●					
G. Toilet Room Sprinklers	●			●			●		
H. Hallway / Corridor Area Sprinklers	●			●					
DIVISION 26– ELECTRICAL									
1. Main Distribution Switchgear (Beyond Leased Space)							●		
2. Electric Meter	●			●					2
3. Electrical Conduit to Leased Space							●		
4. Service Feeder Cable to Leased Space							●		
5. Secondary Electrical Gear (Within Leased Space)									
A. 277 / 480 Voltage Panels and Switchgear	●			●					
B. 120 / 208 Voltage Panels and Switchgear	●			●					
C. Transformer	●			●			●		
D. L.L. Timeclock If Req'd								●	
E. Lighting Control System							●		4
6. Electrical Distribution Within Tenant Space							●		
7. Lighting Fixtures									
A. Recessed Storefront / Entry Lighting		●		●					4
B. Under Soffit Lighting		●		●					4
C. 2' X 2' Fluorescent (Sales)		●		●					4
D. 2' X 4' Fluorescent (Workroom)		●		●					4
E. 10" X 4' Fluorescent Wall Washer (Sales)		●		●					4
F. 1' X 4' Fluorescent (Toiletroom)		●		●					4
G. 2' X 4' Fluorescent (Hallway / Corridor)								●	
H. Emergency Lighting		●		●					4
I. Exit Signage		●		●					4
J. Track Lighting		●		●					4
K. Fixture Display Lighting		●		●					4
L. Exterior Security Light Over Rear Door		●		●					4
8. Ceiling Mounted Smoke Detectors								●	
9. Fire Alarm Notification Equipment	●			●					
10. Conveinence Receptacles	●			●					
11. Dedicated Sign Circuit	●			●					
12. Convenience Display Fixture Power	●			●					
13. Computer/ Telephone Equipment and Wiring	○	●		○	●				
O– Provide Empty Conduit/J–Boxes/Pull String									
14. Cashwrap POS Wiring	●			●					
15. Security/ Alarm System		●			●				
16. Audio System Speakers, Amplifier, Receiver, Associated Wiring and Shelf		●			●				

The information contained in this responsibility schedule is intended to be a guide provided for convenience and reference purposes only. This schedule may not contain all work necessary for completion of the project as indicated in the construction documents. Refer to the construction documents for specific responsibilities and work to be performed for each item.

Items listed with multiple responsibilities may be coordinated work between parties or existing items which may require modification, completion, etc. to comply with the requirements of the construction documents. Items are to be installed by the provider unless otherwise noted.

"BSC" refers to Brown Shoe Company, Inc. and those suppliers and vendors under their direct control.

Items indicated as "Not Used" do not apply to this specific construction project.

The G.C. is responsible for coordinating all work by all trades through project completion, including those trades and vendors under the direct control of Brown Shoe. Delivery schedules for items supplied by Brown Shoe or suppliers and vendors under their direct control shall be coordinated through the Brown Shoe Construction Manager.

RESPONSIBILITY SCHEDULE NUMBERED NOTES:

1. Toilet room accessories are provided to the G.C. at no cost. Contact Staples Advantage at start of construction to order. Refer to Vendor Contacts this sheet. Do not install any other accessories.
2. Refer to Lease Agreement for supply and installation responsibilities and information.
3. Refer to detail(s) on sheets A4.0 and A7.0 for more information.
4. G.C. to coordinate with Vendors for ordering, shipments, delivery, and installations as applicable to each item. Brown Shoe to pay for items through National Accounts agreements.
5. Storefront millwork paid for by Brown Shoe, shipped by millwork vendor, and received and installed by G.C., The G.C. is responsible for receipt of and review of millwork shop drawings. Refer to Vendor contacts on this sheet.
6. G.C. to clean, patch, and repair as required to bring to "Like New" condition. If fixture cannot be reused, coordinate with B.S.C. to replace as required.

CODE DATA

I. GENERAL SITE AND PROJECT INFORMATION

A. This is an existing tenant space in a multiple tenant covered mall building. The existing shell building is being reused with no modifications to the existing structure.
B. The existing building is protected throughout by an automatic fire suppression system.
C. There will be no change in occupancy type. currently use is retail /merchantile the remodeled space occupancy is retail /merchantile
D. These construction documents indicate for accessibility to be maintained by the landlord from the public way into, and throughout the building to the lease space.
E. The maximum number of employees per shift will be four or less.

II. GOVERNING CODES – STATE OF GEORGIA – CITY OF ALPHARETTA

2012 INTERNATIONAL BUILDING CODE	W/ GA AMENDMENTS
2012 INTERNATIONAL PLUMBING CODE	W/ GA AMENDMENTS
2012 INTERNATIONAL FIRE CODE	W/ GA AMENDMENTS
2012 INTERNATIONAL MECHANICAL CODE	W/ GA AMENDMENTS
2012 LIFE SAFETY CODE	
2011 NATIONAL ELECTRICAL CODE	W/ GA AMENDMENTS
2009 INTERNATIONAL ENERGY CONSERVATION CODE	W/ 2012 GA AMENDMENTS
2004 ASHRAE STANDARD 90.1	W/ GA AMENDMENTS
GEORGIA ACCESSIBILITY CODE	

III. USE AND OCCUPANCY CLASSIFICATION

Sec 309.1 – Retail sales – Mercantile use group – M

IV. TYPE OF CONSTRUCTION

Table 602.2– Existing Building Construction Type = II–B non combustible

V. INTERIOR FINISHES

Table 803.9– Interior wall and ceiling finishes for Occupancy Group M, sprinklered, are Class B for exit enclosures and exit passageways, Class C for corridors and other exitways, and Class C for rooms and enclosed spaces.

VI. OCCUPANT LOAD

Life Safety Code Table 7.3.1.2

Room No.	Use	Use Class	Size Sq. Ft.	Sq. Ft. Per Person	No. Persons
100	Retail Sales	M	5,042	30g	169
110	Storage	S2	540	300g	2
120 & 121	Toilet Rooms	B1	123 Total	100g	2
Total:			5,705		173

VII. EXIT / EGRESS

Life Safety Code Table 7.3.3.1, Minimum Egress width – (total occupant load) 173 X .2"=34.6" (324" Actual)
Sec. 1014.3– Common path of Egress Travel.
The common path of travel does not exceed 75 feet in this tenant space.
Table 1016.1– Maximum exit access travel distance, measured along the exit path, shall not exceed 200 feet for unsprinklered buildings of occupancy Groups M. Travel distances may not exceed 250 feet when the building is sprinklered.
Sec. 1017.2– Minimum clear aisle widths for public areas in Groups M occupancies shall be determined by Sec. 1005.1, (ABOVE) but shall not be less than 36 inches.
Table 1021.1
Minimum of 2 exits required for 1–500 occupants, 2 exits provided.

VIII. DOOR REQUIREMENTS

Sec. 1008.1.9.3– (2.2) Egress doors shall be readily openable from the egress side without the use of a key or special knowledge or effort. The main exterior door or doors in Group M may be equipped with a key operated locking device from the egress side if the device is readily distinguishable as locked and there is a sign stating "This door to remain unlocked when building is occupied".

IX. RESTROOM FACILITIES

Tab. 2902.1– Mercantile occupancies require (for each sex) 1 water closet per 500 persons, 1 lavatory per each 750 persons, 1 drinking fountain per each 1000 persons, and 1 service sink.

NOTWITHSTANDING THE FOREGOING, TENANT'S REVIEW OF PLANS AND SPECIFICATIONS, AND TENANT'S ACCEPTANCE OF THE PREMISES, SHALL IN NO EVENT CREATE AN EXPRESSED OR IMPLIED CONFIRMATION THAT LANDLORD'S PLANS AND SPECIFICATIONS, NOR LANDLORD'S BUILD–OUT OF THE PREMISES IS IN ACCORDANCE WITH THE REQUIREMENTS OF APPLICABLE LAWS, CODES, ORDINANCES, AND REGULATIONS, INCLUDING BUT NOT LIMITED TO THE MOST CURRENT VERSION OF THE AMERICANS WITH DISABILITIES ACT.

LANDLORD REQUIRED CONTACTS

FIRE ALARM & SPRINKLER
APEX FIRE PROTECTION, LLC
PHONE: 770–517–0963

EMS SYSTEM
WAY POINT SYSTEMS
PHONE: 770–649–6100

EMERGENCY PA SYSTEM
SEEMORE OF ATLANTA
PHONE: 770–439–8556

HVAC VAV BOXES
1st MECHANICAL SERVICES, INC.
1295 BLUEGRASS LAKE PARKWAY
ALPHARETTA, GA 30004
CONTACT: EMMET RIDDICK, JOHNNY POE
PHONE: 770–517–0963

REAR DOOR SIGN
FASTSIGNS
CONTACT: JOE LU
PHONE: 770–993–3400

ROOFING
MID–SOUTH ROOFING
CONTACT: MARK OR PAT
PHONE: 404–361–5154

OMEGA electrical is a recommended electrical contractor - tenant is not required to use them.

(2) NOTE: TENANT'S GENERAL CONTRACTOR TO CHECK IN WITH MALL OPERATIONS MANAGER PRIOR TO WORK START.

A COPY OF THESE PLANS MUST BE IN THE POSSESSION OF THE TENANT'S GENERAL CONTRACTOR AT THE PRE–CONSTRUCTION MEETING AND ON SITE DURING CONSTRUCTION.

APPROVAL IS SUBJECT TO VERIFICATION OF CONDITIONS AND COMPLIANCE WITH PROCEDURES FROM LOCAL GENERAL GROWTH PROPERTIES AUTHORITY.

LANDLORD NOTES
–TENANT'S GENERAL CONTRACTOR SHALL SUBMIT A CONSTRUCTION DEPOSIT WITH LANDLORD'S ON–SITE REPRESENTATIVE PER CENTER REQUIREMENTS.
–TENANT'S GENERAL CONTRACTOR MUST CHECK IN WITH LANDLORD'S ON–SITE REPRESENTATIVE PRIOR TO WORK START.
–TENTANT'S CONTRACTOR WILL REPAINT AND / OR REPAIR LANDLORD'S PROPERTY, (NEUTRAL PIERS, BULKHEADS, REAR CORRIDOR, WTC.) DAMAGED DURING TENANT IMPROVEMENT.
–ALL CEILING MATERIAL MEST HAVE A MINIMUM CLASS "A" FIRE RATING.
–SUPPORT WIRES FOR LAY–IN CEILING GRID, LIGHTS, HVAC EQUIPMENTS, ETC. MUST NOT BE CONNECTED TO ANY OF LANDLORD'S ELECTRICAL, PLUMBING, FIRE PROTECTION PIPING AND MECHANICAL EQUIPMENT OR DECK ABOVE.
–ALL SUPPORT WIRES MAY ONLY BE CONNECTED TO TOP CORD OF JOIST AND / OR STRUCTURAL MEMBERS.
–ALL MATERIALS USED IN THE CONSTRUCTION OF THIS SPACE MUST BE ASBESTOS FREE.
–FOOD RELATED TENANTS AND UPPER LEVEL TENANT'S WITH BATHROOMS SHALL PROVIDE A WATER PROOF MEMBRANE IN WET AREAS. VERIFY WATER TEST PROCEDURE WITH LANDLORD'S ON–SITE REPRESENTATIVE.
–DO NOT CHANNEL CUT SLAB ON UPPER LELVEL. CORE DRILL ONLY AND INSTALL SUPPLEMENTAL SUPPORT FRAMING.
–ANY PENETRATION OF MODIFICATIONS TO STRUCTURAL STEEL OR CONCRETE MUST BE COORDINATED AND APPROVED BY LANDLORD'S ON SITE REPRESENTATIVE.
–IT IS THE RESPONSIBILITY OF THE TENANT'S ARCHITECT O TO FIELD VERIFY DIMENSIONS, UTILITY LOCATIONS AND CONDITIONS PRIOR AND DURING CONSTRUCTION.
–TENANT SHALL NOT PENETRATE LANDLORD'S METAL ROOF DECK ITH ANY TYPE OF FASTENERS.
–IT IS THE TENANT'S RESPONSIBILITY TO MAINTAIN THE INTEGRITY OF LANDLORD'S DEMISING WALLS, FLOOR SLAB, ROOF AND BUILDING STRUCTURE.
–TENANT TO REMOVE ANY EXISTING OR NEWLY ABANDONED MATERIALS, EQUIPMENT, PIPING, DUCTS AND WIRING FROM THE PREMISES. CAP SERIVCE AT POINT OF ORIGIN AND COORDINATE THIS WORK WITH LANDLORD'S ON SITE REPRESENTATIVE.
–TENANT'S MUST COMPLY WITH TITLE III OF THE AMERICAN'S WITH DISABILITIES ACT (ADA) AND ALL LOCAL AND STATE CODES.
–FREE STANDING SECURITY DEVICES ARE NOT ALLOWED IN THE CONTROL ZONE. SECURITY DEVICES SHALL BE CONCEALED FROM PUBLIC VIEW.
–TENANT IS TO MAINTAIN ANY EXPANSION JOINTS WITHIN THEIR LEASABLE AREA. INSTALL COVER PLATES PER CENTER REQUIREMENTS.
–TELEVISION ANTENNAS AND SATELLITE DISHES ARE NOT PERMITTED ON THE ROOF OR ATTACHED TO HVAC UNITS.
–TENANTS REQUIRING CABLE TELEVISION SHOULD REFER TO THEIR LEASE AND CONTACT THE LANDLORD'S ON SITE REPRESENTATIVE FOR ADDITIONAL INFORMATION.
–TENANT'S MUST COMPLY WITH THE CENTER'S TENANT CRITERIA MANUAL (AVAILABLE AT GGP.COM)
–APPROVAL OF THE PLANS AND SPECIFICATIONS BY LANDLORD SHALL NOT CREATE ANY RESPONSIBILITY BY LANDLORD FOR THEIR ACCURACY, SUFFICIENCY OR COMPLIANCE WITH LAWS OR RULES AND REGULATIONS. TENANT SHALL BE SOLELY RESPONSIBLE FOR THE PLANS AND SPECIFICATIONS. TENANT AGREES NOT TO BEGIN TENANT'S WORK UNTIL LANDLORD HAS APPROVED THE PLANS AND SPECIFICATIONS.

(2) REVISED FINAL SET

FAMOUS footwear

STORE # 3406
NORTH POINT MALL
1000 NORTH POINT CIRCLE
SUITE 2208
ALPHARETTA, GA 30022

GENERAL GROWTH MANAGEMENT, INC.
These working drawings have been reviewed for design intent only. It is the Tenant's obligation to comply with all established Tenant Design Criteria as set forth in the lease agreement, lease plan, construction handbook, bulletins or as otherwise notified, it is also the Tenant's obligation to comply with all applicable laws, ordinance, buildingcodes and regulations.
☐ APPROVED ☒ APPROVED AS NOTED
☐ DISAPPROVED RESUBMIT
DATE: 10-3-14 BY: PW

A COPY OF THESE PLANS MUST BE IN THE POSSESSION OF THE TENANT'S GENERAL CONTRACTOR AT THE PRE CONSTRUCTION MEETING AND ON SITE DURING CONSTRUCTION.

Approval is subject to verification of conditions and compliance with procedures from local General Growth Properites Authority.

PROJECT CONTACTS

CONSTRUCTION MANAGER
BROWN SHOE
8300 MARYLAND AVE.
CLAYTON, MO 63105
JAMIE BAIRD
PHONE: 314–854–4057
E–MAIL: jbaird@brownshoe.com

STORE PLANNING
BROWN SHOE
8300 MARYLAND AVE
CLAYTON, MO 63105
BARB FOOTE
PHONE: 314–854–4053
FAX: 314–854–2050
EMAIL: BFoote@BrownShoe.com

PERMIT EXPEDITOR
STATE PERMITS
319 ELAINES COURT
DODGEVILLE, WI 53533
AMY SHYMANSKI
PHONE: 608–319–2096 x8
FAX: 608–319–2011
EMAIL: AMY@permit.com

GENERAL CONTRACTOR (G.C.)
TO BE DETERMINED

LANDLORD CONTACT
GENERAL GROWTH PROPERTIES
110 NORTH WACKER DRIVE
CHICAGO, IL 60606
PHYLLIS WETHERALL
SR. TENANT COORDINATOR
PHONE: 312–960–5873
E–MAIL: phyllis.serbon@ggp.com

(2) **MALL CONTACT**
PAUL EHRET
OPERATIONS MANAGER
1000 NORTH POINT CIRCLE
ALPHARETTA, GA 30022
PHONE: 770–740–9273
E–MAIL: PAUL.EHRET@GGP.COM

BUILDING DEPT. CONTACT
INSPECTION & CODE ENFORCEMENT
217 ROSWELL STREET
ALPHARETTA, GA
TONY PIERCE, BUILDING OFFICIAL
PHONE: 678–297–6080
E–MAIL: tpierce@alpharetta.ga.us

ARCHITECT CONTACT
TRICARICO ARCHITECTURE & DESIGN
502 VALLEY ROAD
WAYNE, NJ 07470
MAUREEN WOLFE
PHONE: 973–908–2877
EMAIL: maureenw@tricarico.com

VENDOR CONTACTS

FLOORING - CARPET
MASLAND CONTRACTS
716 BILL MYLES DR.
SARALAND, AL 36571
RUSSEL SCHMITZ
PHONE: 251–679–3626
FAX: 251–679–3612
EMAIL: SchmitzR@MaslandCarpets.com

FLOORING - CERAMIC TILE
STORE FLOORS
6480 ROSWELL RD
ATLANTA, GA 30328
SANDRA FEW
PHONE: 678–638–1626
EMAIL: SFew@StoreFloors.com

GROUT
LATICRETE
PHONE: 800–243–4788
WEB: www.laticrete.com

VCT
MANNINGTON
PHONE: 856–935–3000
WEB: www.mannington.com

COLUMN ENCLOSURES & GLAZING SYSTEM
STYLMARK
BETHANY DANIELSON
PHONE: 800–328–2495
EMAIL: Info@stylmark.com
BDanielson@stylemark.com

STOREFRONT GRILLE
CORNELL STOREFRONT SYSTEMS
140 MAFFET ST., STE. 200
WILKES–BARRE, PA. 18705–1003
CHRISTOPHER SLOCUM
PHONE: 800–882–6773x520
EMAIL: CSlocum@CornellStorefronts.com

ALUMINUM COMPOSITE
MITSUBISHI PLASTICS COMP. AMERICA
401 VOLVO PARKWAY, BLDG #2
CHESAPEAKE, VA 23320
LAURA LEVINE, CUSTOMER SERVICE
PHONE: 800–422–7270
EMAIL: Laura@Alpolic.com

CEILING SYSTEM
ARMSTRONG WORLD INDUS., INC.
P.O. BOX 3001
LANCASTER, PA 17604
CUSTOMER SERVICE REP.
PHONE: 800–442–4212
FAX: 866–566–2593
EMAIL: ArmstrongCSA@Armstrong.com

LIGHTING
CITY LIGHTING PRODUCTS
4307 WEST PAPIN STREET
ST. LOUIS, MO 63110
STEVE BENTRUP & DAN BROWN
PHONE: 800–888–2572
EMAIL: sbentrup@citylighting.com
dbrown@citylighting.com

ENERGY MANAGEMENT SYSTEM
LIGHTSTAT, INC.
22 W. WEST HILL RD.
BARKHAMSTED, CT. 06063
ATTN: QUOTING DEPARTMENT
PHONE: 800–292–2444 x0
EMAIL: orders@lightstat.com

AUDIO SYSTEM
MOOD MEDIA NORTH AMERICA
7825 FAY AVE, STE. LL–A
LA JOLLA, CA 92037
KAREN KLEIS
PHONE: 858–810.2636
FAX: 858–362–2324
EMAIL: Karen.Kleis@Moodmedia.com

SECURITY SYSTEM
PROTECTION ONE
4221 W. JOHN CARPENTER FWY
IRVING, TX 75063
TONI TURNER
PHONE: 214–277–7242
FAX: 800–626–9698
EMAIL: ToniTurner@Protection1.com

TOILET ROOM ACCESSORIES
KIMBERLY–CLARK THROUGH
STAPLES ADVANTAGE
120 W. OPUS DR.
OAK CREEK, WI 53154
PAUL CASSIMATIS
PHONE: 314–795–6284
EMAIL: Paul.Cassimatis@Staples.com

METAL FIXTURES
LOZIER
6336 PERSHING DRIVE
OMAHA, NE 68110
KEVIN MURPHY & CORY LAIB
PHONE: 515–964–1400
E–MAIL:
Kevin.Murphy@Lozier.Biz
Cory.Laib@Lozier.Biz

GRAPHIC TRACK SYSTEM, WOOD FIXTURES, BENCHES
PREMIER EUROCASE
12000 E. 56TH AVE #K
DENVER, CO 80239
CHRIS PARCESEPE, JERRY PERGOLA,
GARY SCHELLENGER & SARAH STUART
PHONE: 303–373–9718 x207
E–MAIL: CParcesepe@premiereurocase.com
SStuart@StuartSolutions.net
GSchellenger@premiereurocase.com

VICTORY FIXTURE
TRIAD MANUFACTURING
CUSTOMER SERVICE
LAURA HOLT
PHONE: 314–898–9052
MAIN: 314–381–5280
FAX: 314–381–7786
EMAIL: lholt@triadmfg.com

EXIT WALL FRAME
RADIANT PRODUCTS
10655 GATEWAY BLVD.
ST. LOUIS, MO 63132
KENDALL MUELLER
PHONE: 800–800–4114
FAX: 636–225–3503
EMAIL: KMueller@RadiantProducts.com

PAINT
BENJAMIN MOORE
JASON WALKER
PHONE: 800–642–5678
EMAIL: Jason.Walker@BenjaminMoore.com

PAINT
SHERWIN WILLIAMS
BROOK NIENSTEDT
PHONE: 317–714–5610
FAX: 513–771–1924
EMAIL:
Brook.B.Nienstedt@Sherwin.com

INTERCHANGEABLE LOCKS / REAR DOOR ALARM
SECURITY SOURCE
LYNN LENTZ
PHONE: 978.983.8189
EMAIL: bsconstruction@securitysource.com

DOOR CLOSERS
LCN
PHONE: 800–526–2400
WEB: www.lcnlosers.com

LOCKSETS
SCHLAGE
PHONE: 800–847–1864
WEB: www.schlagelock.com

STEEL PRODUCTS
SCHLUTER
PHONE: 800–472–4588
WEB: www.schluter.com

SIGNAGE
ANCHOR SIGN, INC
2200 DISCHER STREET
CHARLESTON, SC 29405
BRAD FRAZIER
PHONE: 800–213–3331
DIRECT: 843–576–3287
EMAIL: BFrazier@AnchorSign.com

MIRROR ADHESIVE
PALMER PRODUCTS CORP.
PHONE: 800–431–6151
EMAIL: palmer@mirro–mastic.com

(2)

SITE MAP

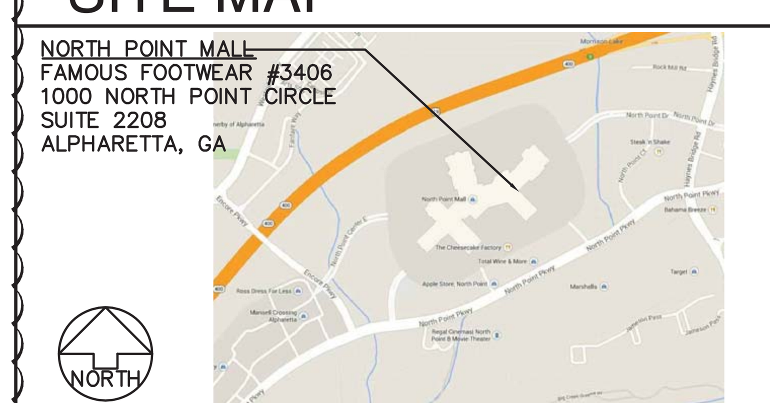

KEY PLAN

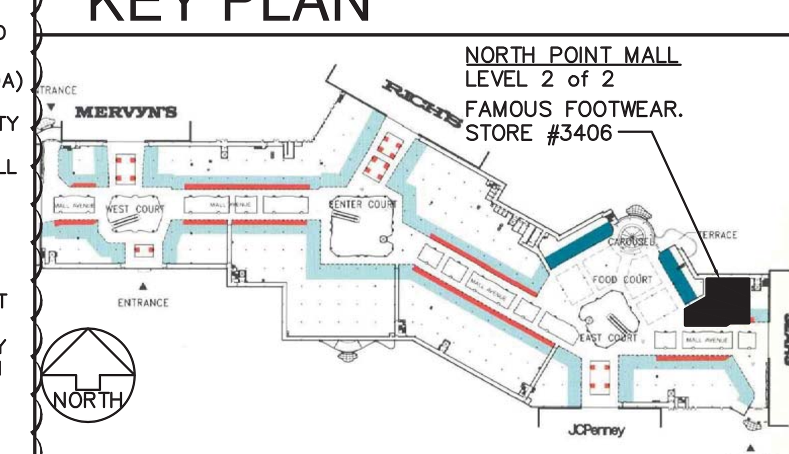

DRAWING INDEX

Sheet	Title	BID AND PERMIT ISSUANCE	Revision 1	Revision 2	Revision 3
A1.0	TITLE SHEET	09/15/14		09/26/14	
CC.0	COMCHECK			09/26/14	
D1.0	DEMOLITION PLAN	09/15/14		09/26/14	
A2.0	FLOOR PLAN	09/15/14	09/24/14	09/26/14	
A2.1	FIXTURE DETAILS	09/15/14			
A3.0	REFLECTED CEILING PLAN	09/15/14	09/24/14	09/26/14	
A4.0	FIXTURE PLAN	09/15/14			
A5.0	INTERIOR FINISH PLAN	09/15/14		09/26/14	
A6.0	STOREFRONT ELEVATION / PLAN	09/15/14	09/24/14	09/26/14	
A6.1	STOREFRONT DETAILS / SECTIONS	09/15/14	09/24/14	09/26/14	
A6.2	INTERIOR ELEVATIONS	09/15/14			
A7.0	CONSTRUCTION DETAILS	09/15/14			
M1.0	MECHANICAL PLAN	09/15/14		09/26/14	
M2.0	DETAILS AND SCHEDULES	09/15/14		09/26/14	
E1.0	POWER PLAN	09/15/14	09/24/14	09/26/14	
E2.0	DETAILS AND SCHEDULES	09/15/14		09/26/14	
E3.0	LIGHTING PLAN	09/15/14			
P1.0	PLUMBING PLAN	09/15/14		09/26/14	
SP1	SPECIFICATIONS	09/15/14			
SP2	SPECIFICATIONS	09/15/14			
SP3	SPECIFICATIONS	09/15/14			
SP4	SPECIFICATIONS	09/15/14			
SP5	SPECIFICATIONS	09/15/14			

BROWN SHOE COMPANY, INC.
8300 Maryland Ave.
Clayton, MO 63105
314/854-4000

BROWN SHOE COMPANY

Date	Issue
09/15/2014	BID & PERMIT
09/27/2014	(2) LANDLORD COMMENTS

TRICARICO®
Tricarico Architecture and Design PC
502 Valley Road Wayne, NJ 07470
T (973) 692-0222 F (973) 692-0223
www.tricarico.com

PROHIBITION ON REUSE: INFORMATION CONTAINED IN THESE DRAWINGS AND SPECIFICATIONS WAS PREPARED FOR USE ON THE SPECIFIC SITE INDICATED. USE OF THIS INFORMATION ON ANOTHER PROJECT IS PROHIBITED AND CONTRARY TO LAW UNLESS EXPRESSLY AUTHORIZED IN WRITING BY THE AUTHOR.

THESE DRAWINGS AND SPECIFICATIONS ARE AND SHALL REMAIN THE PROPERTY OF THE BROWN SHOE, INC. DISPLAY, REPRODUCTION, OR USE FOR ANY BUT THE SPECIFICALLY AGREED UPON PURPOSES, WITHOUT THE WRITTEN AUTHORIZATION OF BROWN SHOE, INC. IS STRICTLY PROHIBITED.

COPYRIGHT NOTICE: THESE DRAWINGS AND SPECIFICATIONS ARE SUBJECT TO COPYRIGHT PROTECTION AS AN "ARCHITECTURAL WORK" UNDER SEC. 102 OF THE COPYRIGHT ACT, 17 U.S.C. AS AMENDED DECEMBER 1990; KNOWN AS THE ARCHITECTURAL WORKS COPYRIGHT PROTECTION ACT OF 1990. THE PROTECTION INCLUDES, WITHOUT LIMITATION, THE OVERALL FORM, ARRANGEMENT, AND COMPOSITION OF SPACES AND ELEMENTS OF THE DESIGN.

FAMOUS footwear
STORE #3406
NORTH POINT MALL
1000 NORTH POINT CIR SUITE 2208
ALPHARETTA, GA 30022

DESIGNED BY:	BF
DRAWN BY:	MHA
CHECKED BY:	MW
DATE:	09/27/14
PROTO. VER.:	010413
PROJECT NO:	140341

TITLE SHEET

A1.0

COPYRIGHT © 2014 BY BROWN SHOE, INC. PROTOTYPE VERSION: 010413

COM*check* Software Version 3.9.4

Interior Lighting and Power Compliance Certificate

90.1 (2007) Standard

Section 1: Project Information

Project Type: **Alteration**
Project Title : Famous Footwear #3406

Construction Site:
North Point Mall
1000 North Point Cir. Suite 2208
Alpharetta, GA 30022

Owner/Agent:

Designer/Contractor:
Don Penn
Don Penn Consulting Engineers
635 Westport Parkway
Suite 300
Grapevine, TX 76051
817-251-8411

Section 2: Interior Lighting and Power Calculation

A Area Category	B Floor Area (ft2)	C Allowed Watts / ft2	D Allowed Watts (B x C)
Sales Area (Retail:Sales Area)	5042	1.7	8571
Allowance: Furniture, clothing, cosmetics highlighting / Fix. ID: D & DE	750(a)	2.6	1950(b)
Allowance: Furniture, clothing, cosmetics highlighting / Fix. ID: N	300(a)	2.6	780(b)
Stock Area (Warehouse:Medium/Bulky Material Storage)	540	0.9	486
Toilet Rooms (Common Space Types:Restrooms)	123	0.9	111
		Supplemental Allowed Watts(c) =	853
		Total Allowed Watts =	12751

(a) Area claimed may exceed total floor area when Retail Merchandise Highlighting allowance(s) are specified.
(b) Allowance is (B x C) or the actual wattage of the fixtures given in Section 2, whichever is less.
(c) Supplemental watts must be associated with retail merchandise highlighting fixtures.

Section 3: Interior Lighting Fixture Schedule

A Fixture ID : Description / Lamp / Wattage Per Lamp / Ballast	B Lamps/ Fixture	C # of Fixtures	D Fixture Watt.	E (C X D)
Sales Area (Retail:Sales Area 5042 sq.ft.)				
Linear Fluorescent 1: D & DE: 2' x 2': Other: Electronic:	3	86	120	10320
Linear Fluorescent 2: N: 10" x 4' Wall Wash: Other: Electronic:	2	22	46	1012
Track lighting 1: Q: Track Head: Wattage based on 12 feet of track	0	0	360	360
LED 1: B: 6" LED Recess Can: Other:	1	6	32	192
LED 2: C: Recess 3 HD LED: Other:	1	7	36	252
Stock Area (Warehouse:Medium/Bulky Material Storage 540 sq.ft.)				
Linear Fluorescent 3: D & DE: 2' x 4': Other: Electronic:	3	7	71	497
Toilet Rooms (Common Space Types:Restrooms 123 sq.ft.)				
Linear Fluorescent 4: GE: 1' x 4': Other: Electronic:	1	2	59	118
			Total Proposed Watts =	12751

Interior Lighting : Passes using retail merchandise highlighting supplemental watts.

Section 4: Compliance Statement

Compliance Statement: The proposed lighting design represented in this document is consistent with the building plans, specifications and other calculations submitted with this permit application. The proposed lighting system has been designed to meet the 90.1 (2007) Standard requirements in COM*check* Version 3.9.4 and to comply with the mandatory requirements in the Requirements Checklist.

Name - Title Signature Date

Section 5: Post Construction Compliance Statement

Record Drawings and Operating and Maintenance Manuals:

☐ 1. Construction documents with record drawings and operating and maintenance manuals provided to the owner.

Lighting Designer or Contractor Name Signature Date

COPYRIGHT © 2014 BY BROWN SHOE, INC. PROTOTYPE VERSION: 010413

BROWN SHOE COMPANY, INC.
8300 Maryland Ave.
Clayton, MO 63105
314/854-4000

BROWN SHOE COMPANY

09/15/2014 BID & PERMIT
09/27/2014 2 LANDLORD COMMENTS

635 Westport Parkway
Suite 300
Grapevine, Texas 76051
Phone: 817-251-8411
Fax: 817-251-8411

dpce
don penn ■ consulting engineer

PROHIBITION OF REUSE:
THIS DOCUMENT IS PROVIDED AS A TRADE EXHIBITS AND SPECIFICATIONS WHICH PROHIBIT THE USE OR RE-USE OF THIS DOCUMENT OR ITS CONTENTS ON OTHER PROJECTS OR EXTENSIONS TO THIS PROJECT IS PROHIBITED WITHOUT THE WRITTEN PERMISSION OF DON PENN CONSULTING ENGINEERS.

THE DRAWINGS AND SPECIFICATIONS AND OTHER DOCUMENTS DRAWN BY OR PROPERTY OF THE BROWN SHOE COMPANY, INC. ARE INSTRUMENTS OF SERVICE THROUGH EXECUTION OF THE PROJECT. THEY ARE PROPERTY OF THE BROWN SHOE COMPANY, INC. AND MAY NOT BE REPRODUCED, PUBLISHED OR USED IN WHOLE OR IN PART WITHOUT THE WRITTEN AUTHORIZATION OF BROWN SHOE COMPANY, INC.

COPYRIGHT NOTICE:
THE ARCHITECTURAL WORK DEPICTED IN THESE DRAWINGS ARE SUBJECT TO COPYRIGHT PROTECTION AS AN ARCHITECTURAL WORK UNDER THE ARCHITECTURAL WORKS PROTECTION ACT OF 1990, 17 U.S.C. §1 AND §102(a)(8) (DECEMBER 1990, PUBLIC LAW 101-650, 104 STAT. 5133). THE OWNER OF THIS DOCUMENT IS THE OWNER OF THE PROPERTY, THE TOTAL PLAN, ARRANGEMENT, AND DESIGN OF THE ARCHITECTURAL WORK.

FAMOUS footwear
STORE #3406
NORTH POINT MALL
1000 NORTH POINT CIR SUITE 2208
ALPHARETTA, GA 30022

DESIGNED BY: DP
DRAWN BY: MJ
CHECKED BY: DP
DATE: 09/27/14
PROTO. VER.: 010413
PROJECT NO: 140341

COMCHECK
2 CC.0

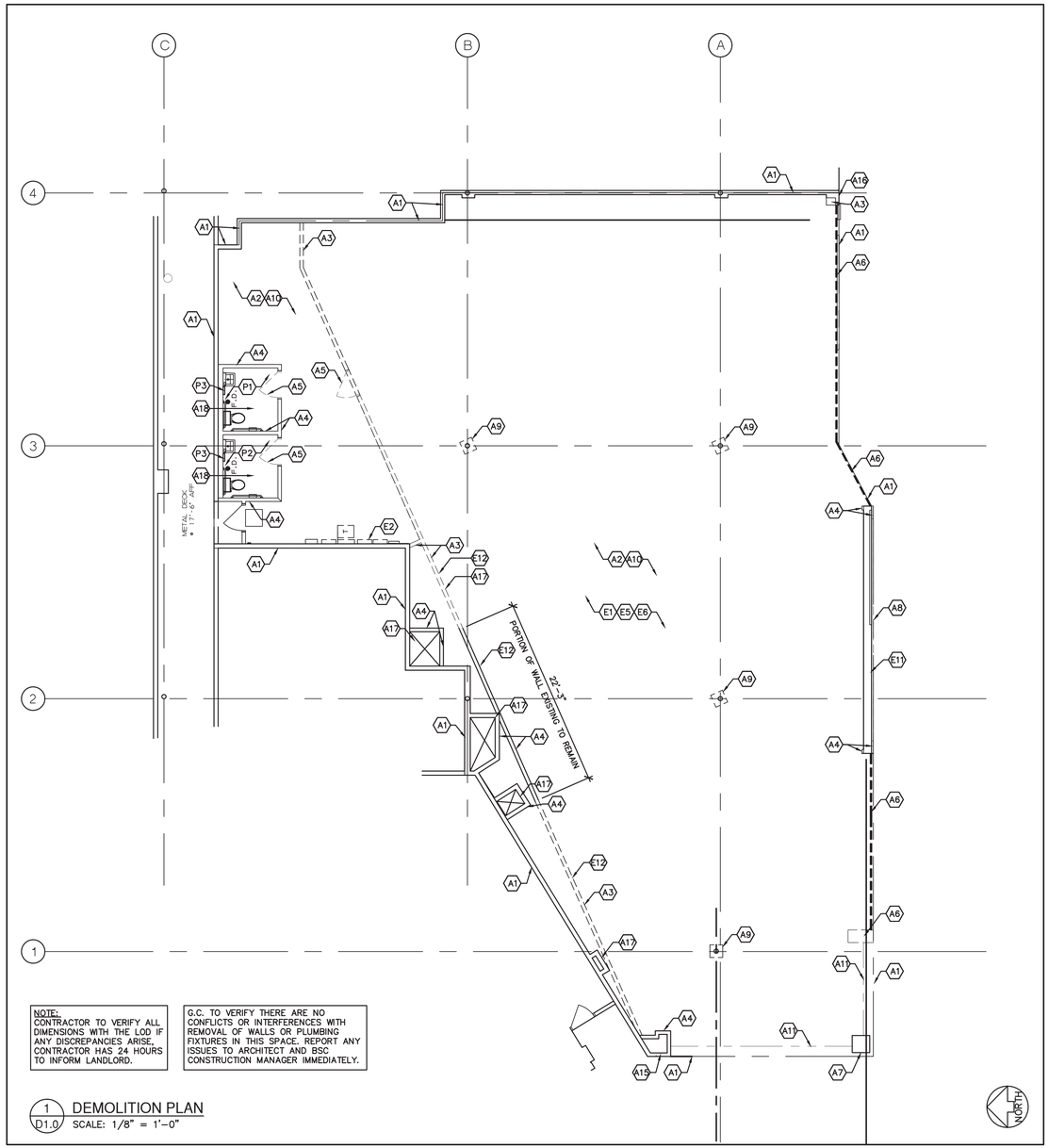

NOTE:
CONTRACTOR TO VERIFY ALL DIMENSIONS WITH THE LOD IF ANY DISCREPANCIES ARISE, CONTRACTOR HAS 24 HOURS TO INFORM LANDLORD.

G.C. TO VERIFY THERE ARE NO CONFLICTS OR INTERFERENCES WITH REMOVAL OF WALLS OR PLUMBING FIXTURES IN THIS SPACE. REPORT ANY ISSUES TO ARCHITECT AND BSC CONSTRUCTION MANAGER IMMEDIATELY.

1 DEMOLITION PLAN
D1.0 SCALE: 1/8" = 1'-0"

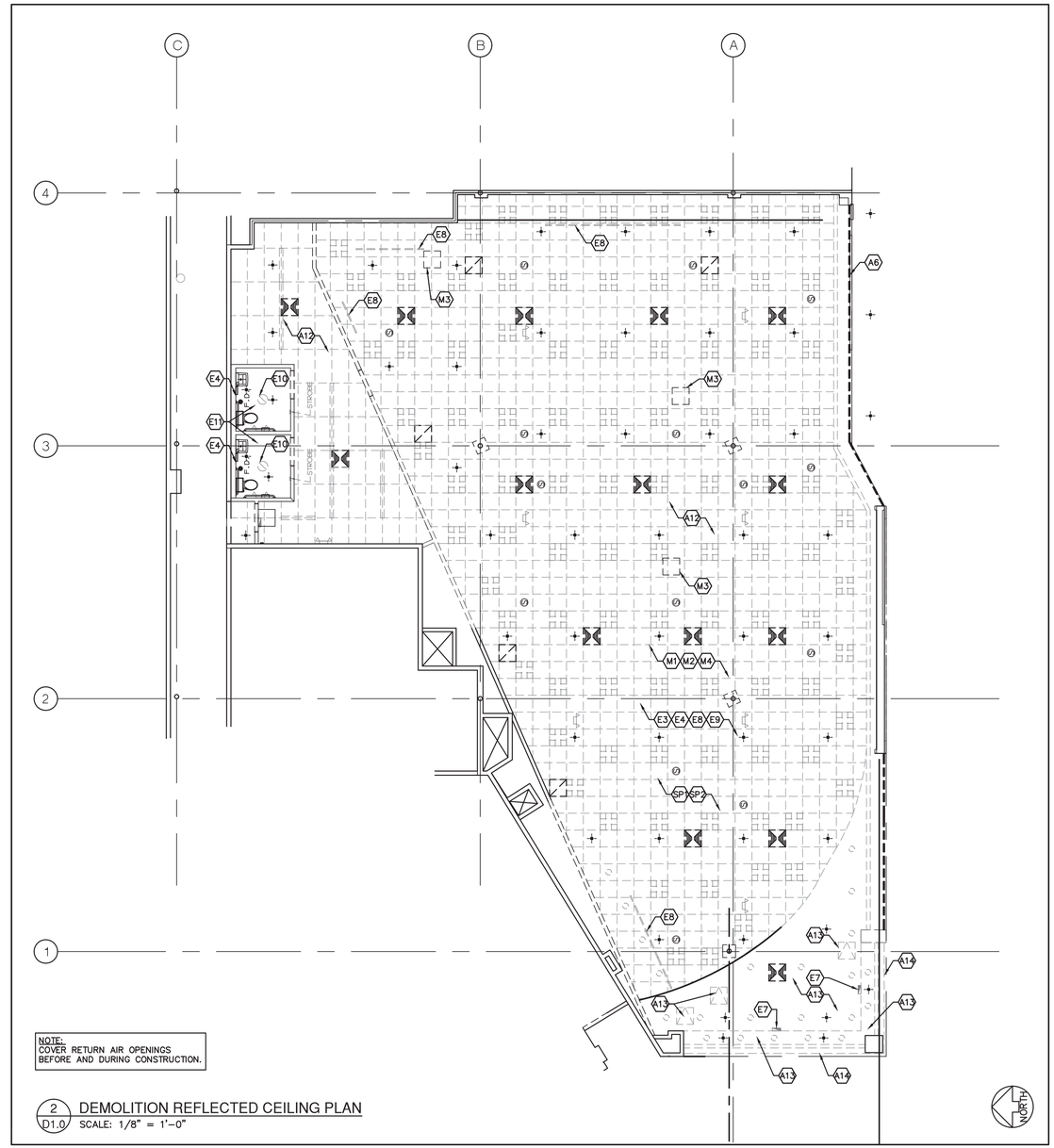

NOTE:
COVER RETURN AIR OPENINGS BEFORE AND DURING CONSTRUCTION.

2 DEMOLITION REFLECTED CEILING PLAN
D1.0 SCALE: 1/8" = 1'-0"

GENERAL DEMOLITION NOTES

1. GENERAL CONTRACTOR SHALL PROVIDE ALL DEMOLITION AS REQUIRED FOR THE CONSTRUCTION OF THE SPACES DETAILED IN THE ARCHITECTURAL PLANS.
2. ENTIRE SCOPE OF DEMOLITION WORK IS NOT NECESSARILY INDICATED IN THESE DRAWINGS. GENERAL CONTRACTOR SHALL VISIT THE JOBSITE TO DETERMINE QUANTITY OF MATERIALS AND COMPONENTS TO BE REMOVED TO CONSTRUCT THE PROJECT. ANY DISCREPANCIES BETWEEN THE DRAWINGS AND EXISTING CONDITIONS SHALL BE IMMEDIATELY BROUGHT TO THE ATTENTION OF THE BROWN SHOE CONSTRUCTION MANAGER. GENERAL CONTRACTOR TO COORDINATE A PRE-CONSTRUCTION MEETING WITH ON-SITE MANAGEMENT PRIOR TO BEGINNING ANY WORK.
3. REMOVE ALL DEBRIS ON A DAILY BASIS TO GENERAL CONTRACTOR PROVIDED CONTAINERS IN DESIGNATED AREAS. COORDINATE WITH LANDLORD'S SITE MANAGEMENT.
4. DEMOLITION OF ITEMS SHALL INCLUDE COMPLETE REMOVAL OF ANY ASSOCIATED ELECTRICAL, MECHANICAL, OR PLUMBING COMPONENTS. ABANDONED FLOOR PENETRATIONS SHALL BE PROPERLY SEALED IN ACCORDANCE WITH LANDLORD REQUIREMENTS PRIOR TO INSTALLATION OF NEW FLOORING MATERIALS.
5. COORDINATE ALL WORK IN DEMISING WALLS, ON ROOFS AND IN FLOORS WITH THE LANDLORD.
6. THE FIRE RATING AND STRUCTURAL INTEGRITY OF EXISTING FLOORS, DEMISING WALLS AND COLUMNS SHALL BE MAINTAINED DURING DEMOLITION. CONTRACTOR TO PATCH AND REPAIR THESE ASSEMBLIES AS REQUIRED. COORDINATE WITH THE LANDLORD.
7. VERIFY THE SCOPE OF DEMOLITION WORK TO DETERMINE IF ANY EXISTING EQUIPMENT IS TO REMAIN.
8. BARRICADES MUST BE COMPLETED IN ACCORDANCE WITH MALL CRITERIA. PROVIDE TEMPORARY CONSTRUCTION BARRICADE PRIOR TO COMMENCEMENT OF CONSTRUCTION, PER INSTRUCTION OF LOCAL GENERAL GROWTH AUTHORITY. DO NOT FASTEN TO MALL FINISH MATERIAL. SUBMIT BARRICADE GRAPHICS TO THE MALL G.M., FOR REVIEW AND APPROVAL PRIOR TO INSTALLATION. 2

DEMOLITION NOTES

- A1 TENANT LEASE LINE
- A2 REMOVE EXISTING FLOOR FINISHES THROUGHOUT THE PREMISES INCLUDING ADHESIVES, GROUT, TRANSITIONS, ETC. DOWN TO CONCRETE SLAB. PREPARE FLOOR SLAB TO MEET NEW FLOOR COVERING MANUFACTURER'S RECOMMENDATIONS.
- A3 REMOVE WALL ASSEMBLY INCLUDING GYP. BOARD, STUD FRAMING, BRACING, ETC. G.C. TO VERIFY THERE ARE NO CONFLICTS OR INTERFERENCES WITH REMOVAL OF WALLS AND BUILD-OUTS. REPORT ANY ISSUES TO ARCHITECT AND BSC CONSTRUCTION MANAGER IMMEDIATELY.
- A4 EXISTING WALL TO REMAIN. G.C. TO REMOVE EXISTING FINISHES AND BUMP-OUTS AS INDICATED. PATCH AND REPAIR AS REQUIRED FOR NEW FINISHES.
- A5 REMOVE EXISTING DOOR FRAME AND HARDWARE.
- A6 REMOVE EXISTING STOREFRONT SYSTEM, GYPSUM BOARD SOFFIT, AND ASSOCIATED FRAMING AND BRACING AS REQUIRED FOR NEW TENANT WALL. G.C. TO PROTECT ADJACENT MALL FINISHES AS REQUIRED.
- A7 EXISTING PIER TO REMAIN. EXISTING FINISHES TO BE REMOVED PATCH AND REPAIR AS REQUIRED FOR NEW FINISHES.
- A8 EXISTING STOREFRONT WALL TO REMAIN. EXISTING FINISHES TO BE REMOVED ON BOTH SIDES. PATCH AND REPAIR AS REQUIRED FOR NEW FINISHES.
- A9 EXISTING COLUMN ENCLOSURE TO BE REMOVED. G.C. TO MAINTAIN STRUCTURAL INTEGRITY AS REQUIRED DURING DEMOLITION AND CONSTRUCTION.
- A10 REMOVE ALL EXISTING SALES AREA AND STOCK AREA FIXTURES, SHELVING, MIRRORS, MILLWORK, SLATWALL AND ASSOCIATED FASTENER BRACKETS AND SUPPORTS. G.C. TO PATCH AND REPAIR EXISTING ADJACENT SURFACES AS REQUIRED FOR NEW FINISHES.
- A11 EXISTING OVERHEAD ROLLING GRILLE SYSTEM SUPPORTS AND ANY ASSOCIATED BRACING AND FRAMING TO BE COMPLETELY REMOVED.
- A12 EXISTING A.C.T. AND GYPSUM BOARD CEILINGS TO BE REMOVED AS INDICATED INCLUDING FRAMING, GRID WORK, ASSOCIATED SUPPORT WIRES, AND BRACING.
- A13 EXISTING ENTRY SOFFIT AND ACCESS PANELS TO BE REMOVED INCLUDING ASSOCIATED FRAMING AND BRACING.
- A14 EXISTING SIGNAGE, SOFFIT, LIGHTING AND POWER TO BE REMOVED. REMOVE RELATED UNUSED CONDUIT AND CONDUCTORS. PROTECT ADJACENT MALL FINISHES DURING DEMOLITION AND CONSTRUCTION.
- A15 EXISTING MALL NEUTRAL PIER AND 3/4" REVEAL TO REMAIN. G.C. TO PRESERVE AND PROTECT DURING DEMOLITION AND CONSTRUCTION.
- A16 EXISTING 3/4" REVEAL AND ADJACENT TENANT FINISHES TO REMAIN. G.C. TO PRESERVE AND PROTECT DURING DEMOLITION AND CONSTRUCTION.
- A17 G.C.TO PERFORM EXPLORATORY DEMOLITION AS REQUIRED TO CONFIRM EXACT LOCATION AND DIMENSION FOR EXISTING MALL CHASES. NOTIFY B.S.C. AND ARCHITECT OF ANY DISCREPANCIES IMMEDIATELY.
- A18 EXISTING TOILET ROOM FLOORING TO REMAIN. CLEAN, PATCH, AND REPAIR AS REQUIRED.
- E1 REMOVE RECEPTACLES, SWITCHES, CONDUITS, ETC., BACK TO THE NEXT POINT OF USE WHICH ARE NOT TO BE REUSED AND RELOCATED AND ARE WITHIN WALLS TO BE DEMOLISHED.
- E2 REUSE EXISTING ELECTRICAL EQUIPMENT. EXTEND FEEDERS TO NEW LOCATION AS INDICATED ON ELECTRICAL DRAWINGS.
- E3 REMOVE LIGHT FIXTURES (LAY-IN, RECESSED AND SURFACE MOUNTED)AND CONDUCTORS BACK TO POINT OF ORIGIN.
- E4 REMOVE EXISTING EMERGENCY LIGHTING PACKS (CEILING AND WALL MOUNTED) AND RELATED UNUSED CONDUIT AND CONDUCTORS BACK TO POINT OF ORIGIN. PATCH AND REPAIR WALL FINISHES AS REQUIRED.
- E5 REMOVE UNUSED CONDUIT AND CONDUCTORS IN WALLS, ON WALLS, AND IN CEILING CAVITIES.
- E6 CONVENIENCE RECEPTACLES TO REMAIN ON EXISTING WALLS THAT WILL REMAIN INTACT, UNLESS OTHERWISE INDICATED ON THIS PLAN. RECEPTACLES MAY BE RELOCATED OR RE-CURICITED. REFER TO ELEVATIONS AND ELECTRICAL DRAWINGS FOR MORE INFORMATION.
- E7 REMOVE AND DISCONNECT ILLUMINATED EXIT SIGNS (CEILING AND WALL MOUNTED). REMOVE RELATED UNUSED CONDUIT AND CONDUCTORS.
- E8 REMOVE ALL TRACKS AND TRACK HEADS.
- E9 REMOVE ALL CEILING MOUNTED MONITORS, SPEAKERS, WIRING AND ASSOCIATED CONDUIT AND CONDUCTORS.
- E10 EXISTING LIGHTING AND POWER TO BE REMOVED. REMOVE RELATED UNUSED CONDUIT AND CONDUCTORS. PATCH AND REPAIR AS REQUIRED FOR NEW TENANT FINISHES.
- E11 EXISTING COMBO LIGHT / EXHAUST FAN TO BE REMOVED. PATCH AND REPAIR AS REQUIRED FOR NEW EQUIPMENT AND FINISHES.
- E12 EXISTING SURFACE MOUNTED LIGHT BOXES, RELATED UNUSED CONDUIT AND CONDUCTORS TO BE REMOVED. PATCH AND REPAIR ADJACENT EXISTING TO REMAIN SURFACES AS REQUIRED TO PREPARE FOR NEW TENANT FINISHES.
- M1 DISCONNECT AND MODIFY EXISTING DUCTWORK TO ACCOMMODATE NEW LIGHTING LAYOUT AND CEILING. COORDINATE ALL EQUIPMENT TO REMAIN WITH HVAC SUB CONTRACTOR.
- M2 REMOVE ALL DIFFUSERS AND RETURNS.
- M3 REMOVE EXISTING VAV UNITS. SEE MECHANICAL SHEETS FOR MORE INFORMATION.
- M4 EXISTING THERMOSTAT TO BE REMOVED.
- P1 EXISTING TOILET ROOM FIXTURES TO REMAIN/REUSED.
- P2 EXISTING TOILET ROOM FIXTURES TO BE REMOVED/REPLACED AS REQUIRED.
- P3 EXISTING INSTAFLOW HOT WATER HEATER TO BE REMOVED.
- SP1 SPRINKLER SYSTEM TO BE MODIFIED AS NECESSARY FOR NEW LAYOUT. G.C. TO PROVIDE SPRINKLER DRAWINGS FROM LICENSED ENGINEER FOR REVIEW AND APPROVAL PRIOR TO CONSTRUCTION AND INSTALLATION. SPRINKLER WORK UNDER SEPARATE PERMIT.
- SP2 EXISTING SPRINKLER MAIN TO REMAIN.

WALL TYPE LEGEND

- EXISTING WALL CONSTRUCTION TO REMAIN
- EXISTING WALL CONSTRUCTION TO BE REMOVED

CEILING DEMOLITION LEGEND

- EXISTING A.C.T. CEILING TO BE REMOVED
- EXISTING WALL CONSTRUCTION TO BE REMOVED
- EXISTING SPRINKLER HEAD TO BE REMOVED/MODIFIED AS REQUIRED
- EXISTING LIGHT FIXTURES TO BE REMOVED
- EXISTING SPEAKERS TO BE REMOVED
- EXISTING ACCESS PANEL TO BE REMOVED

BROWN SHOE COMPANY, INC.
8300 Maryland Ave.
Clayton, MO 63105
314/854-4000
BROWN SHOE COMPANY

09/15/2014	BID & PERMIT
09/26/2014	2 LANDLORD COMMENTS

TRICARICO®
Tricarico Architecture and Design PC
502 Valley Road Wayne, NJ 07470
T (973) 692-0222 F (973) 692-0223
www.tricarico.com

DISSEMINATION OR REUSE:
THESE DRAWINGS AND SPECIFICATIONS AS INSTRUMENTS OF SERVICE ARE AND SHALL REMAIN THE PROPERTY OF THE BROWN SHOE COMPANY, INC. THE REPRODUCTION, ALTERATION OR USE FOR ANY PURPOSE OTHER THAN THOSE AUTHORIZED BY THE BROWN SHOE COMPANY, INC. IS FORBIDDEN WITHOUT THE WRITTEN APPROPRIATION OF BROWN SHOE COMPANY, INC.

COPYRIGHT NOTICE:
THESE DRAWINGS AND SPECIFICATIONS ARE SUBJECT TO COPYRIGHT PROTECTION AS AN "ARCHITECTURAL WORK" UNDER SECTION 102 OF THE COPYRIGHT ACT, 17 U.S.C. AS AMENDED DECEMBER 1990. SECTION 120 OF 17 U.S.C. AS AMENDED DECEMBER 1990 PROVIDES, INTER ALIA, THAT THE OWNER OF A COPY OF AN ARCHITECTURAL WORK MAY MAKE OR AUTHORIZE THE MAKING OF PICTURES, THE PUBLIC DISPLAY, DISTRIBUTION, AND OTHER USES OF PLANS, SPECIFICATIONS, AND DESIGNS.

FAMOUS footwear
STORE #3406
NORTH POINT MALL
1000 NORTH POINT CIR SUITE 2208
ALPHARETTA, GA 30022

DESIGNED BY:	BF
DRAWN BY:	MHA
CHECKED BY:	MW
DATE:	09/26/14
PROTO. VER.:	010413
PROJECT NO:	140341

DEMOLITION PLAN

D1.0

COPYRIGHT © 2014 BY BROWN SHOE, INC. PROTOTYPE VERSION: 010413

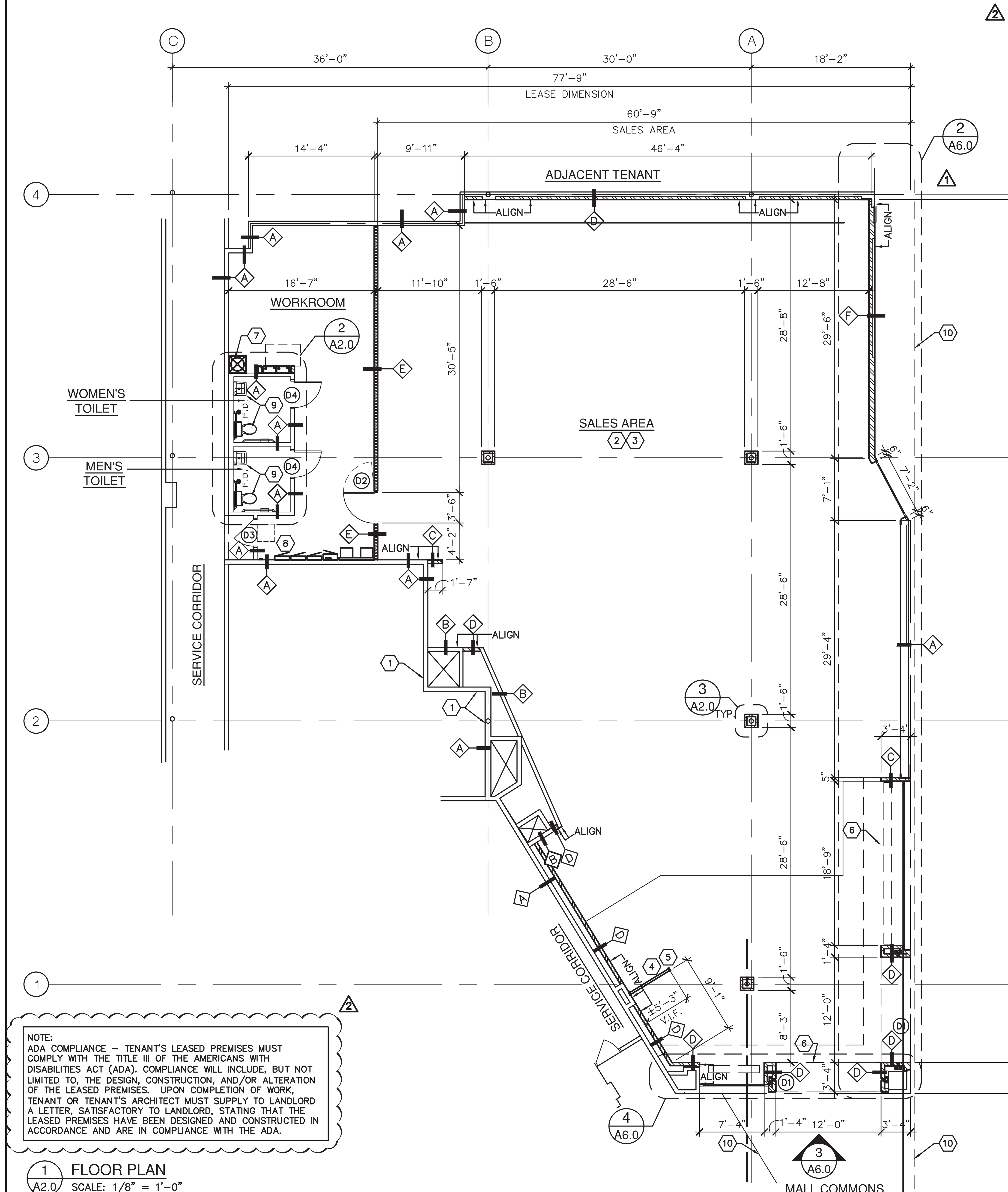

NOTE:
G.C. TO FIELD VERIFY ALL DIMENSIONS AND REPORT ANY DISCREPANCIES TO THE MALL OPERATIONS MANAGER AND TENANT'S ARCHITECT.

NOTE:
IT IS THE RESPONSIBILITY OF THE TENANT'S ARCHITECT TO FIELD VERIFY DIMENSIONS, UTILITY LOCATIONS AND CONDITIONS PRIOR TO AND DURING CONSTRUCTION.

NOTE:
ADA COMPLIANCE – TENANT'S LEASED PREMISES MUST COMPLY WITH THE TITLE III OF THE AMERICANS WITH DISABILITIES ACT (ADA). COMPLIANCE WILL INCLUDE, BUT NOT LIMITED TO, THE DESIGN, CONSTRUCTION, AND/OR ALTERATION OF THE LEASED PREMISES. UPON COMPLETION OF WORK, TENANT OR TENANT'S ARCHITECT MUST SUPPLY TO LANDLORD A LETTER, SATISFACTORY TO LANDLORD, STATING THAT THE LEASED PREMISES HAVE BEEN DESIGNED AND CONSTRUCTED IN ACCORDANCE AND ARE IN COMPLIANCE WITH THE ADA.

1 / A2.0 FLOOR PLAN
SCALE: 1/8" = 1'–0"

CONSTRUCTION GENERAL NOTES

1. DIMENSIONS ARE TO FINISH SURFACES UNLESS NOTED OTHERWISE.
2. REPORT ALL SHELL BUILDING LATENT DEFECTS TO THE BROWN SHOE CONSTRUCTION MANAGER, IMMEDIATELY UPON DISCOVERY.
3. THE G.C. IS RESPONSIBLE FOR CONFIRMING OVERALL DIMENSIONS AND STRUCTURAL CONDITIONS PRIOR TO BEGINNING WORK. ANY DISCREPANCIES OR PROBLEMATIC CONDITIONS SHALL BE BROUGHT TO THE IMMEDIATE ATTENTION OF THE BROWN SHOE CONSTRUCTION MANAGER.
4. ANY SURFACES, FINISHES, EQUIPMENT, ETC. INDICATED AS "EXISTING TO REMAIN" OR "RELOCATED" SHALL BE REFURBISHED OR REPAIRED AS NECESSARY TO LIKE NEW CONDITION.
5. G.C. SHALL VERIFY THE FOLLOWING DIMENSIONS AND REPORT ANY DISCREPANCIES OR DESIGN CONFLICTS TO THE BROWN SHOE CONSTRUCTION MANAGER: OVERALL SALES FLOOR WIDTH AND DEPTH, COLUMN LOCATIONS AND SIZES, STOREFRONT TILED ENTRY LOCATION, WORKROOM WALL LOCATION, AND CEILING HEIGHTS.
6. ENSURE THAT REAR EGRESS DOOR DISCHARGES DIRECTLY TO GRADE OR LOADING PLATFORM WITH AREA OF RESCUE.
7. ENSURE THAT ALL COLUMNS ARE BOXED IN OR FURRED OUT THROUGHOUT LEASED SPACE. (REFER TO DETAIL 3/A2.0)
8. IF SLAT WALL IS EXISTING AND ADDITIONAL WORK ABOVE NORMAL PATCH AND REPAIR IS REQUIRED ONCE REMOVED, G.C. TO INSTALL 1–LAYER 1/4" TYPE X GYP. BOARD.

CONSTRUCTION KEYNOTES

1. LEASE LINE, FIELD VERIFY ALL LEASE DIMENSIONS.
2. PREPARE CONCRETE SLAB TO MEET FLOOR–COVERING MANUFACTURER'S RECOMMENDATIONS. FLOOR SLAB SHALL BE LEVEL TO WITHIN 1/2" OF SLOPE OVER THE ENTIRE LEASABLE AREA.
3. SALES AREA WALLS ARE COVERED FROM FLOOR TO CEILING WITH DISPLAY FIXTURES. WALLS MUST BE KEPT FREE OF THERMOSTATS, STROBES, ALARMS, ETC. CEILING MOUNTED DEVICES ARE ACCEPTABLE.
4. CHANNEL EXISTING FLOOR SLAB AS REQUIRED FOR INSTALLATION OF TWO 1" CONDUITS FOR CASHWRAP POWER AND COMMUNICATIONS. REPAIR FLOOR SLAB AS REQUIRED.
5. TWO 1" CONDUITS FOR CASHWRAP POWER AND COMMUNICATIONS TO BE TERMINATED HORIZONTALLY AT SLAB MOUNTED J–BOXES CENTERED WHERE DIMENSIONED ON PLAN. VERIFY LOCATION WITH BROWN SHOE PRIOR TO INSTALLATION. REFER TO SHEET E1.0 FOR ADDITIONAL INFORMATION (DETAIL 2/E1.0).
6. LINE OF NEW GYP. BD. SOFFIT ABOVE. REFER TO A3.0 FOR MORE INFORMATION.
7. NEW MOP SINK WITH 6 GALLON HOT WATER HEATER ABOVE. REFER TO DETAIL 2/A7.0 FOR MORE INFORMATION.
8. EXISTING RELOCATED ELECTRICAL EQUIPMENT. REFER TO ELECTRICAL SHEETS FOR MORE INFORMATION.
9. G.C. TO CLEAN, PATCH, AND PLUMBING FIXTURES TO "LIKE NEW" CONDITION, IF POSSIBLE. REPLACE TOILET ROOM FIXTURES AS REQUIRED, COORDINATE WITH B.S.C. PRIOR TO REMOVAL.
10. LINE OF EXISTING MALL SOFFIT ABOVE. G.C. TO PRESERVE DURING CONSTRUCTION.

PLUMBING FIXTURE AND ACCESSORY TAGS

1. EXISTING TOILET: MOUNTED 18" O.C. FROM SIDE WALL WITH FLUSH CONTROL MOUNTED AT 44" A.F.F. MAX. AT THE SIDE OF THE FIXTURE WITH THE GREATEST CLEAR APPROACH. SEAT HEIGHT SHALL BE 17"–19" AFF. FIXTURE SHALL HAVE A 56" X 60" CLEAR AREA AS INDICATED.
2. EXISTING SINK: MOUNTED 15" O.C. FROM SIDE WALL WITH ACCESSIBLE CONTROLS AND INSULATIVE WRAP AT ALL SUPPLY AND WASTE PIPING. RIM OF SINK TO BE AT 34" A.F.F. MAX. WITH 29" A.F.F. MIN. CLEARANCE BELOW APRON. PROVIDE A 30" X 48" CLEAR AREA AS INDICATED.
3. EXISTING MIRROR: 24" x 36" MIRROR WITH ACCESSIBLE TILTING CAPABILITY CENTERED ABOVE SINK AND MOUNTED AT 40" A.F.F. MAX. TO BOTTOM OF REFLECTIVE SURFACE. BOBRICK B–293 2436 OR APPROVED EQUAL.
4. EXISTING GRAB BARS: SIZES AND LOCATIONS AS INDICATED, MOUNTED AT 33"–36" A.F.F. TO CENTER OF HORIZONTAL BARS AND AT 40" A.F.F. TO BOTTOM OF 18" TALL VERTICAL BAR, AND CAPABLE OF SUPPORTING A 250 LB. POINT LOAD. GRIPPING SURFACE SHALL BE 1 1/4"–1 1/2" DIAMETER.
5. EXISTING TOILET TISSUE DISPENSER: KIMBERLY–CLARK KCI–09554L DBL. ROLL REFLECTINS, MTD. AT THE SIDE WALL 7"–9" O.C. IN FRONT OF THE TOILET WITH THE OUTLET OF THE DISPENSER AT 19"–48" A.F.F.
6. NEW PAPER TOWEL DISPENSER: KIMBERLY–CLARK KCI–09765, MOUNTED ADJACENT TO THE MIRROR WITH THE OUTLET OF THE DISPENSER AT 48" A.F.F. MAX.
7. NEW SOAP DISPENSER: KIMBERLY–CLARK KCI–91180L BLACK, MOUNTED ADJACENT TO THE MIRROR WITH THE OUTLET OF THE DISPENSER AT 48" A.F.F. MAX.
8. NEW MOP SINK: FLOOR MOUNTED WITH CONTROLS MOUNTED AT 36" A.F.F., PROVIDE MOP HANGER AS SPECIFIED ON PLUMBING DRAWINGS.
9. NEW DRINKING FOUNTAINS: (NON–REFRIDGERATED) MOUNT STANDARD UNIT WITH RIM AT 40" A.F.F. AND ACCESSORY APRON OR DETECTABLE WARNING AT 27" A.F.F. MAX. MOUNT ACCESSIBLE UNIT WITH RIM AT 34" A.F.F. PROVIDE A 30" X 48" CLEAR AREA CENTERED ON LOWER UNIT AS INDICATED.
10. NEW ACCESSIBLE SIGNAGE: WALL MOUNTED ADJACENT TO LATCH SIDE OF DOOR WITH CENTER AT 60" A.F.F., SIGNAGE TO COMPLY WITH CABO / ANSI A117.1 RAISED CHARACTERS WITH PICTOGRAMS AND GRADE 2 BRAILLE.
11. NEW WATER HEATER TO BE LOCATED ON PLATFORM ABOVE CEILING OVER THE MOP SINK. SEE PLUMBING SHEET AND SHEET A7.0 FOR ADDITIONAL INFORMATION. ROUTE OVERFLOW PAN DRAIN TO MOP SINK, CONCEAL WITHIN WALL.
12. NOT USED.
13. EXISTING FLOOR DRAIN.

TOILET ROOM FIXTURES AND ACCESSORIES SHALL CONFORM TO THE MOST CURRENT VERSION OF THE AMERICANS WITH DISABILITIES ACT AND / OR ALL RELATED BUILDING CODES. SEE PLUMBING SHEET FOR FIXTURE SPECIFICATIONS.

ITEMS 5, 6, AND 7 ARE PROVIDED TO THE G.C. AT NO COST. G.C. TO CONTACT STAPLES ADVANTAGE AT START OF CONSTRUCTION TO ORDER. REFER TO SHEET A1.0 FOR VENDOR CONTACT INFORMATION.

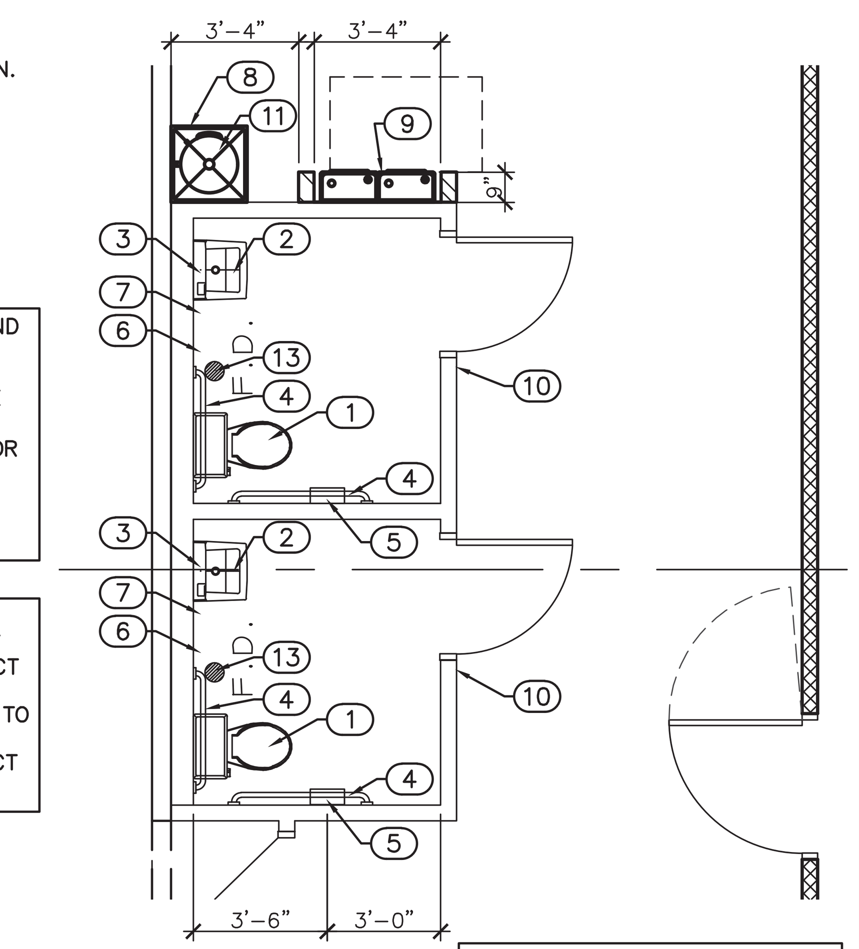

G.C. TO PROVIDE ADEQUATE FIRE RETARDANT TREATED BLOCKING AT ALL FIXTURE AND EQUIPMENT MOUNTING LOCATIONS

2 / A2.0 ENLARGED TOILET ROOM PLAN
SCALE: 1/4" = 1'–0"

WALLTYPE LEGEND

- NEW WALL CONSTRUCTION
- NEW SMOKE WALL CONSTRUCTION
- EXISTING WALL CONSTRUCTION TO REMAIN
- WALL CONSTRUCTION TYPE, REFER TO WALLTYPE SCHEDULE ON THIS SHEET

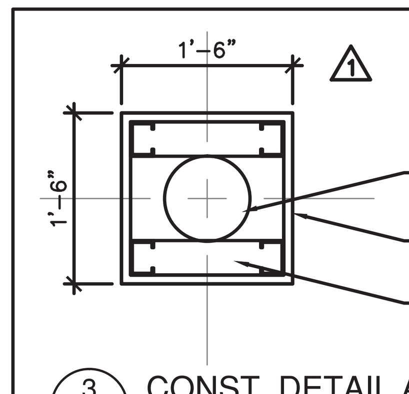

NOTE: THIS DETAIL IS A TYPICAL DETAIL TO INDICATE CONSTRUCTION METHOD AND MATERIALS ONLY. REFER TO PLAN FOR ACTUAL PLACEMENT OF ENCLOSURE RELATIVE TO STRUCTURAL COLUMN.

- EXISTING STRUCTURAL COLUMN, SEE PLAN FOR ACTUAL LOCATION AND ORIENTATION WITHIN ENCLOSURE
- NEW MIRROR ON EACH FACE OF SALES AREA COLUMN, TYPICAL. REFER TO DETAIL ON SHEET A7.0.
- 2 1/2" 20 GA. METAL STUDS WITH 5/8" GYPSUM BOARD FROM FLOOR TO 6" ABOVE CLG.

3 / A2.0 CONST. DETAIL AT COLUMN ENCLOSURES
SCALE: NOT TO SCALE

DOOR AND HARDWARE SCHEDULE

		Door: Quantity	Width	Height	Material	Frame: Material	Rating	Lockset	Closer	Hinges	Kickplate	Misc.	Notes
D1	Storefront grille	2	12'–0"	10'–0"	Aluminum	Aluminum	C	D	– (△1)	–	–	Z1	This Door Is To Remain Open During Occupancy
D2	Workroom	1	3'–6"	7'–0"	18 GA. Hollow Mtl	Knockdown Mtl	D	E	J	L	M	Q,R,T,Y	Kickplate M at both sides
D3	Rear Exit (Ex'g)	1	3'–0"	7'–0"	16 GA. Hollow Mtl	Welded Metal	A	G	K	L	M	P,U,V,W	
D4	Toilet Room	2	3'–0"	7'–0"	18 GA. Hollow Mtl	Knockdown Mtl	C	F	J	L	M	Q,S	V.I.F. New doors in ex'g openings

General Door Schedule Notes:

- –Refer to sheet A1.0 for door hardware vendor/ supplier contact information.
- –Front and rear doors to remain locked at all times during construction.
- –Exterior door interchangeable construction cores to be removed at turnover.
- –Mount door hardware 36"–48" AFF per code.
- –Paint all doors and frames to match adjacent wall surfaces. Refer to sheet A5.0.
- –Field verify the condition and proper operation of all "existing to remain" doors and hardware.
- –Storefront doors and hardware to match landlord system specification.

RATING
- (A) 45 Minute Rating Required
- (B) ~~1 Hour Rating Required~~
- (C) No Rating Required
- (D) Smoke Rated

Locksets
- (D) "Ilco" 7–pin housing mortise / rim as required with "Ilco" #207–L–26D Interchangeable core
- (E) "Schlage" Passage Set #AL10S or approved equal
- (F) "Schlage" Privacy Set #AL40S or approved equal.
- (G) "Securitech" #TEL–220 Trident 3 point locking device w/hardware alarm and "Ilco" 7 pin housing and "Ilco" #207–L–26D interchangeable core.
- (H) SIMPLEX 5000 – Push Button Cylindrical 5021 Satin Chrome 26D (626) w/ Interior lever

Closers
- (J) "LCN" #4031 Series Closer or approved equal
- (K) "LCN" #4040 Series Closer with "Hold Open" Feature or approved equal

Hinges
- (L) 1.5 Pair Standard Commercial Grade Ball Bearing Hinges – NRP Non–removable pins

MISC. HARDWARE – cont.
- (M) HD aluminum kickplate – full width x 34" at push side of door– long lead time item.
- (N) ~~Weather stripping~~
- (P) Door viewer at 60" aff
- (Q) HD wall mounted door stop
- (R) Smoke Gasket
- (S) Accessible signage per code, refer to enlarged toilet room details for more info.
- (T) Door Sweep
- (U) Neoprene self–adhesive continuous weather seal strips at jambs and head. Door bottom sweep seal with nylon brush or approved equal.
- (V) Blank plates replacing previous hdwr.
- (W) Tenant name on rear door, refer to detail on sheet A6.0.
- (X) ~~International Symbol of Accessibility and door buzzer, refer to detail for more info.~~
- (Y) LCN #4031 closer to be templated for 180° door swing installation
- (Z) ~~Code compliant system compatible with door having single release that will control upper and lower flush bolts of both doors.~~
- (Z1) Storefront Grile to be motorized Cornell ESG10 (v(9), or equal, with clear anodized finish. Provide thumb turn on inside with key lock on mall side. Refer to specifications.

WALL TYPE SCHEDULE

1. NEW 5/8" TYPE "X" GYPSUM BOARD TO 6" ABOVE CEILING
2. NEW 5/8" TYPE "X" GYPSUM BOARD TO DECK ABOVE
3. NEW 3 5/8" METAL STUDS AT 16" O.C. TO 6" ABOVE CEILING
4. EXISTING METAL STUDS
5. NEW 3 5/8" 18 GAUGE METAL STUDS AT 16" O.C. TO DECK ABOVE
6. EXISTING GYPSUM BOARD
7. TAPE AND CAULK AS REQ'D TO ACHIEVE CODE REQUIRED SMOKE RATING.
8. NEW 6" METAL STUDS AT 16" O.C. TO 6" ABOVE CEILING
9. 3/4" F.R.T.W PLYWOOD

General Wall Type Schedule Notes:
- –Coordinate all connections and methods of attachment to building structure and deck above with a landlord representative.
- –Maintain applicable fire ratings of existing walls which are to remain. Correct any known deficiencies.
- –Refer to additional framing and connection details on this page.
- –All walls are to have adequate lateral support bracing, refer to wall framing detail, sheet A7.0.
- –Provide FRT plywood blocking at all toilet room equipment and accessory mounting locations.
- –Penetrations of any fire rated partitions shall be sealed as required by code to ensure the rating of the wall assembly is maintained.

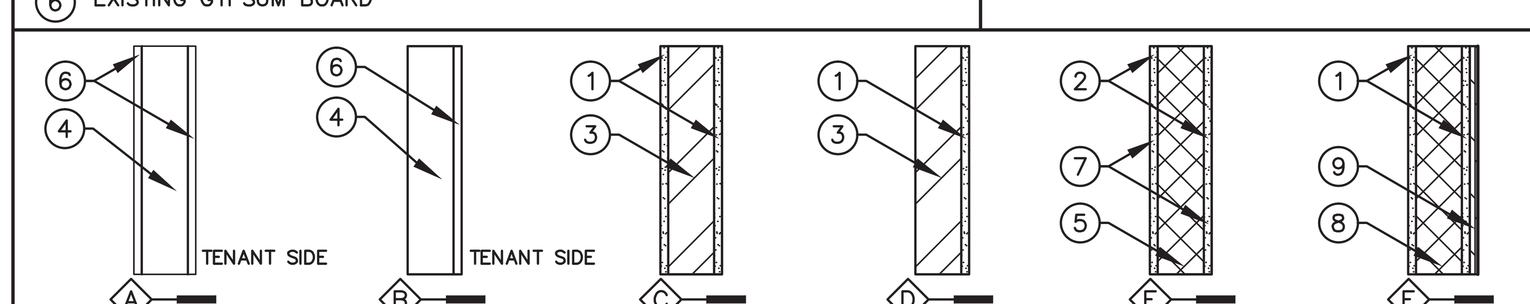

A: EX'G WALL MAINTAIN FIRE RATING WHERE EXISTING
B: EX'G INTERIOR WALL
C: NEW INTERIOR WALL
D: NEW FURRED OUT WALL
E: SMOKE RATED WALL
F: NEW INTERIOR WALL

BROWN SHOE COMPANY, INC.
8300 Maryland Ave.
Clayton, MO 63105
314/854-4000
BROWN SHOE COMPANY

09/15/2014	BID & PERMIT
09/26/2014	△2 LANDLORD COMMENTS

TRICARICO®
Tricarico Architecture and Design PC
502 Valley Road Wayne, NJ 07470
T (973) 692-0222 F (973) 692-0223
www.tricarico.com

PROHIBITION ON REUSE: INFORMATION CONTAINED IN THESE DRAWINGS AND SPECIFICATIONS WAS PREPARED FOR USE ON THE SPECIFIC SITE INDICATED. USE OF THIS INFORMATION ON ANOTHER PROJECT IS PROHIBITED AND CONTRARY TO LAW UNLESS EXPRESSLY AUTHORIZED IN WRITING BY THE AUTHOR.
THESE DRAWINGS AND SPECIFICATIONS ARE AND SHALL REMAIN THE PROPERTY OF THE BROWN SHOE, INC. DISPLAY, REPRODUCTION, OR USE FOR ANY BUT THE SPECIFICALLY AGREED UPON PURPOSES, WITHOUT THE WRITTEN AUTHORIZATION OF BROWN SHOE, INC. IS STRICTLY PROHIBITED.
COPYRIGHT NOTICE: THESE DRAWINGS AND SPECIFICATIONS ARE SUBJECT TO COPYRIGHT PROTECTION AS AN "ARCHITECTURAL WORK" UNDER SEC. 102 OF THE COPYRIGHT ACT, 17 U.S.C. AS AMENDED DECEMBER 1990; KNOWN AS THE ARCHITECTURAL WORKS COPYRIGHT PROTECTION ACT OF 1990. THE PROTECTION INCLUDES, WITHOUT LIMITATION, THE OVERALL FORM, ARRANGEMENT, AND COMPOSITION OF SPACES AND ELEMENTS OF THE DESIGN.

FAMOUS footwear
STORE #3406
NORTH POINT MALL
1000 NORTH POINT CIR SUITE 2208
ALPHARETTA, GA 30022

DESIGNED BY:	BF
DRAWN BY:	MHA
CHECKED BY:	MW
DATE:	09/26/14
PROTO. VER.:	010413
PROJECT NO:	140341

FLOOR PLAN
A2.0

COPYRIGHT ©2014 BY BROWN SHOE, INC. PROTOTYPE VERSION: 010413

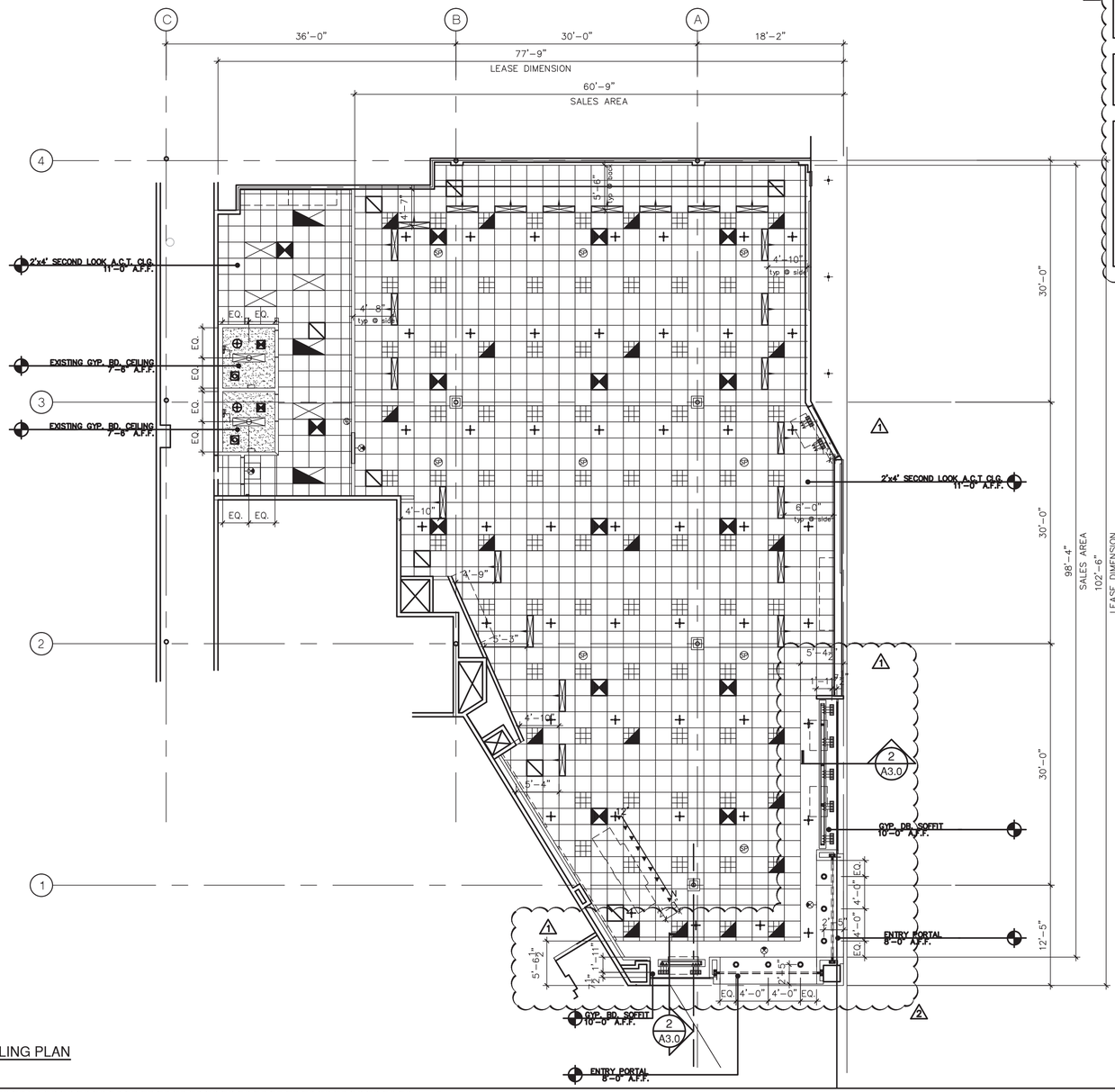

1 A3.0 REFLECTED CEILING PLAN
SCALE: 1/8" = 1'-0"

NOTE:
G.C. TO VERIFY THAT EXIT SIGN AND EMERGENCY LIGHTING ARE NOT VISIBLE FROM THE MALL VIEW.

NOTE:
WOOD BLOCKING, DECKING AND FRAMING IS ALLOWED ONLY BELOW THE CEILING LINE AND ONLY IF IT IS MILL STAMPED FIRE RETARDANT.

NOTE:
TENANTS ARE PROHIBITED FROM ALLOWING MUSIC OR OTHER SOUNDS TO EMANATE FROM THEIR SPACE INTO MALL COMMON AREA OR TO ADJACENT TENANT SPACE. TENANTS WHO GENERATE SOUND LEVELS EXCEEDING 40 DECIBELS ARE REQUIRED TO INSULATE THE DEMISING WALL AND CEILING AGAINST SOUND TRANSMISSION.

SPEAKERS MAY NOT BE LOCATED WITHIN 8' OF A STOREFRONT OR WITHIN 12" OF THE DEMISING WALL.

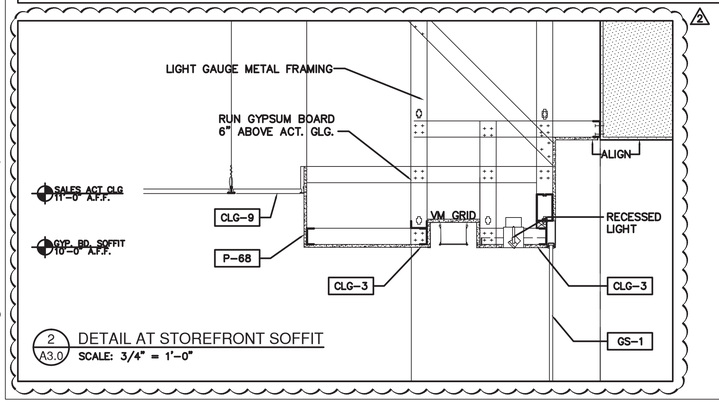

2 A3.0 DETAIL AT STOREFRONT SOFFIT
SCALE: 3/4" = 1'-0"

FIXTURE SCHEDULE

MARK	DESCRIPTION	NOTES
	2'X4',3 LAMP LAY-IN FIXTURE WITH ACRYLIC PRISMATIC LENS AND T8 LAMPS/ ENERGY SAVING BALLASTS	3,4
	2'X4',3 LAMP LAY-IN EMERGENCY NIGHT LIGHT FIXTURE WITH ACRYLIC PRISMATIC LENS AND T8 LAMPS/ ENERGY SAVING BALLASTS	1,3,4
	2'X2',3 LAMP LAY-IN FIXTURE WITH WHITE NARROW CELL PARABOLIC LENS AND T8 LAMPS/ BALLASTS	3,4
	2'X2',3 LAMP LAY-IN EMERGENCY NIGHT LIGHT FIXTURE WITH WHITE NARROW CELL PARABOLIC LENS AND T8 LAMPS/ BALLASTS	1,3,4
	10"X4', 2 LAMP RECESSED FLUOR. WALL WASHER/ ENERGY SAVING BALLASTS	3,4,6
	1'X4',2 LAMP SURFACE MOUNTED EMERGENCY NIGHT LIGHT FIXTURE WITH ACRYLIC PRISMATIC LENS, T8 LAMPS/ ENERGY SAVING BALLASTS	3,4
	RECESSED 3 LIGHT LED – ADJUSTABLE	3
	WALL MOUNTED EXIT SIGN WITH 90 MINUTE BATTERY BACK UP	2,3,4
	CEILING MOUNTED EXIT SIGN WITH 90 MINUTE BATTERY BACK UP	2,3,4
	6" ROUND LED DOWNLIGHT 3x4	3,4
	STANDARD LIGHT TRACK IN LENGTHS AS INDICATED ON PLAN	3,7
	HALO TRACK MOUNTED LED	3,7
	24"x24" HVAC DIFFUSER	
	24"x24" HVAC RETURN AIR GRILLE	
	24"x24" WIND-LOCK STEALTH ACCESS DOOR TRAP-24x24	
	2'x4' SUSPENDED CEILING GRID WITH SECOND LOOK ACT – REFER TO SHEET A5.0 FOR SPECIFICATION	
	CEILING EXHAUST FAN UNIT	
	RECESSED CEILING MOUNTED SPEAKER	5
	WALL MOUNTED SPEAKER – 72" A.F.F.	5
	FULLY RECESSED (CONCEALED) SPRINKLER HEAD	
	SEMI-RECESSED SPRINKLER HEAD	
	6" X 5' RED VM DISPLAY GRID	8

FIXTURE SCHEDULE NOTES:

1. FURNISH WITH EMERGENCY BALLAST AND BATTERY PACK TO SERVE AS A NIGHT LIGHT DURING NORMAL OPERATION AND AS EMERGENCY LIGHTING DURING POWER INTERRUPTION.
2. CEILING MOUNT: CENTERED ON DOOR AND 10" FROM WALL. ALL OTHERS AS INDICATED. WALL MOUNT: CENTERED 6" ABOVE DOOR FRAME.
3. ALL LIGHT FIXTURES AND LAMPS TO BE PURCHASED UNDER A NATIONAL PURCHASE AGREEMENT THROUGH BROWN SHOE LIGHTING VENDOR. REFER TO VENDOR CONTACTS, SHEET A1.0.
4. MODEL SPECIFICATIONS INDICATED INCLUDE UNIVERSAL VOLTAGE BALLASTS. CONFIRM WIRING INSTRUCTIONS FOR FIELD SPECIFIC VOLTAGE WITH LIGHTING SUPPLIER PRIOR TO INSTALLING FIXTURES.
5. AUDIO SPEAKERS TO BE PURCHASED UNDER A NATIONAL PURCHASE AGREEMENT THROUGH BROWN SHOE AUDIO VENDOR. REFER TO VENDOR CONTACTS, SHEET A1.0.
6. LIGHT TO BE DIRECTED *TOWARD* THE WALL.
7. INSTALL TRACK LIGHTING ONLY AFTER THE VICTORY FIXTURE DISPLAY UNITS AND CASHWRAP HAVE BEEN PROPERLY POSITIONED, NO EXCEPTIONS.
8. DISPLAY WINDOW CEILING GRID, SEE DETAIL 2/A3.0 FOR FURTHER INFORMATION.

CONSTRUCTION GENERAL NOTES

1. CEILING GRIDS ARE TO BE CENTERED IN ROOMS AS SHOWN UNLESS SPECIFICALLY DIMENSIONED OTHERWISE.
2. SPRINKLER SYSTEM HEADS ARE TO BE CENTERED IN CEILING TILES AS SHOWN UNLESS SPECIFICALLY DIMENSIONED OR SHOWN OTHERWISE. LOCATIONS ARE DEPICTED IN THESE DRAWINGS FOR INFORMATIONAL PURPOSES ONLY. SYSTEM INSTALLATION SHALL BE PER THE SPRINKLER SYSTEM CONTRACTOR'S APPROVED SHOP DRAWINGS.
3. ALL LOW VOLTAGE WIRING LOCATED ABOVE CEILING LEVEL AND CONCEALED IN WALLS SHALL BE PER CODE, NO EXCEPTIONS.
4. COORDINATE WITH THE AUDIO SYSTEM VENDOR FOR LOCATION OF SYSTEM COMPONENTS. REFER TO VENDOR CONTACTS, SHEET A1.0 LOCATIONS ARE DEPICTED IN THESE DRAWINGS FOR INFORMATIONAL PURPOSES ONLY. SYSTEM INSTALLATION SHALL BE PER THE BROWN SHOE PLANNING APPROVED REFLECTED CEILING PLAN.
5. ENSURE NO HORNS, STROBES OR OTHER DEVICES INTERFERE WITH FIXTURES OR FIRE PROTECTION DEVICES.

BROWN SHOE COMPANY, INC.
8300 Maryland Ave.
Clayton, MO 63105
314/854-4000
BROWN SHOE COMPANY

09/15/2014	BID & PERMIT
09/26/2014	2 LANDLORD COMMENTS

TRICARICO®
Tricarico Architecture and Design PC
502 Valley Road Wayne, NJ 07470
T (973) 692-0222 F (973) 692-0223
www.tricarico.com

DISCLAIMER ON REUSE:
THIS DRAWING, IN WHICH THESE DRAWINGS AND SPECIFICATIONS WAS PREPARED FOR USE ON THE PROJECT DESCRIBED HEREIN, IS NOT INTENDED FOR USE ON ANY OTHER PROJECT. IT IS PROHIBITED AND CONTRARY TO LAW WITHOUT THE ARCHITECT'S WRITTEN PERMISSION.

COPYRIGHT NOTICE:
THESE DRAWINGS AND SPECIFICATIONS ARE SUBJECT TO COPYRIGHT PROTECTION AS AN "ARCHITECTURAL WORK" PURSUANT TO THE ARCHITECTURAL WORKS COPYRIGHT ACT, 17 U.S.C. AS AMENDED DECEMBER 1990. SECTION 113. THE ARCHITECT RETAINS THE EXCLUSIVE RIGHTS TO THE REPRODUCTION, PUBLICATION, OR OTHER USE OF, OR THE PREPARATION OF DERIVATIVE WORKS BASED UPON, THE ARCHITECTURAL WORK EXPRESSED IN THESE DRAWINGS, INCLUDING BUT NOT LIMITED TO, THE FLOOR PLAN, ARRANGEMENT, AND COMPOSITION OF SPACES AND ELEMENTS OF THE DESIGN.

FAMOUS footwear
STORE #3406
NORTH POINT MALL
1000 NORTH POINT CIR SUITE 2208
ALPHARETTA, GA 30022

DESIGNED BY:	BF
DRAWN BY:	MHA
CHECKED BY:	MW
DATE:	09/26/14
PROTO. VER.:	010413
PROJECT NO:	140341

REFLECTED CLG. PLAN

A3.0

COPYRIGHT © 2014 BY BROWN SHOE, INC. PROTOTYPE VERSION: 010413

NOTE:
MERCHANDISING WITHIN THE DESIGN DISPLAY ZONE SHALL COMPLY WITH THE FOLLOWING:

EXTENDING 5'-0" FROM THE STOREFRONT GLAZING, THE SIDE WALLS OF THE STORE SHALL BE DEDICATED TO STOREFRONT DISPLAY, AND THE STOREFRONT SHOW WINDOWS SHALL NOT CONTAIN SALE OR DISCOUNTED MERCHANDISE.

AT THE STOREFRONT ENTRY, DISPLAY FIXTURES OR MERCHANDISE, EITHER TEMPORARY OR PERMANENT, SHALL NOT BE PLACED CLOSER THAT THREE (3'-0"_ FEET INSIDE THE TENANT'S PREMISES, MEASURED FROM THE POINT OF THE STOREFRONT CLOSURE.

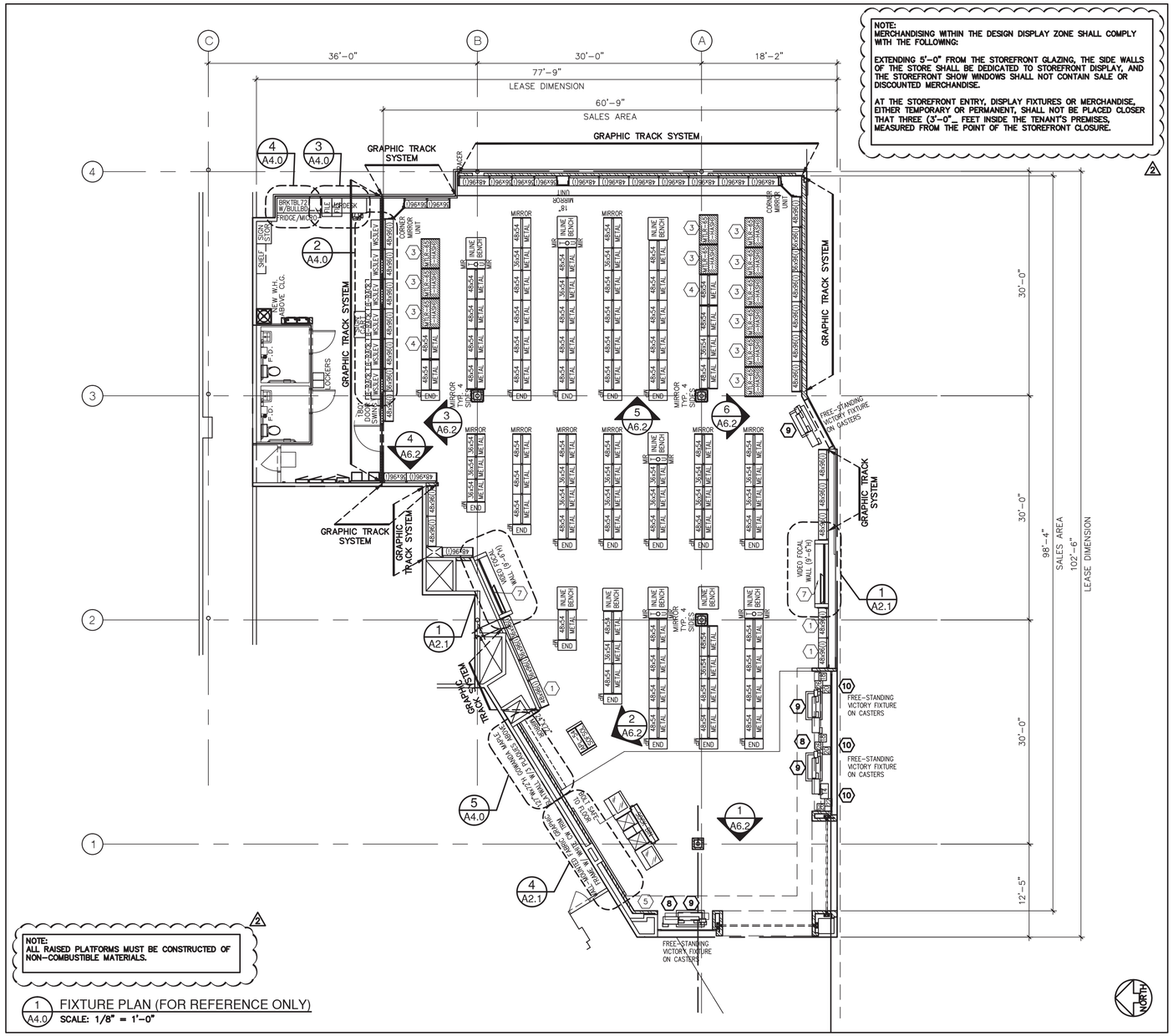

NOTE:
ALL RAISED PLATFORMS MUST BE CONSTRUCTED OF NON-COMBUSTIBLE MATERIALS.

1 A4.0 FIXTURE PLAN (FOR REFERENCE ONLY)
SCALE: 1/8" = 1'-0"

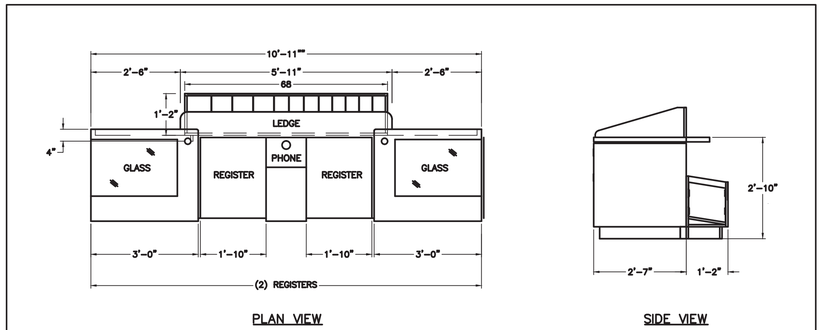

6 A4.0 CASHWRAP DETAIL
SCALE: 1/2" = 1'-0"

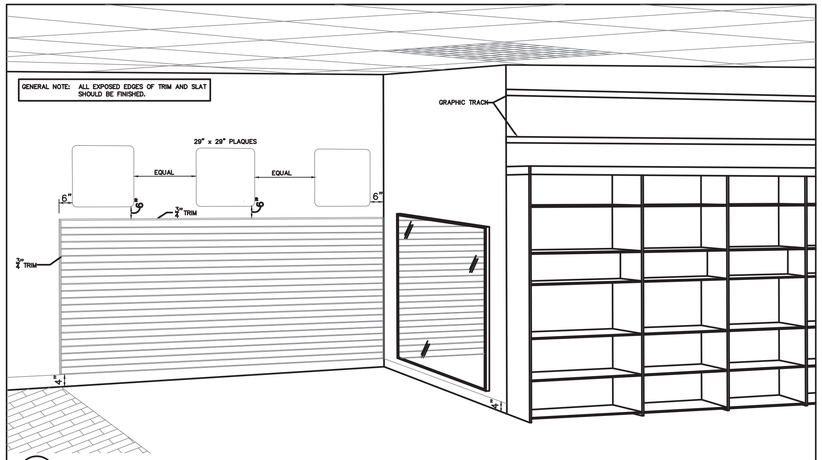

5 A4.0 ACCESSORY WALL W/3 GRAPHIC PLAQUES
SCALE: NONE

FIXTURE PLAN KEY NOTES

1. SLATBACK UNIT.
2. END PANEL.
3. (11) TOTAL HASH RACKS TO BE SHIPPED TO STORE.
4. INDEPENDENT UNIT.
5. SECURITY KEYPAD.
6. NOT USED.
7. T.V. MONITORS SUPPLIED AND INSTALLED BY BROWN SHOE.
8. (4) TOTAL RED V.M. GRID ABOVE
9. FREESTANDING VICTORY FIXTURES ON CASTERS
10. DISPLAY PODS

CONSTRUCTION GEN. NOTES

1. FIXTURE INSTALLER SHALL VERIFY THE FOLLOWING DIMENSIONS AND REPORT ANY DISCREPANCIES TO BROWN SHOE CONSTRUCTION MANAGER:
   A. OVERALL SALES FLOOR WIDTH
   B. OVERALL SALES FLOOR DEPTH
   C. COL. LOCATION TO CENTERLINE
   D. COLUMN ENCLOSURE SIZE
   E. STOREFRONT ENTRY LOCATION
   F. STOREFRONT TILE LOCATION
   G. CEILING HEIGHT
2. AISLES BETWEEN FLOOR FIXTURE ROWS AND AT PERIMETER AISLES ALONG WALL BINS COMPLY WITH 48" WIDE AISLE REQUIREMENTS.
3. FIXTURE CREW TO INSTALL LIFT/DROP GRAPHIC TRACK SYSTEM. THIS SYSTEM IS PROVIDED BY FIXTURE COMPANY. REFER TO VENDOR LIST ON THE TITLE SHEET FOR CONTACT INFORMATION. VERIFY GRAPHIC LOCATIONS WITH VISUAL MERCHANDISING MANAGER PRIOR TO INSTALLATION.
4. THE G.C. IS RESPONSIBLE FOR PROVIDING AND INSTALLING ALL MIRRORS INDICATED AT DRYWALLED SURFACES (WALL MOUNTED MIRRORS AND COLUMN MOUNTED MIRRORS). REFER TO MIRROR DETAILS ON SHEET A7.0 FOR ADDITIONAL INFORMATION.
5. IF CODE REQUIRES FIRE ALARM PANEL TO BE LOCATED IN SALES AREA, COORDINATE LOCATION WITH BROWN SHOE DESIGNER.
6. ALL VIDEO MONITORS AT FOCAL WALLS, DISPLAY WINDOWS, AND END CAPS TO BE POWERED BY NON-SWITCHED CIRCUIT PROVIDING CONSTANT POWER.

1. WALL STANDARDS SUPPLIED BY FIXTURE VENDOR.
2. 13" DEEP METAL SHELVES SUPPLIED BY FIXTURE VENDOR. REFER TO PLAN FOR SHELF QUANTITY, LOCATION AND LENGTH.
3. BAKERS RACK INDICATED FOR REFERENCE ONLY, MAX. HEIGHT OF 5'-0". REFER TO SHEET A4.0 FOR QUANTITIES AND LOCATIONS IF APPLICABLE.

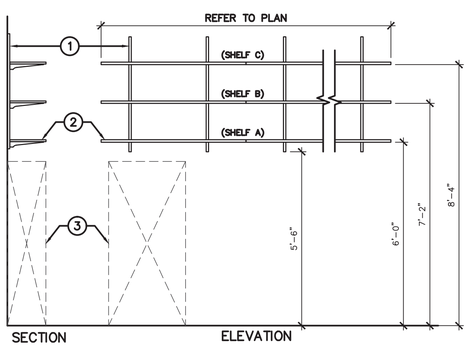

2 A4.0 WORKROOM SHELVING DETAIL
SCALE: NONE

1. WALL STANDARDS SUPPLIED BY FIXTURE VENDOR.
2. 13" DEEP METAL SHELVES SUPPLIED BY FIXTURE VENDOR. REFER TO PLAN FOR SHELF QUANTITY, LOCATION AND LENGTH.
3. STANDARD 24" DEEP WHITE LAMINATE COUNTER TOP WITH BULLNOSE FRONT EDGE (AS PURCHASED AT ANY HOME IMPROVEMENT CENTER). SECURED TO ANGLE BRACES AND LEDGER BOARD. REFER TO PLAN FOR LENGTH.
4. 3" DIA. HOLE WITH GROMMET AT REAR OF COUNTER FOR POWER AND DATA CABLES. G.C. TO BORE HOLES AND INSTALL GROMMETS.
5. KNAPE & VOGT #5710 KEYBOARD AND MOUSE TRAY UNDER COUNTER. VERIFY LOCATION WITH THE BROWN SHOE CONSTRUCTION MANAGER.
6. HEAVY DUTY ANGLE BRACE FASTENED TO STUD (TYP).

GENERAL NOTE: LOCATION AND CONFIGURATION MAY VARY, REFER TO PLAN. CENTER LINE OF SHELF STANDARD SHALL EQUAL THE CENTER LINE OF THE STUD.

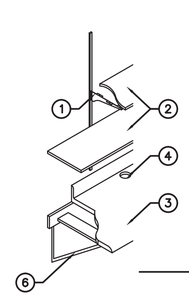

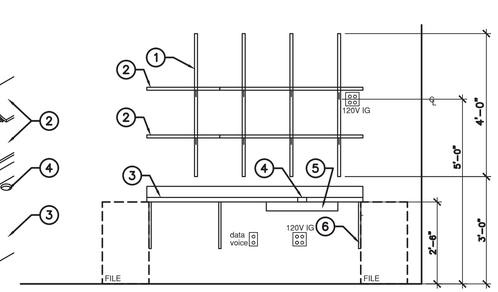

3 A4.0 DETAIL AT MANAGER'S WORK AREA
SCALE: NONE

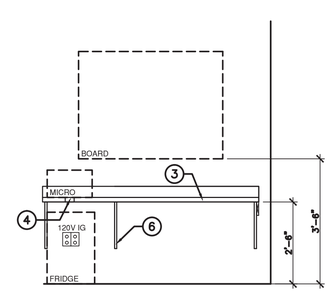

4 A4.0 DETAIL AT BREAK AREA
SCALE: NONE

BROWN SHOE COMPANY, INC.
8300 Maryland Ave.
Clayton, MO 63105
314/854-4000
BROWN SHOE COMPANY

09/15/2014	BID & PERMIT
09/26/2014	LANDLORD COMMENTS
09/24/2014	CLIENT COMMENTS

TRICARICO
Tricarico Architecture and Design PC
502 Valley Road Wayne, NJ 07470
T (973) 692-0222 F (973) 692-0223
www.tricaricoa.com

DISCLAIMER OF REVISIONS:
THE DRAWINGS, SPECIFICATIONS AND OTHER DOCUMENTS AS A WHOLE WHICH ARE THE PROPERTY OF THE BROWN SHOE COMPANY, INC. (BROWN SHOE) AND THE ARCHITECT, TRICARICO ARCHITECTURE AND DESIGN, PC (TRICARICO) ARE INSTRUMENTS OF SERVICE FOR USE SOLELY WITH RESPECT TO THIS PROJECT. THE DRAWINGS, SPECIFICATIONS AND OTHER DOCUMENTS MAY BE REVISED BY BROWN SHOE, TRICARICO AND THEIR RESPECTIVE CONSULTANTS, AS NECESSARY, IN THE PROCESS OF PREPARING THE FINAL DRAWINGS, SPECIFICATIONS AND OTHER DOCUMENTS.

COPYRIGHT NOTICE:
THE DRAWINGS, SPECIFICATIONS ARE SUBJECT TO COPYRIGHT PROTECTION AS AN "ARCHITECTURAL WORK" PURSUANT TO THE ARCHITECTURAL WORKS COPYRIGHT PROTECTION ACT, 17 U.S.C. 2, AMENDED DECEMBER 1990, SECTION 102. THE ARCHITECT, TRICARICO ARCHITECTURE AND DESIGN, PC, RETAINS THE COPYRIGHT TO THE DESIGN OF THE PREMISES, THE OVERALL FLOOR PLAN, ARRANGEMENT, AND DISPOSITION OF SPACE AND ELEMENTS OF THE DESIGN.

FAMOUS footwear
STORE #3406
NORTH POINT MALL
1000 NORTH POINT CIR SUITE 2208
ALPHARETTA, GA 30022

DESIGNED BY:	BF
DRAWN BY:	MHA
CHECKED BY:	MW
DATE:	09/26/14
PROTO. VER.:	010413
PROJECT NO:	140341

FIXTURE PLAN

A4.0

COPYRIGHT © 2014 BY BROWN SHOE, INC. PROTOTYPE VERSION: 010413

REFER TO SHEET A6.0 FOR ELEVATION FINISHES

Install a waterproof membrane under mop sink

NOTE: WATERPROOF MEMBRANE MUST BE WATER TESTED AND APPROVED BY ON-SITE OPERATIONS MANAGER.

NOTE: MATCH MALL TILE TO CENTERLINE OF STOREFRONT CLOSURE.

NOTE: FLOOR TRANSITIONS MUST BE FLUSH. VINYL OR RUBBER REDUCER STRIPS NOT PERMITTED IN CUSTOMER AREAS. MAY USE METAL TERRAZZO STRIPS.

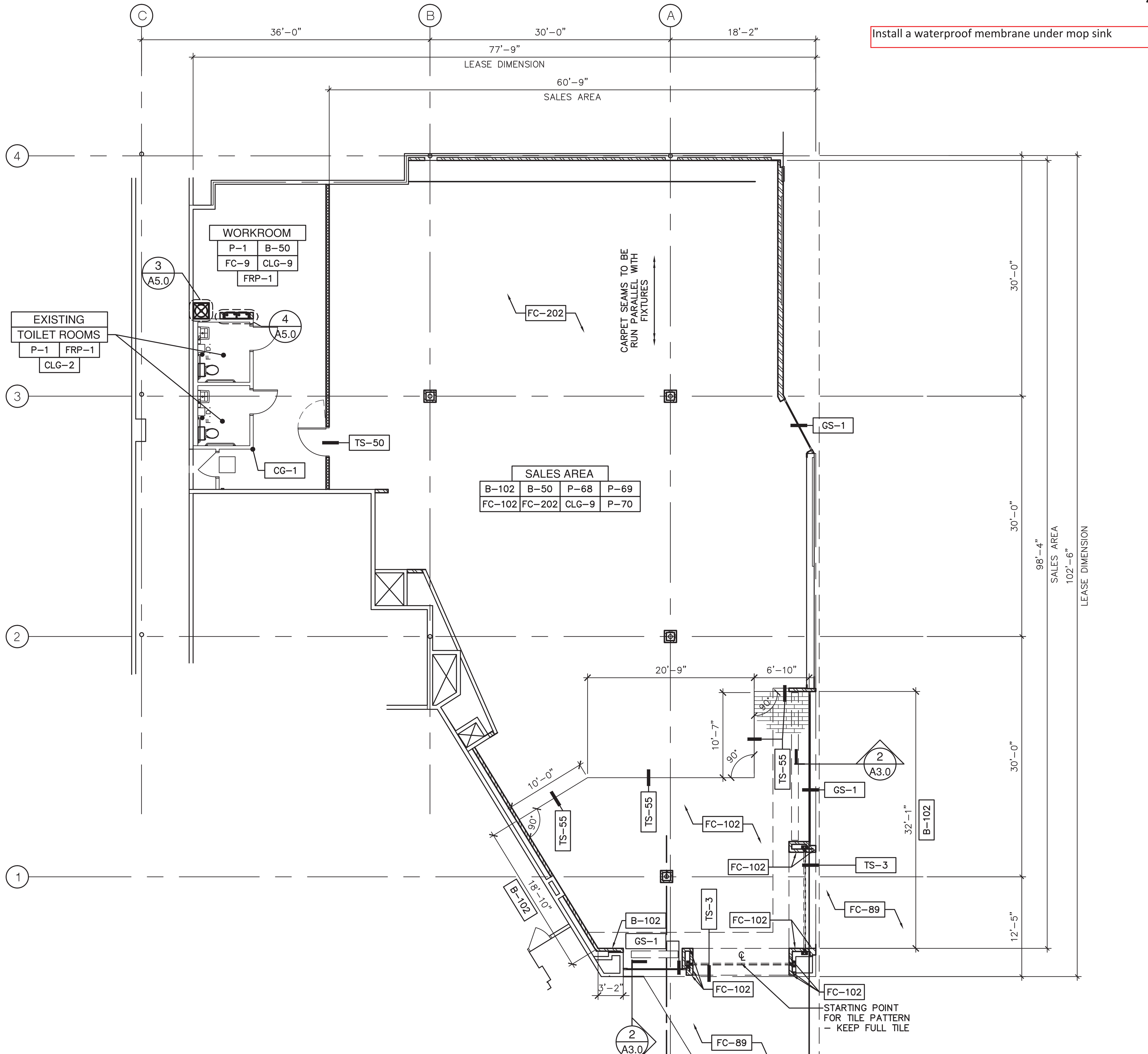

1 A2.0 FLOOR PLAN
SCALE: 1/8" = 1'–0"

NORTH

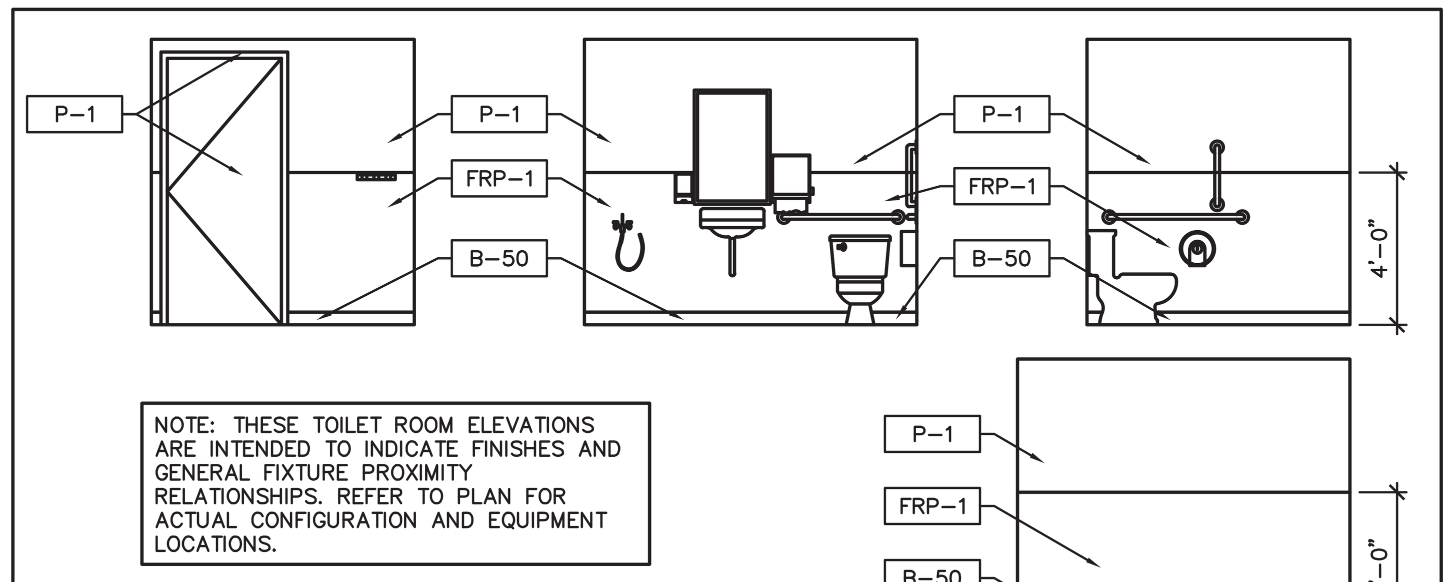

NOTE: THESE TOILET ROOM ELEVATIONS ARE INTENDED TO INDICATE FINISHES AND GENERAL FIXTURE PROXIMITY RELATIONSHIPS. REFER TO PLAN FOR ACTUAL CONFIGURATION AND EQUIPMENT LOCATIONS.

2 A5.0 TYPICAL TOILET ROOM ELEVATIONS
SCALE: 1/4" = 1'–0"

1. FLOOR MOUNTED MOP SINK
2. VACUUM BREAKER FAUCET WITH HOSE FITTING. MOUNT AT 36" A.F.F.
3. MOP HANGER
4. PROVIDE SILICONE SEALANT AT TRANSITIONS FROM FRP TO BASE AND TO RIM OF MOP SINK
5. FRP ON WALLS TO 4'–0" A.F.F. AND EXTENDING TO THE NEAREST DOOR FRAME OR WALL BREAK. IN ABSENCE OF SUCH POINT, EXTEND FRP PAST THE EDGE OF THE MOP SINK A MINIMUM OF 1'–6". REFER TO THIS SHEET FOR SPECIFICATION.
6. 30" HOSE

REFER TO PLUMBING SHEET(S) FOR ACTUAL PLUMBING FIXTURE AND ACCESSORY SPECIFICATIONS.

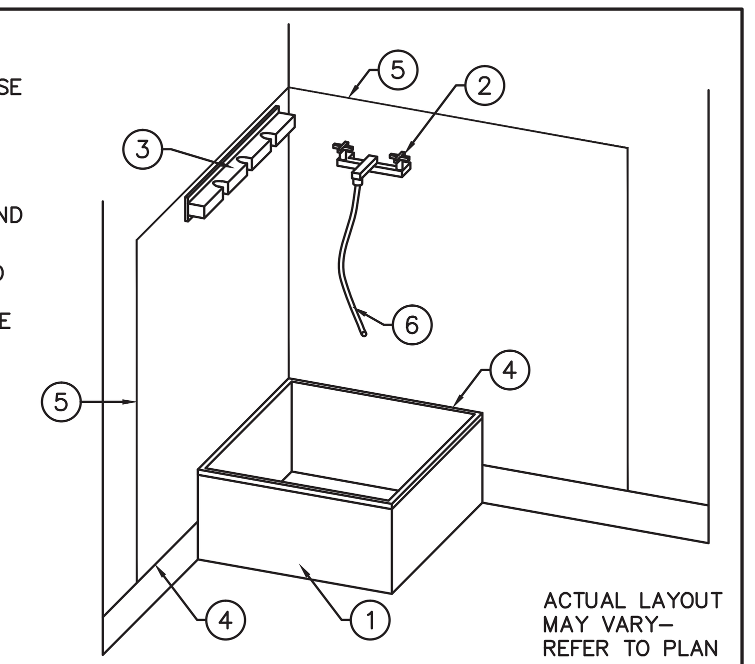

ACTUAL LAYOUT MAY VARY– REFER TO PLAN

3 A5.0 DETAIL AT MOP SINK
SCALE: NONE

PROVIDE FRP BEHIND DRINKING FOUNTAIN(S) AS INDICATED.

PROVIDE FRP THROUGHOUT HALLWAY PER PLAN. WHERE NO HALLWAY EXISTS PROVIDE FRP 24" BEYOND NEAREST POINT OF DRINKING FOUNTAIN IN THE ABSENCE OF A DOOR FRAME OR NATURAL BREAK.

PROVIDE A 30" x 48" MINIMUM CLEAR FLOOR SPACE CENTERED AT LOW DRINKING FOUNTAIN UNIT

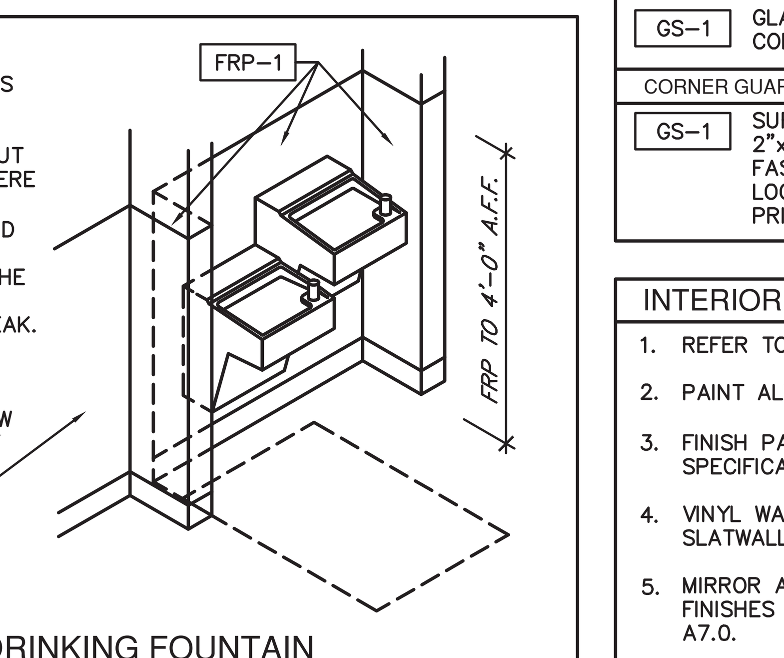

FRP–1 @ HALLWAY

4 A5.0 DETAIL AT DRINKING FOUNTAIN
SCALE: NOT TO SCALE

FINISH SCHEDULE

FLOOR COVERING	
FC–9	12" X 12" VINYL COMPOSITION TILE (VCT): MANNINGTON ESSENTIALS, COLOR 123 (WHEAT). ALL VCT SHOULD BE CLEANED AND SEALED. PURCHASED BY G.C.
FC–89	MALL FLOORING; G.C. TO EXACTLY MATCH MALL FLOORING SPECIFICATIONS AND INSTALLATION. COORDINATE WITH LANDLORD'S REPRESENTATIVE FOR SPECIFICATION AND AVAILABILITY. MALL TILE CAN BE PURCHASED FROM ON–SITE TENANT COORDINATOR.
FC–102	CERAMIC TILE: MANUFACTURER MARCA CORONA: SERIES: EASYWOOD; COLOR: FAGGIO; 6X24 TILES TO BE 1/ 3 STAGGERED PATTERN, BUTT JOINTED. GROUT: #61 PARCHMENT UNSANDED
FC–202	CARPET: RUNWAY BY MASLAND (7841–48107). CARPET INSTALLATION SHALL BE DIRECT GLUE DOWN UTILIZING MASLAND #2750 ADHESIVE (NO SUBSTITUTIONS). ALL SEAMS SHALL BE SEALED UTILIZING MASLAND #1810 SEAM SEALER (NO SUBSTITUTIONS). INSTALLATION SHALL BE PER C.R.I. MANUAL #104–1996. END TO END BUTT SEAMS ARE PROHIBITED.
BASE	
B–50	4" RUBBER BASE: JOHNSONITE – COVE BASE, COLOR #DC–29 MOONROCK. APPLY AT EXPOSED WALL SURFACES ONLY, DO NOT INSTALL BEHIND FOCAL WALLS OR AT AREAS WITH TILE FLOORING. PURCHASED BY G.C.
B–102	4"–6" TILE BASE: EXACTLY MATCH FINISH FC–102 ABOVE. THIS BASE IS ONLY USED AT THE STOREFRONT AND CERAMIC TILED AREAS AS INDICATED. G.C. TO FIELD CUT FC–102 TO PRODUCE THIS BASE. INSTALL WITH CUT EDGE DOWN.
PAINT	
P–1	PAINT: (1) PRIMER COAT OF BENJAMIN MOORE & CO. SUPER SPEC LATEX ENAMEL UNDERCOATER & PRIMER SEALER 253, TINTED TO MATCH FINISH COAT, AND (2) COATS OF BENJAMIN MOORE & CO. #AC–40 GLACIER WHITE, EGG SHELL FINISH AT WALLS AND CEILINGS, SEMI–GLOSS FINISH AT DOORS AND DOOR FRAMES.
P–68	PAINT: (2) COATS BENJAMIN MOORE ULTRA SPEC 500 INTERIOR (538) # I–03 BONE WHITE, EGG SHELL FINISH AT WALLS AND CEILINGS. (2) COATS BENJAMIN MOORE ULTRA SPEC 500 INTERIOR (539) SEMI–GLOSS FINISH AT DOORS AND FRAMES. PRIME GYP. BOARD. SUBSTRATES WITH ULTRA SPEC 500 INTERIOR LATEX PRIMER (534). FOR BEST HIDING RESULTS TINT THE PRIMER TO THE APPROXIMATE SHADE OF THE FINISH COAT. FOR METAL DOORS AND FRAMES, USE (1) PRIMER COAT P04 SUPER SPEC HP ACRYLIC PRIMER TINTED TO MATCH FINISH COAT. REFER TO PRODUCT TDS SHEETS FOR PRIMING INSTRUCTIONS REGARDING ADDITIONAL SUBSTRATES.
P–69	PAINT: (2) COATS BENJAMIN MOORE ULTRA SPEC 500 INTERIOR (538) # I–02 SUPER WHITE, EGG SHELL FINISH AT WALLS AND CEILINGS. (2) COATS BENJAMIN MOORE ULTRA SPEC 500 INTERIOR (539) SEMI–GLOSS FINISH AT DOORS AND FRAMES. PRIME GYP. BOARD. SUBSTRATES WITH ULTRA SPEC 500 INTERIOR LATEX PRIMER (534). FOR BEST HIDING RESULTS TINT THE PRIMER TO THE APPROXIMATE SHADE OF THE FINISH COAT. FOR METAL DOORS AND FRAMES, USE (1) PRIMER COAT P04 SUPER SPEC HP ACRYLIC PRIMER TINTED TO MATCH FINISH COAT. REFER TO PRODUCT TDS SHEETS FOR PRIMING INSTRUCTIONS REGARDING ADDITIONAL SUBSTRATES.
P–70	PAINT: SHERWIN WILLIAMS PROMAR 200 ZERO VOC LATEX PRIMER, B28W2600 (4 MILS WET, 1.5 MILS DRY – TINT PRIMER TO COLOR P2) AND (2) FINISH COATS OF SHERWIN WILLIAMS PROMAR 200 ZERO VOC LATEX EGG SHELL, B20–2600 SERIES (4 MILS WET, 1.7 MILS DRY PER COAT) COLOR TO BE SW 6866 HEART THROB OR BROWN SHOE APPROVED EQUAL, (2) COATS BENJAMIN MOORE ULTRA SPEC 800 INTERIOR (538) FAMOUS FOOTWEAR RED (CUSTOM COLOR) GALLON FORMULA: BASE 538–4XW1–1X21.50, M1–4X18.0, R2–4X4.0, R3–1X19.0, R1–0X8.0, EGG SHELL FINISH AT WALLS AND CEILING, PRIME GYP. BD. SUBSTRATES WITH HIGH HIDING ALL PURPOSE PRIMER (046) TINTED TO THE FOLLOWING COLOR: GALLON FORMULA M1–4X18.0, R2–4X4.0, R3–1X19.0, R1–0X8.0, REFER TO PRODUCT TDS SHEETS FOR PRIMING INSTRUCTIONS REGARDING ADDITIONAL SUBSTRATES.
CEILING	
CLG–2	GYPSUM BOARD – PAINTED P–1. UNLESS OTHERWISE NOTED.
CLG–3	GYPSUM BOARD – PAINTED P–70. UNLESS OTHERWISE NOTED.
CLG–9	LAY–IN CEILING: ARMSTRONG PRELUDE XL, WHITE 2'X4' SUSPENDED CEILING GRID WITH ARMSTRONG CORTEGA SECOND LOOK #2767; CLASS A FINISH – WHITE TEGULAR EDGE LAY–IN ACOUTIC CEILING TILES. SECOND LOOK CEILING TILES.
TRANSITION	
TS–3	TILE TO MALL FLOORING TRANSITION STRIP (1/8" WIDE): SCHLUTER "SCHIENE–AE100" CLEAR SATIN ANODIZED ALUMINUM OR OWNER APPROVED EQUAL. PURCHASED BY G.C.
TS–50	CARPET TO VCT OR SOLID VINYL TILE RUBBER ADAPTER STRIP: BY JOHNSONITE #CTA–29–J, COLOR #29 MOON ROCK. USE JOHNSONITE 945 NONFLAMMABLE CONTACT ADHESIVE. PURCHASED BY G.C.
TS–55	CARPET TO TILE FLOORING TRANSITION STRIP: (1/4" H.) GENOTEK 627 ALUMINUM TRANSITION IN SATIN SILVER FINISH OR OWNER APPROVED EQUAL. PURCHASED BY G.C.
COVERINGS	
L–10	PLASTIC LAMINATE: WILSONART, COLOR 11018–60 GOWANDA MAPLE WITH MATTE FINISH, SUPPLIED BY FIXTURE VENDOR.
FRP–1	FIBERGLASS REINFORCED PANEL (FRP) TO 4'–0" A.F.F., COLOR: WHITE WITH PEBBLE FINISH. CLASS A FLAME SPREAD RATING. TRIM CAP AND MOLDINGS TO MATCH PANEL.
ACM–3	ALUMINUM COMPOSITE METAL: ALPOLIC, SOLID COLORS, RVW WHITE – REFER TO SHEET A1.0 FOR CONTACT INFORMATION.
GS–1	GLAZING SYSTEM: STYLMARK FRAMING AND PARTITION SYSTEMS, COLOR CUSTOM COLOR TO MATCH P70 (RED). REFER TO SHEET A1.0 FOR VENDOR INFORMATION.
CORNER GUARD	
GS–1	SURFACE MOUNTED CORNER GUARDS TO BE HEAVY DUTY STAINLESS STEEL, 2"x2"x48" IN LENGTH. SECURE TO WALL WITH COUNTERSUNK STAINLESS STEEL FASTENERS. START CORNER GUARD AT TOP OF WALL BASE. CONFIRM EXACT LOCATION AND QUANTITY WITH BROWN SHOE CONSTRUCTION ADMINISTRATOR PRIOR TO ORDERING.

INTERIOR FINISH GENERAL NOTES

1. REFER TO SHEET A1.0 FOR VENDOR/ SUPPLIER CONTACT INFORMATION.
2. PAINT ALL DOORS TO MATCH ADJACENT WALLS FINISH PER FINISH SCHEDULE DETAILS.
3. FINISH PATTERNS AND/ OR SPACING IS TO BE CENTERED IN ROOMS OR AREAS UNLESS SPECIFICALLY DIMENSIONED OR NOTED OTHERWISE.
4. VINYL WALL BASE TO BE INSTALLED BEHIND ALL WALL FIXTURES, CONTINUE BASE AT SLATWALL AREAS, EXIT WALLS AND EXPOSED WALL SURFACES.
5. MIRROR ADHESIVE CANNOT BE APPLIED TO PAINTED WALL SURFACES. REMOVE ALL FINISHES DOWN TO SUBSTRATE PRIOR TO APPLICATION. REFER TO DETAILS ON SHEET A7.0.
6. CARPET SEAM SHALL RUN PARALLEL WITH FIXTURES, IF FIXTURES ARE AT ANGLES CARPET SEAMS SHALL RUN PARALLEL WITH DEMISING WALLS.

BROWN SHOE COMPANY, INC.
8300 Maryland Ave.
Clayton, MO 63105
314/854-4000
BROWN SHOE COMPANY

09/15/2014	BID & PERMIT
09/26/2014	2 LANDLORD COMMENTS

TRICARICO®
Tricarico Architecture and Design PC
502 Valley Road Wayne, NJ 07470
T (973) 692-0222 F (973) 692-0223
www.tricarico.com

PROHIBITION ON REUSE: INFORMATION CONTAINED IN THESE DRAWINGS AND SPECIFICATIONS WAS PREPARED FOR USE ON THE SPECIFIC SITE INDICATED. USE OF THIS INFORMATION ON ANOTHER PROJECT IS PROHIBITED AND CONTRARY TO LAW UNLESS EXPRESSLY AUTHORIZED IN WRITING BY THE AUTHOR.

THESE DRAWINGS AND SPECIFICATIONS ARE AND SHALL REMAIN THE PROPERTY OF THE BROWN SHOE, INC. DISPLAY, REPRODUCTION, OR USE FOR ANY BUT THE SPECIFICALLY AGREED UPON PURPOSES, WITHOUT THE WRITTEN AUTHORIZATION OF BROWN SHOE, INC. IS STRICTLY PROHIBITED.

COPYRIGHT NOTICE: THESE DRAWINGS AND SPECIFICATIONS ARE SUBJECT TO COPYRIGHT PROTECTION AS AN "ARCHITECTURAL WORK" UNDER SEC. 102 OF THE COPYRIGHT ACT, 17 U.S.C. AS AMENDED DECEMBER 1990; KNOWN AS THE ARCHITECTURAL WORKS COPYRIGHT PROTECTION ACT OF 1990. THE PROTECTION INCLUDES, WITHOUT LIMITATION, THE OVERALL FORM, ARRANGEMENT, AND COMPOSITION OF SPACES AND ELEMENTS OF THE DESIGN.

FAMOUS footwear
STORE #3406
NORTH POINT MALL
1000 NORTH POINT CIR SUITE 2208
ALPHARETTA, GA 30022

DESIGNED BY:	BF
DRAWN BY:	MHA
CHECKED BY:	MW
DATE:	09/26/14
PROTO. VER.:	010413
PROJECT NO:	140341

INTERIOR FINISH PLAN

A5.0

COPYRIGHT ©2014 BY BROWN SHOE, INC. PROTOTYPE VERSION: 010413

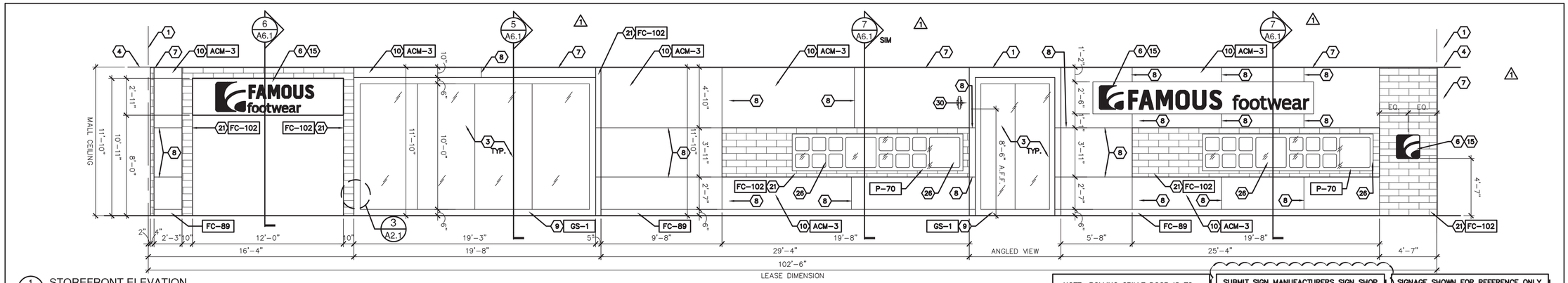

1 A6.0 STOREFRONT ELEVATION
SCALE: 1/4" = 1'-0"

NOTE: ROLLING GRILLE DOOR IS TO REMAIN OPEN DURING OCCUPANCY.

SUBMIT SIGN MANUFACTURERS SIGN SHOP DRAWINGS FOR APPROVAL. SIGN MUST BE IN COMPLIANCE WITH LEASE EXHIBIT.

SIGNAGE SHOWN FOR REFERENCE ONLY. ALL FINAL SIGN SHOP DRAWINGS TO BE SUBMITTED UNDER SEPARATE PERMIT.

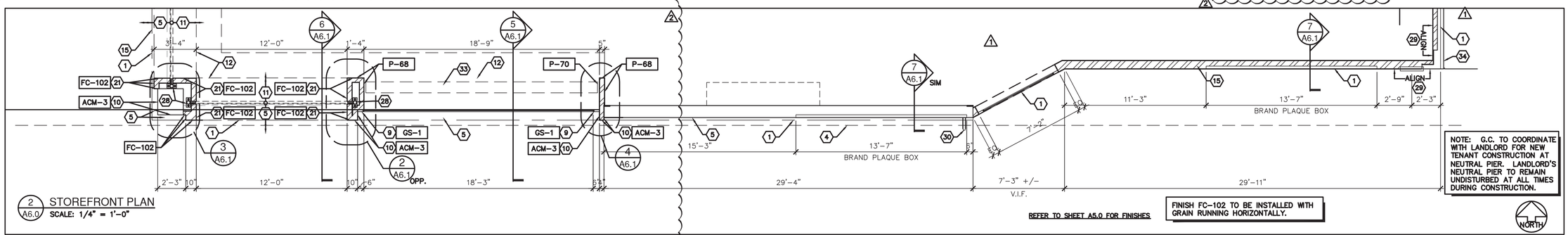

2 A6.0 STOREFRONT PLAN
SCALE: 1/4" = 1'-0"

REFER TO SHEET A5.0 FOR FINISHES

FINISH FC-102 TO BE INSTALLED WITH GRAIN RUNNING HORIZONTALLY.

NOTE: G.C. TO COORDINATE WITH LANDLORD FOR NEW TENANT CONSTRUCTION AT NEUTRAL PIER. LANDLORD'S NEUTRAL PIER TO REMAIN UNDISTURBED AT ALL TIMES DURING CONSTRUCTION.

NORTH

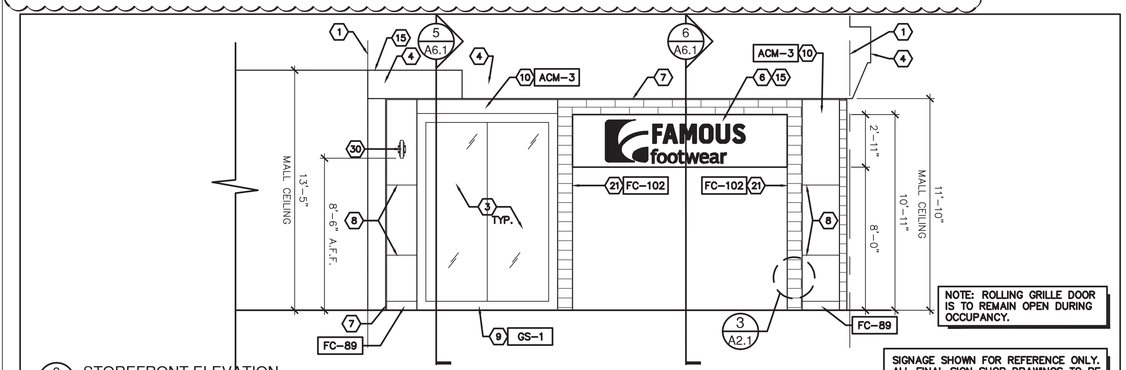

3 A6.0 STOREFRONT ELEVATION
SCALE: 1/4" = 1'-0"

NOTE: ROLLING GRILLE DOOR IS TO REMAIN OPEN DURING OCCUPANCY.

SIGNAGE SHOWN FOR REFERENCE ONLY. ALL FINAL SIGN SHOP DRAWINGS TO BE SUBMITTED UNDER SEPARATE PERMIT.

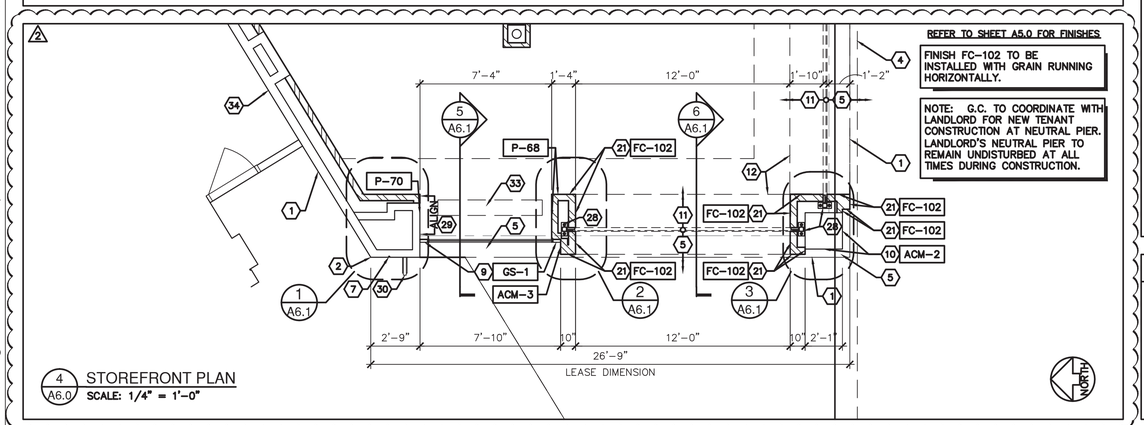

4 A6.0 STOREFRONT PLAN
SCALE: 1/4" = 1'-0"

REFER TO SHEET A5.0 FOR FINISHES

FINISH FC-102 TO BE INSTALLED WITH GRAIN RUNNING HORIZONTALLY.

NOTE: G.C. TO COORDINATE WITH LANDLORD FOR NEW TENANT CONSTRUCTION AT NEUTRAL PIER. LANDLORD'S NEUTRAL PIER TO REMAIN UNDISTURBED AT ALL TIMES DURING CONSTRUCTION.

KEYED NOTES

1. LEASE LINE LOCATION. VERIFY LOCATION AT STOREFRONT WITH ONSITE LANDLORD MANAGEMENT PRIOR TO CONSTRUCTION START.
2. LANDLORD'S NEUTRAL PIER. G.C. TO PRESERVE AND PROTECT DURING DEMOLITION AND CONSTRUCTION.
3. 1/2" CLEAR TEMPERED GLAZING. BUTT JOINT GLAZING WITH 1/4" MAX. SPACING.
4. EXISTING MALL BULKHEAD TO REMAIN. G.C. TO PRESERVE AND PROTECT DURING DEMOLITION AND CONSTRUCTION.
5. G.C. TO EXTEND MALL TILE FROM LEASE LINE TO ROLLING GRILLE CLOSURE LINE AND OR STOREFRONT.
6. RECESSED RED PANEL INTERNALLY ILLUMINATED WITH PUSH-THRU ACRYLIC LETTERS AND LOGO STOREFRONT SIGNAGE BY SIGN VENDOR, REFER TO CONTACTS, A1.0 SIGNAGE IS SHOWN FOR REFERENCE ONLY AND IS SUBMITTED UNDER SEPARATE SUBMITTAL AND PERMIT.
7. EXISTING 3/4" METAL CHANNEL REVEAL PAINTED BLACK AS REQUIRED.
8. ACM SYSTEM SEAM LOCATION, (FIELD VERIFY) BUTT JOINT. SYSTEM MUST BE BLIND FASTENED NO VISIBLE MEANS OF ATTACHMENT PERMITTED.
9. NEW 6" HIGH GLAZING BASE, SIDE AND HEAD. REFER TO FINISH GS-1, SHEET A5.0
10. ONE LAYER 1/2" PLYWOOD OVER 5/8" GYPSUM WALL BOARD AT ALL LOCATIONS RECEIVING ALUMINUM COMPOSITE METAL (ACM-3). ELEMENT ATTACHED PER MANUFACTURER'S SPECIFICATIONS. PREPARE ALL PLYWOOD SURFACES AND JOINTS PER MANUFACTURER'S REQUIREMENTS AND APPLICATION INSTRUCTIONS BY G.C.
11. STOREFRONT FLOOR TILE, REFER TO SPECIFICATIONS ON SHEET A5.0
12. LINE OF NEW GYPSUM BOARD SOFFIT ABOVE @ 10'-0" A.F.F.
13. FIRE RETARDANT TREATED WOOD BLOCKING AS REQUIRED.
14. NOT USED.
15. PROVIDE ADDITIONAL METAL FRAMING AT LOCATION FOR SIGNAGE.
16. LIGHT FIXTURE, REFER TO PLAN AND SPECIFICATIONS ON SHEET A3.0 & E3.0
17. MINIMUM FRAMING SPACE FOR FIXTURES = 14½" REFER TO MFR. PREDICATIONS
18. INTERMEDIATE FRAMING BETWEEN /BEYOND FIXTURES
19. DOUBLE 6" X 18 GA. METAL JOIST HEADER, WELDED TOGETHER, BEARING DIRECTLY ON STUDS BELOW. ALL FASTENING TO BE PER MANUFACTURER'S RECOMMENDATIONS.
20. EXISTING BUILDOUT TO REMAIN. G.C. TO PATCH AND REPAIR AS REQUIRED FOR NEW TENANT FINISHES.
21. ONE LAYER CATEGORY 3 HEAVY DUTY IMPACT RESISTANT 5/8" FIRE CODE GYPSUM WALL BOARD ATTACHED PER MANUFACTURER'S SPECIFICATIONS. TAPE AND SAND ALL JOINTS SMOOTH.
22. 3 5/8" X 20 GA. METAL STUD FRAMING @ 16" O.C. TYPICAL (U.N.O.)
23. 3 5/8" X 20 GA. METAL STUD FRAMED SOFFIT. USE (4) #10 SMS TYP. AT ALL LIGHT GAGE METAL FRAMED CONNECTIONS
24. PROVIDE DBL WELDED STUDS AT ALL BOXED HEADER BEARING LOCATIONS, SEE KEYNOTE # 19.
25. 3 5/8" X 20 GA. METAL STUD FRAMING ATTACHED TO LANDLORD'S SHELL BUILDING STRUCTURE FOR LATERAL STABILITY ONLY. DO NOT COMPROMISE THE STRUCTURAL INTEGRITY OR FIRE RATINGS OF LANDLORD COMPONENTS. ALL CONNECTIONS TO STRUCTURE TO BE COORDINATED W/ LANDLORD REPRESENTATIVE. TYP. NO ATTACHMENT TO ROOF DECK. ALL ATTACHMENTS MUST BE TO TOP CHORD OF JOIST OR FLANGE OF BEAM ONLY (THIS APPLIES TO STUD FRAMING, KICKERS, UNISTRUT ETC).
26. GRAPHIC PLAQUES.
27. OVERHEAD ROLLING GRILLE COIL ASSEMBLY CONNECTED TO TUBE SUPPORTS. G.C. TO COORDINATE INSTALLATION WITH OTHER TRADES. INSTALL PER MANUFACTURER'S SPECIFICATIONS .
28. OVERHEAD ROLLING GRILLE GUIDE AND TUBE SUPPORTS. G.C. TO COORDINATE WITH ROLLING GRILLE MANUFACTURER FOR REQUIRED SIZING AND CONNECTIONS OF ROLLING GRILLE TUBE STEEL. ATTACHMENT TO LANDLORD STRUCTURE SHALL BE FOR LATERAL STABILITY ONLY. GRILLE ASSEMBLY SHALL BE FLOOR SUPPORTED.
29. G.C. TO ALIGN NEW TENANT FINISHES WITH EXISTING BUILDOUT FINISHED SURFACE. ENSURE SMOOTH EVEN SEAMLESS TRANSITION. PREPARE AS REQUIRED FOR NEW TENANT FINISHES.
30. ADD 3/4" FRT PLYWOOD BLOCKING OR BACKER AT BLADE SIGN LOCATION. COORDINATE WITH SIGN COMPANY.
31. NOT USED.
32. NOT USED.
33. SUSPENDED VM MERCHANDISING GRID REFER TO 3/A3.0
34. EXISTING DEMISING WALL TO REMAIN.

GENERAL NOTES

1. ALL BLOCKING SHALL BE F.R.T.W AND/OR NON-COMBUSTIBLE MATERIAL AS REQUIRED BY CODE.
2. ALL PLYWOOD SHEATHING AND/OR BACKING SHALL BE F.R.T.W. AS REQUIRED BY CODE.
3. SIGNAGE SHOWN FOR REFERENCE ONLY. ALL FINAL SIGN SHOP DRAWINGS TO BE SUBMITTED UNDER SEPARATE SUBMITTAL AND PERMIT.
4. ATTACHMENT TO LANDLORD BULKHEAD IS NOT PERMITTED. ALL SUPPORT SHALL BE TO BUILDING STRUCTURE.
5. G.C. TO ENSURE UNOBSTRUCTED ACCESS EXISTS TO THE REAR OF ANY SIGNAGE WIRING AN TRANSFORMERS FOR INSTALLATION AND MAINTENANCE PURPOSES.
6. ANY ACCESS PANEL REQUIRED ARE TO BE 24" x 24".

BROWN SHOE COMPANY, INC.
8300 Maryland Ave.
Clayton, MO 63105
314/854-4000
BROWN SHOE COMPANY

09/15/2014	BID & PERMIT
09/26/2014	LANDLORD COMMENTS

TRICARICO
Tricarico Architecture and Design PC
502 Valley Road Wayne, NJ 07470
T (973) 692-0222 F (973) 692-0223
www.tricarico.com

PROHIBITION ON REUSE:
THIS DOCUMENT, INCLUDING ALL NOTES, DRAWINGS AND SPECIFICATIONS, WAS PREPARED FOR THE BROWN SHOE COMPANY, INC. (BROWN SHOE) AND IS THE PROPERTY OF THE BROWN SHOE. BROWN SHOE RETAINS ALL COMMON LAW, STATUTORY AND OTHER RIGHTS, INCLUDING COPYRIGHT, IN THE DOCUMENT. THE DOCUMENT MAY NOT BE USED, REPRODUCED OR DISTRIBUTED BY ANY PERSON OR ENTITY FOR ANY PURPOSE WITHOUT THE WRITTEN PERMISSION OF BROWN SHOE. ALL RIGHTS ARE RESERVED.

COPYRIGHT NOTICE:
THESE DRAWINGS AND SPECIFICATIONS ARE SUBJECT TO COPYRIGHT PROTECTION AS AN "ARCHITECTURAL WORK" UNDER SECTION 102 OF THE COPYRIGHT ACT OF 1990, 17 U.S.C. AS AMENDED. DESIGNERS: TRICARICO ARCHITECTURE AND DESIGN, P.C. 502 VALLEY ROAD, WAYNE, NJ 07470. COPYRIGHT © 2014 TRICARICO ARCHITECTURE AND DESIGN, P.C.

FAMOUS footwear
STORE #3406
NORTH POINT MALL
1000 NORTH POINT CIR SUITE 2208
ALPHARETTA, GA 30022

DESIGNED BY:	BF
DRAWN BY:	MHA
CHECKED BY:	MW
DATE:	09/26/14
PROTO. VER.:	010413
PROJECT NO:	140341

ELEVATIONS/ PLANS

A6.0

COPYRIGHT © 2014 BY BROWN SHOE, INC. PROTOTYPE VERSION: 010413

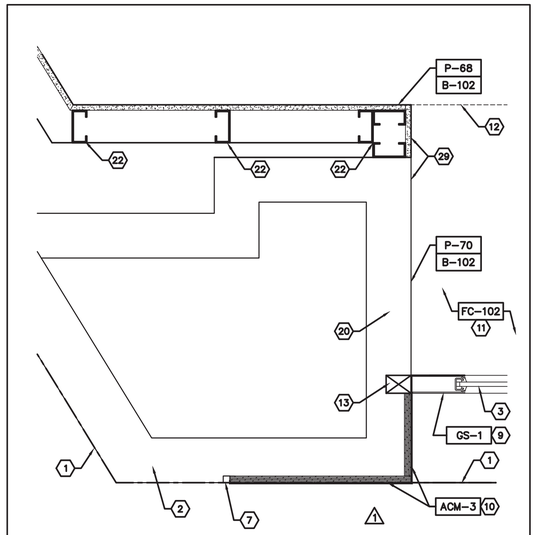

1 A6.1 STOREFRONT DETAIL
SCALE: 1 1/2" = 1'-0"

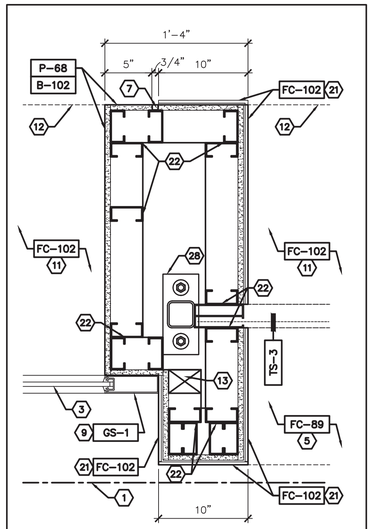

2 A6.1 STOREFRONT DETAIL
SCALE: 1 1/2" = 1'-0"

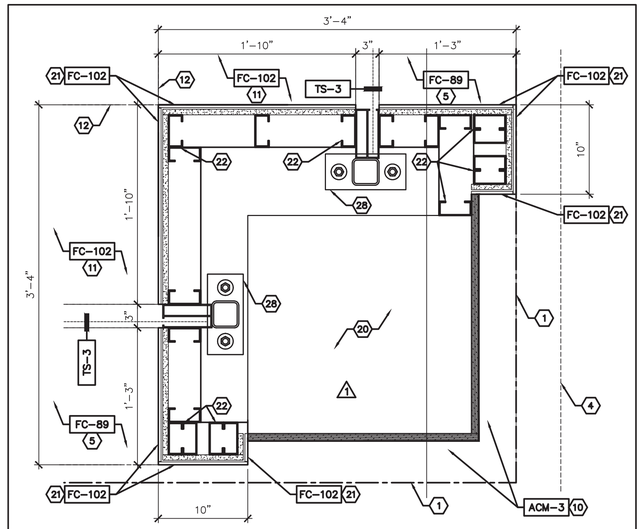

3 A6.1 STOREFRONT DETAIL
SCALE: 1 1/2" = 1'-0"

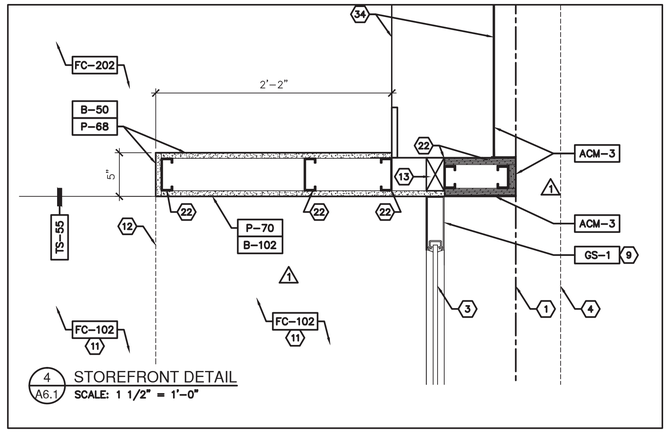

4 A6.1 STOREFRONT DETAIL
SCALE: 1 1/2" = 1'-0"

GENERAL NOTES

1. ALL BLOCKING SHALL BE F.R.T.W AND/OR NON-COMBUSTIBLE MATERIAL AS REQUIRED BY CODE.
2. ALL PLYWOOD SHEATHING AND/OR BACKING SHALL BE F.R.T.W. AS REQUIRED BY CODE.
3. SIGNAGE SHOWN FOR REFERENCE ONLY. ALL FINAL SIGN SHOP DRAWINGS TO BE SUBMITTED UNDER SEPARATE SUBMITTAL & PERMIT.
4. ATTACHMENT TO LANDLORD BULKHEAD IS NOT PERMITTED. ALL SUPPORT SHALL BE TO BUILDING STRUCTURE.
5. G.C. TO ENSURE UNOBSTRUCTED ACCESS EXISTS TO THE REAR OF ANY SIGNAGE WIRING AN TRANSFORMERS FOR INSTALLATION AND MAINTENANCE PURPOSES.
6. ANY ACCESS PANEL REQUIRED ARE TO BE 24" x 24".

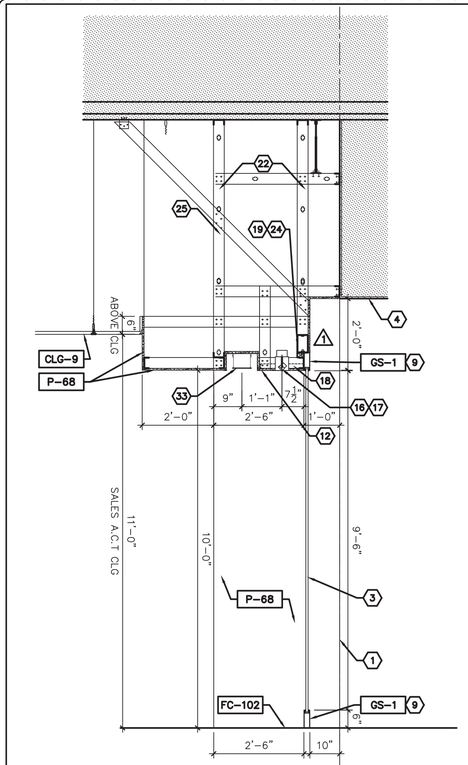

NOTE: ATTACHMENT TO LANDLORD STRUCTURE FOR LATERAL SUPPORT ONLY. G.C. TO COORDINATE THE METHOD OF ATTACHMENT ON SITE WITH MALL OPERATIONS.

FINISH 6" INTO GRILLE POCKET WITH GYP. BD. AND PAINT TO MATCH SURROUNDING FINISHES. GRILLE TRACK TO BE FLUSH.

5 A6.1 STOREFRONT SECTION
SCALE: 1/2" = 1'-0"

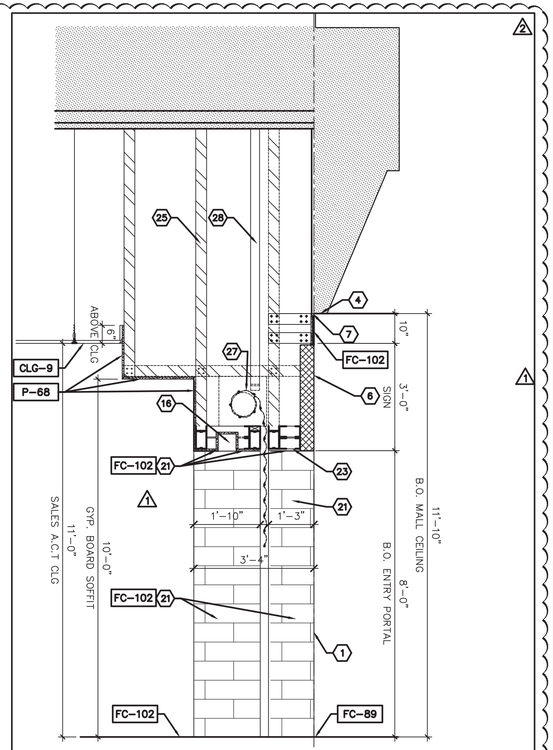

NOTE: ATTACHMENT TO LANDLORD STRUCTURE FOR LATERAL SUPPORT ONLY. G.C. TO COORDINATE THE METHOD OF ATTACHMENT ON SITE WITH MALL OPERATIONS.

ANY ATTACHMENTS TO LANDLORD'S STRUCTURE SHALL BE FROM TOP CHORD OF JOIST. NO ATTACHMENT TO THE ROOF DECK IS PERMITTED.

NOTE: ROLLING GRILLE DOOR IS TO REMAIN OPEN DURING OCCUPANCY.

6 A6.1 STOREFRONT SECTION
SCALE: 1/2" -1'-0"

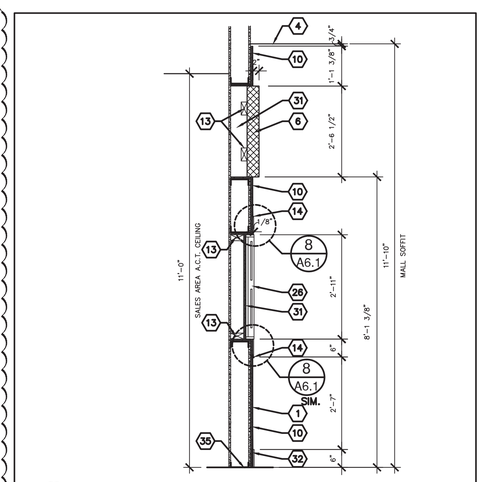

7 A6.1 WALL SECTION
SCALE: 1/2" -1'-0"

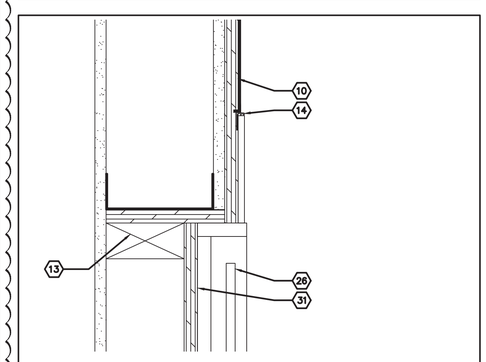

8 A6.1 ACM TO TILE TRANSITION
SCALE: 3" -1'-0"

KEYED NOTES

1. LEASE LINE LOCATION. VERIFY LOCATION AT STOREFRONT WITH ONSITE LANDLORD MANAGEMENT PRIOR TO CONSTRUCTION START.
2. LANDLORD'S NEUTRAL PIER. G.C. TO PRESERVE AND PROTECT DURING DEMOLITION AND CONSTRUCTION.
3. 1/2" CLEAR TEMPERED GLAZING. BUTT JOINT GLAZING WITH 1/4" MAX. SPACING.
4. EXISTING MALL BULKHEAD TO REMAIN. G.C. TO PRESERVE AND PROTECT DURING DEMOLITION AND CONSTRUCTION.
5. G.C. TO EXTEND MALL TILE FROM LEASE LINE TO ROLLING GRILLE CLOSURE LINE AND OR STOREFRONT.
6. RECESSED RED PANEL INTERNALLY ILLUMINATED WITH PUSH-THRU ACRYLIC LETTERS AND LOGO STOREFRONT SIGNAGE BY SIGN VENDOR, REFER TO CONTACTS, A1.0 SIGNAGE IS SHOWN FOR REFERENCE ONLY AND IS SUBMITTED UNDER SEPARATE SUBMITTAL AND PERMIT.
7. EXISTING 3/4" METAL CHANNEL REVEAL PAINTED BLACK AS REQUIRED.
8. ACM SYSTEM SEAM LOCATION, (FIELD VERIFY) BUTT JOINT. SYSTEM MUST BE BLIND FASTENED NO VISIBLE MEANS OF ATTACHMENT PERMITTED.
9. NEW 6" HIGH GLAZING BASE, SIDE AND HEAD. REFER TO FINISH GS-1, SHEET A5.0
10. ONE LAYER 1/2" PLYWOOD OVER 5/8" GYPSUM WALL BOARD AT ALL LOCATIONS RECEIVING ALUMINUM COMPOSITE METAL (ACM-3). ELEMENT ATTACHED PER MANUFACTURER'S SPECIFICATIONS. PREPARE ALL PLYWOOD SURFACES AND JOINTS PER MANUFACTURER'S REQUIREMENTS AND APPLICATION INSTRUCTIONS BY G.C.
11. STOREFRONT FLOOR TILE, REFER TO SPECIFICATIONS ON SHEET A5.0
12. LINE OF NEW GYPSUM BOARD SOFFIT ABOVE. REFER TO SHEET A3.0 FOR SOFFIT HEIGHTS.
13. FIRE RETARDANT TREATED WOOD BLOCKING AS REQUIRED.
14. BRUSHED CHROME ANODIZED ALUMINUM TRIM PIECE AT TILE EDGES ADJACENT TO ACM PANELS – SCHLUTER-JOLLY-ACGB-3/8"
15. PROVIDE ADDITIONAL METAL FRAMING AT LOCATION FOR SIGNAGE.
16. LIGHT FIXTURE, REFER TO PLAN AND SPECIFICATIONS ON SHEET A3.0 & E3.0
17. MINIMUM FRAMING SPACE FOR FIXTURES = 14¼" REFER TO MFR. PREDICATIONS
18. INTERMEDIATE FRAMING BETWEEN /BEYOND FIXTURES
19. DOUBLE 6" X 18 GA. METAL JOIST HEADER, WELDED TOGETHER, BEARING DIRECTLY ON STUDS BELOW. ALL FASTENING TO BE PER MANUFACTURER'S RECOMMENDATIONS.
20. EXISTING BUILDOUT TO REMAIN. G.C. TO PATCH AND REPAIR AS REQUIRED FOR NEW TENANT FINISHES.
21. ONE LAYER CATEGORY 3 HEAVY DUTY IMPACT RESISTANT 5/8" FIRE CODE GYPSUM WALL BOARD ATTACHED PER MANUFACTURER'S SPECIFICATIONS. TAPE AND SAND ALL JOINTS SMOOTH.
22. 3 5/8" X 20 GA. METAL STUD FRAMING @ 16" O.C. TYPICAL (U.N.O.)
23. 3 5/8" X 20 GA. METAL STUD FRAMED SOFFIT. USE (4) #10 SMS TYP. AT ALL LIGHT GAGE METAL FRAMED CONNECTIONS
24. PROVIDE DBL WELDED STUDS AT ALL BOXED HEADER BEARING LOCATIONS, SEE KEYNOTE # 19
25. 3 5/8" X 20 GA. METAL STUD FRAMING ATTACHED TO LANDLORD'S SHELL BUILDING STRUCTURE FOR LATERAL STABILITY ONLY. DO NOT COMPROMISE THE STRUCTURAL INTEGRITY OR FIRE RATINGS OF LANDLORD COMPONENTS. ALL CONNECTIONS TO STRUCTURE TO BE COORDINATED W/ LANDLORD REPRESENTATIVE. TYP. NO ATTACHMENT TO ROOF DECK. ALL ATTACHMENTS MUST BE TO TOP CHORD OF JOIST OR FLANGE OF BEAM ONLY (THIS APPLIES TO STUD FRAMING, KICKERS, UNISTRUT ETC).
26. GRAPHIC PLAQUES.
27. OVERHEAD ROLLING GRILLE COIL ASSEMBLY CONNECTED TO TUBE SUPPORTS. G.C. TO COORDINATE INSTALLATION WITH OTHER TRADES. INSTALL PER MANUFACTURER'S SPECIFICATIONS .
28. OVERHEAD ROLLING GRILLE GUIDE AND TUBE SUPPORTS. G.C. TO COORDINATE WITH ROLLING GRILLE MANUFACTURER FOR REQUIRED SIZING AND CONNECTIONS OF ROLLING GRILLE TUBE STEEL. ATTACHMENT TO LANDLORD STRUCTURE SHALL BE FOR LATERAL STABILITY ONLY. GRILLE ASSEMBLY SHALL BE FLOOR SUPPORTED.
29. G.C. TO ALIGN NEW TENANT FINISHES WITH EXISTING BUILDOUT FINISHED SURFACE. ENSURE SMOOTH EVEN SEAMLESS TRANSITION. PREPARE AS REQUIRED FOR NEW TENANT FINISHES.
30. ADD 3/4" FRT PLYWOOD BLOCKING OR BACKER AT BLADE SIGN LOCATION. COORDINATE WITH SIGN COMPANY.
31. COORDINATE ROUGH OPENING WITH SIGN SHOP DRAWINGS AND VENDOR AS REQUIRED FOR PROPER PLACEMENT AND ADJUSTMENT OF SIGNAGE AND PLAQUE BOXES.
32. MALL BASE PROVIDED AND INSTALLED BY G.C.. COORDINATE WITH LANDLORD REPRESENTATIVE AS REQUIRED.
33. SUSPENDED VM MERCHANDISING GRID REFER TO 3/A3.0
34. EXISTING WALL TO REMAIN. G.C. TO REMOVE EXISTING TENANT FINISHES AND PREPARE WALL FOR APPLICATION OF NEW FINISHES.
35. 6" METAL STUD AT 16" O.C. TO 6" ABOVE ADJACENT CEILING

BROWN SHOE COMPANY, INC.
8300 Maryland Ave.
Clayton, MO 63105
314/854-4000
BROWN SHOE COMPANY

09/15/2014	BID & PERMIT
09/26/2014	1 LANDLORD COMMENTS

TRICARICO©
Tricarico Architecture and Design PC
502 Valley Road Wayne, NJ 07470
T (973) 692-0222 F (973) 692-0223
www.tricarico.com

DISCLAIMER ON ISSUE: THIS DOCUMENT IS A TYPE OF WORK AND SPECIFICATIONS WAS PREPARED BY US OR ON BEHALF OF OUR CLIENT, AND IS TRANSMITTED TO AUTHORITIES HAVING JURISDICTION AND CONTRACTORS AS THE ARCHITECT'S INSTRUMENT OF SERVICE.

THE ARCHITECT'S DRAWINGS AND SPECIFICATIONS ARE AND SHALL REMAIN THE PROPERTY OF THE FIRM. NO PART OF THIS DOCUMENT MAY BE REPRODUCED OR TRANSMITTED IN ANY FORM OR BY ANY MEANS, ELECTRONIC OR OTHERWISE, WITHOUT THE WRITTEN AUTHORIZATION OF BROWN SHOE COMPANY, INC.

COPYRIGHT NOTICE:
THESE DRAWINGS AND SPECIFICATIONS ARE SUBJECT TO COPYRIGHT PROTECTION AS AN "ARCHITECTURAL WORK" UNDER SECTION 102 OF THE COPYRIGHT ACT, 17 U.S.C. AS AMENDED DECEMBER 1990. KNOWN AS THE ARCHITECTURAL WORKS PROTECTION ACT OF 1990. THE RIGHTS OF THE ARCHITECT INCLUDE, BUT ARE NOT LIMITED TO, THE CONTROL OF CONSTRUCTION, THE DISTRIBUTION OF NATIONAL CAPITOL, THE VISUAL ARTS SUBJECT TO THE FEDERAL COPYRIGHT PROTECTION, AND THE DISPLAY OF COPIES AND EXHIBITS TO THE PUBLIC VIEW.

FAMOUS footwear
STORE #3406
NORTH POINT MALL
1000 NORTH POINT CIR SUITE 2208
ALPHARETTA, GA 30022

DESIGNED BY:	BF
DRAWN BY:	MHA
CHECKED BY:	MW
DATE:	09/26/14
PROTO. VER.:	010413
PROJECT NO:	140341

DETAILS/ SECTIONS

A6.1

COPYRIGHT © 2014 BY BROWN SHOE, INC. PROTOTYPE VERSION: 010413

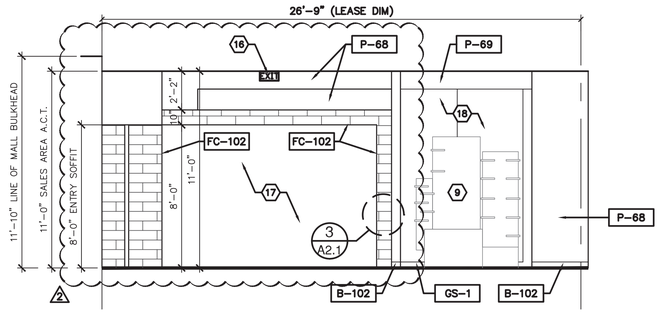

1 A6.2 INTERIOR ELEVATION
SCALE: 1/4" = 1'-0"

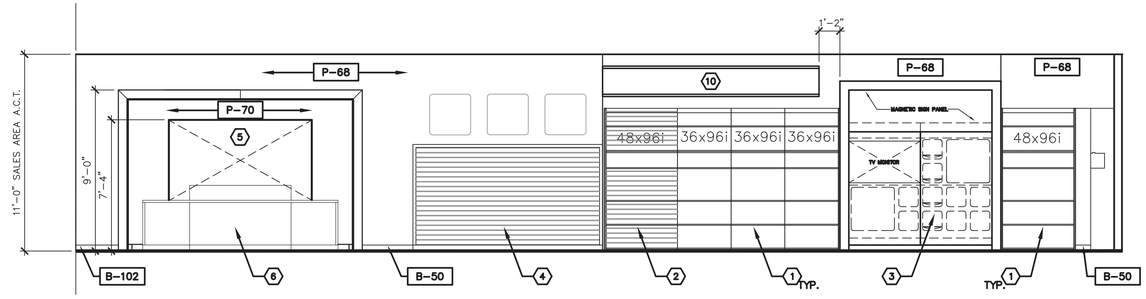

2 A6.2 INTERIOR ELEVATION
SCALE: 1/4" = 1'-0"

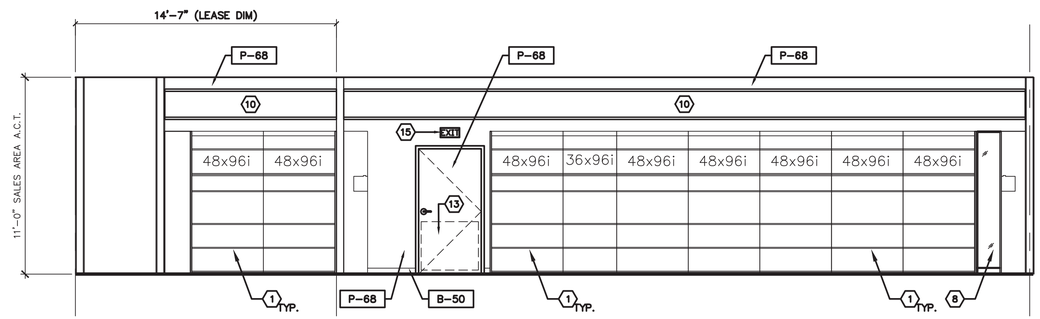

3 A6.2 INTERIOR ELEVATION
SCALE: 1/4" = 1'-0"

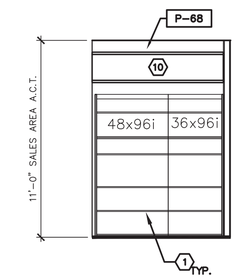

4 A6.2 INTERIOR ELEVATION
SCALE: 1/4" = 1'-0"

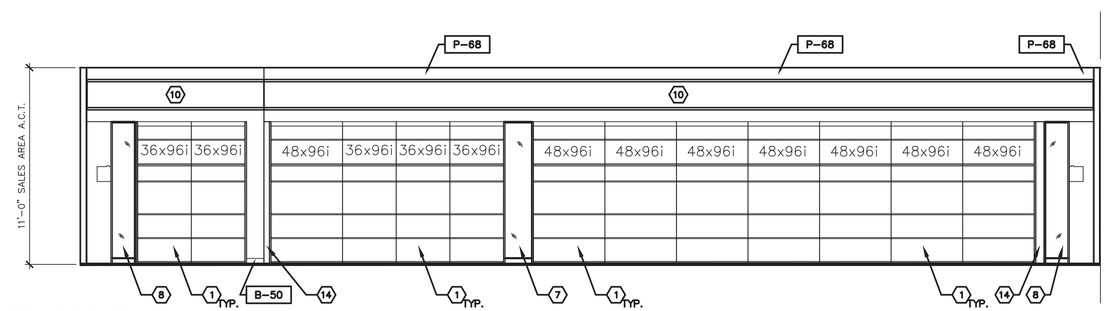

5 A6.2 INTERIOR ELEVATION
SCALE: 1/4" = 1'-0"

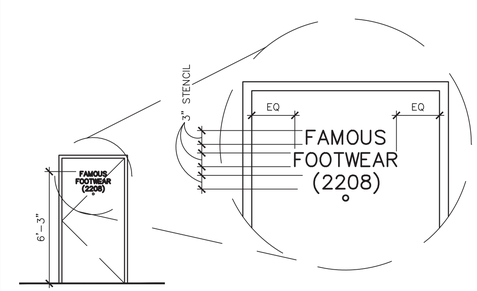

7 A6.2 REAR DOOR ELEVATION
SCALE: 1/4" = 1'-0"

KEYNOTES

1. 24"W, 36"W, or 48"W x 96"H ILLUMINATED DISPLAY SHELF – TYPICAL (AS SHOWN ON ELEVATIONS)
2. 48"w x 96"h SLATBACK UNITS (AS SHOWN ON ELEVATIONS)
3. VIDEO FOCAL WALL – REFER TO DETAIL 1/A2.1
4. ACCESSORY WALL W/ GRAPHIC PLAQUES. REFER TO DETAIL 5/A4.0
5. WALL MOUNTED BRAND/EXIT WALL. REFER TO DETAIL 3/A2.1
6. CASHWRAP W/ SOCK BIN
7. MIRRORN UNIT, REFER TO DETAIL 1/A7.0
8. CORNER MIRROR UNIT, REFER TO DETAIL 1/A7.0
9. FREE-STANDING VICTORY FIXTURES ON CASTERS
10. GRAPHIC TRACK, REFER TO FIXTURE LAYOUT SHEET A4.0
11. NOT USED.
12. NOT USED
13. FULL WIDTH x 34" HIGH ALUM. KICK PLATE
14. NEW SPACER
15. WALL MOUNTED EXIT SIGN
16. CEILING MOUNTED EXIT SIGN
17. OVERHEAD ENTRY/EXIT OPENING WITH MOTORIZED ROLLING GRILLE
18. STOREFRONT GLAZING SYSTEM

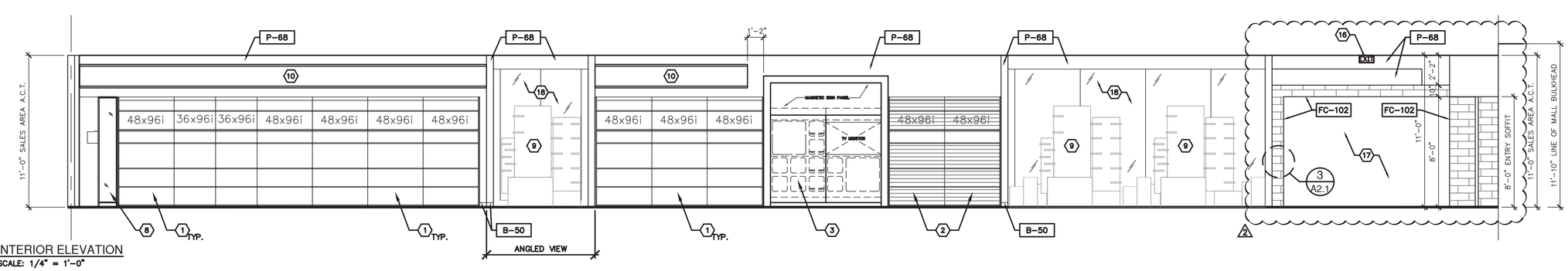

6 A6.2 INTERIOR ELEVATION
SCALE: 1/4" = 1'-0"

BROWN SHOE COMPANY, INC.
8300 Maryland Ave.
Clayton, MO 63105
314/854-4000
BROWN SHOE COMPANY

09/15/2014	BID & PERMIT	
09/26/2014	LANDLORD COMMENTS	1

TRICARICO©
Tricarico Architecture and Design PC
502 Valley Road Wayne, NJ 07470
T (973) 692-0222 F (973) 692-0223
www.tricarico.com

DISTRIBUTION OF REVISED, SEALED OR UNSEALED PLANS, DRAWINGS AND SPECIFICATIONS, MADE PERIODICALLY OR AT ANY TIME, BY ELECTRONIC MEDIA OR OTHERWISE, TO ANY AND ALL PARTIES, PERMITTED AND CONTRACTORS, IN THE ORDINARY COURSE OF THE PROJECT, SHALL NOT CONSTITUTE A WAIVER OF THE ORIGINAL WRITTEN AGREEMENT BETWEEN THE ARCHITECT AND THE OWNER.

THESE DRAWINGS AND SPECIFICATIONS ARE AND SHALL REMAIN THE PROPERTY OF THE BROWN SHOE COMPANY, INC. THE USE OF THESE DRAWINGS AND SPECIFICATIONS BY ANYONE FOR ANY PURPOSE WITHOUT THE WRITTEN AUTHORIZATION OF BROWN SHOE COMPANY, INC. IS PROHIBITED.

COPYRIGHT NOTICE:
THESE DRAWINGS AND SPECIFICATIONS ARE SUBJECT TO COPYRIGHT PROTECTION AS AN "ARCHITECTURAL WORK" UNDER SECTION 102 OF THE COPYRIGHT ACT OF 1990, AS AMENDED. DESIGNERS HAVE, KNOWN AS THE "ARCHITECTURAL WORKS COPYRIGHT PROTECTION ACT" (AWCPA) ADOPTED THE FOLLOWING DEFINITION OF CONSTRUCTION, THE OVERALL FORM, ARRANGEMENT, AND COMPOSITION OF SPACES AND ELEMENTS OF THE DESIGN.

FAMOUS footwear
STORE #3406
NORTH POINT MALL
1000 NORTH POINT CIR SUITE 2208
ALPHARETTA, GA 30022

DESIGNED BY:	BF
DRAWN BY:	MHA
CHECKED BY:	MW
DATE:	09/26/14
PROTO. VER.:	010413
PROJECT NO:	140341

INTERIOR ELEVATIONS

A6.2

COPYRIGHT © 2014 BY BROWN SHOE, INC. PROTOTYPE VERSION: 010413

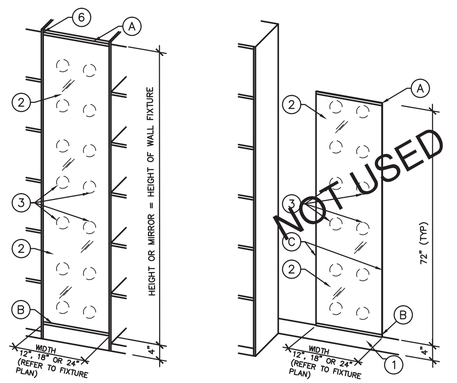

MIRROR UNIT / CORNER MIRROR UNIT (13)
PROVIDED BY FIXTURE CONTRACTOR
INSTALLED BY FIXTURE INSTALLATION CONTRACTOR

WALL MIRROR (13)
PROVIDED BY G.C.
INSTALLED BY G.C.

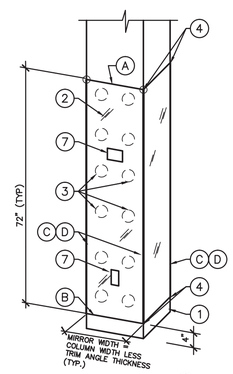

COLUMN ENCLOSURE MIRRORS (13)
PROVIDED BY G.C.
INSTALLED BY G.C.

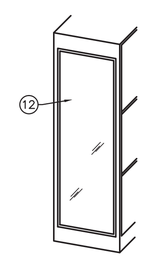

FLOOR BIN MIRROR (13)
PROVIDED BY FIXTURE CONTRACTOR
INSTALLED BY FIXTURE INSTALLATION CONTRACTOR

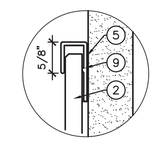

DETAIL "A"
TOP

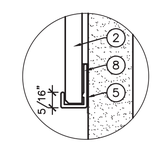

DETAIL "B"
BOTTOM

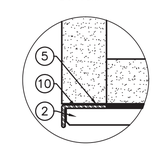

DETAIL "C"
CORNER/EDGE

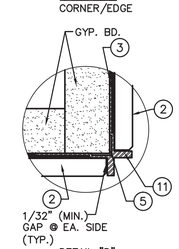

DETAIL "D"
CORNER

1. –WALL BASE – VERIFY EXACT HEIGHT, REFER TO SHEET A5.0 FOR FINISH SPECIFICATIONS.
2. – 1/4" COPPER BACKED MIRROR WITH POLISHED EDGES
3. –ADHERE MIRROR TO WALL OR FIXTURE PANEL SURFACE WITH PALMER "MIRRO–MASTIC"– NO EXCEPTIONS. MASTIC CAN NOT BE APPLIED DIRECTLY TO PAINTED DRYWALL. APPLY PER MANUFACTURER'S WRITTEN APPLICATION INSTRUCTIONS, INCLUDING ANY REQUIRED SURFACE PREPARATION– NO EXCEPTIONS.
4. –G.C. TO MEASURE EACH COLUMN ENCLOSURE HORIZONTALLY AT TOP OF WALL BASE AND AT A HEIGHT OF 72". CUT MIRROR WIDTH TO 3/16" LESS THAN THE SMALLEST OF THE TWO MEASUREMENTS. TYPICAL FOR EACH SIDE OF COLUMN ENCLOSURE TO RECEIVE MIRROR.
5. – GLUE TRIM ANGLE IN PLACE WITH LIQUID NAILS ADHESIVE #LN–925. GLUE MIRROR IN PLACE AS INDICATED IN NOTE #3
6. –TOP OF MIRROR EQUALS HEIGHT OF ADJACENT WALL FIXTURES.
7. –IF APPLICABLE; MEASURE AND CUT EXACT LOCATION OF THERMOSTATS, OUTLETS, SENSORS ETC. (COVER PLATES AND/OR DEVICE FACES SHALL CONCEAL ANY CUT EDGES IN THE MIRROR).
8. –BOTTOM J–CHANNEL: STYLMARK #420068–018 (NO SUBSTITUTIONS), SCREWED AND GLUED TO WALL OR PANEL (USE AT ALL LOCATIONS EXCEPT FLOOR BIN MIRRORS)
9. –TOP J–CHANNEL: STYLMARK #420107–018 (NO SUBSTITUTIONS), SCREWED AND GLUED TO WALL OR PANEL (USE AT ALL LOCATIONS EXCEPT FLOOR BIN MIRRORS). CONFIRM "TOP" CHANNEL IS LOCATED AT THE TOP.
10. –STYLMARK #120059–018 TRIM ANGLE (NO SUBSTITUTIONS) AT SINGLE MIRROR CONDITIONS,
11. –STYLMARK 120058–018 TRIM (NO SUBSTITUTIONS) AT CONDITIONS WHERE TWO MIRRORS MEET AT A CORNER
12. –PRE–FRAMED MIRROR HUNG FROM SLATWALL END PANELS
13. –REFER TO SHEET A4.0 FOR SIZES, QUANTITIES AND LOCATIONS.

1 / A7.0 MIRROR INSTALLATION DETAILS
SCALE: NONE

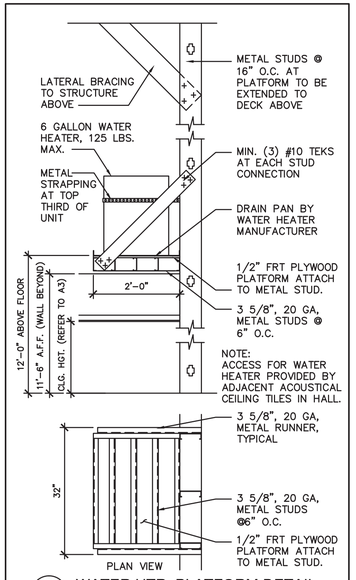

2 / A7.0 WATER HTR. PLATFORM DETAIL
SCALE: NOT TO SCALE

COPYRIGHT © 2014 BY BROWN SHOE, INC.

PROTOTYPE VERSION: 010413

09/15/2014	BID & PERMIT
09/26/2014	1 LANDLORD COMMENTS

BROWN SHOE COMPANY, INC.
8300 Maryland Ave.
Clayton, MO 63105
314/854-4000

BROWN SHOE COMPANY

TRICARICO®
Tricarico Architecture and Design PC
502 Valley Road Wayne, NJ 07470
T (973) 692-0222 F (973) 692-0223
www.tricaricoc.com

PROHIBITION ON BIDDING
THIS DOCUMENT IS NOT A PLANS AND SPECIFICATIONS WAS PREPARED FOR USE ON THE PROJECT DESIGNATED HEREIN. ANY REPRODUCTION OF THE PLANS AND SPECIFICATIONS OR ANY PART THEREOF FOR USE ON ANY OTHER PROJECT IS PROHIBITED AND CONTRARY TO LAW AND ACCEPTED ARCHITECTURAL PRACTICE.

THE PLANS, DRAWINGS, AND SPECIFICATIONS ARE AND SHALL REMAIN THE PROPERTY OF THE FIRM. NO PART OF THE PLANS, DRAWINGS, AND SPECIFICATIONS SHALL BE REPRODUCED IN ANY FORM WITHOUT THE WRITTEN APPROVAL OF BROWN SHOE COMPANY, INC.

COPYRIGHT NOTICE:
THE PLANS, DRAWINGS, SPECIFICATIONS ARE SUBJECT TO COPYRIGHT PROTECTION AS AN "ARCHITECTURAL WORK" UNDER SECTION 102 OF THE COPYRIGHT ACT, 17 U.S.C. AS AMENDED DECEMBER 1990. SECTION 120 OF THE COPYRIGHT ACT, 17 U.S.C. AS AMENDED DECEMBER 1990, EXTENDS TO OWNERS OF ARCHITECTURAL WORKS CERTAIN RIGHTS, INCLUDING THE RIGHT TO MAKE, DISTRIBUTE, OR DISPLAY PICTURES, PAINTINGS, PHOTOGRAPHS, OR OTHER PICTORIAL REPRESENTATIONS OF THE WORK, TO THE EXTENT THE ARCHITECTURAL WORK IS VISIBLE FROM PUBLIC PLACES. THE DESIGN OF SPACES AND ELEMENTS OF THE DESIGN.

FAMOUS footwear
STORE #3406
NORTH POINT MALL
1000 NORTH POINT CIR SUITE 2208
ALPHARETTA, GA 30022

DESIGNED BY:	BF
DRAWN BY:	MHA
CHECKED BY:	MW
DATE:	09/26/14
PROTO. VER.:	010413
PROJECT NO:	140341

CONST. DETAILS

A7.0

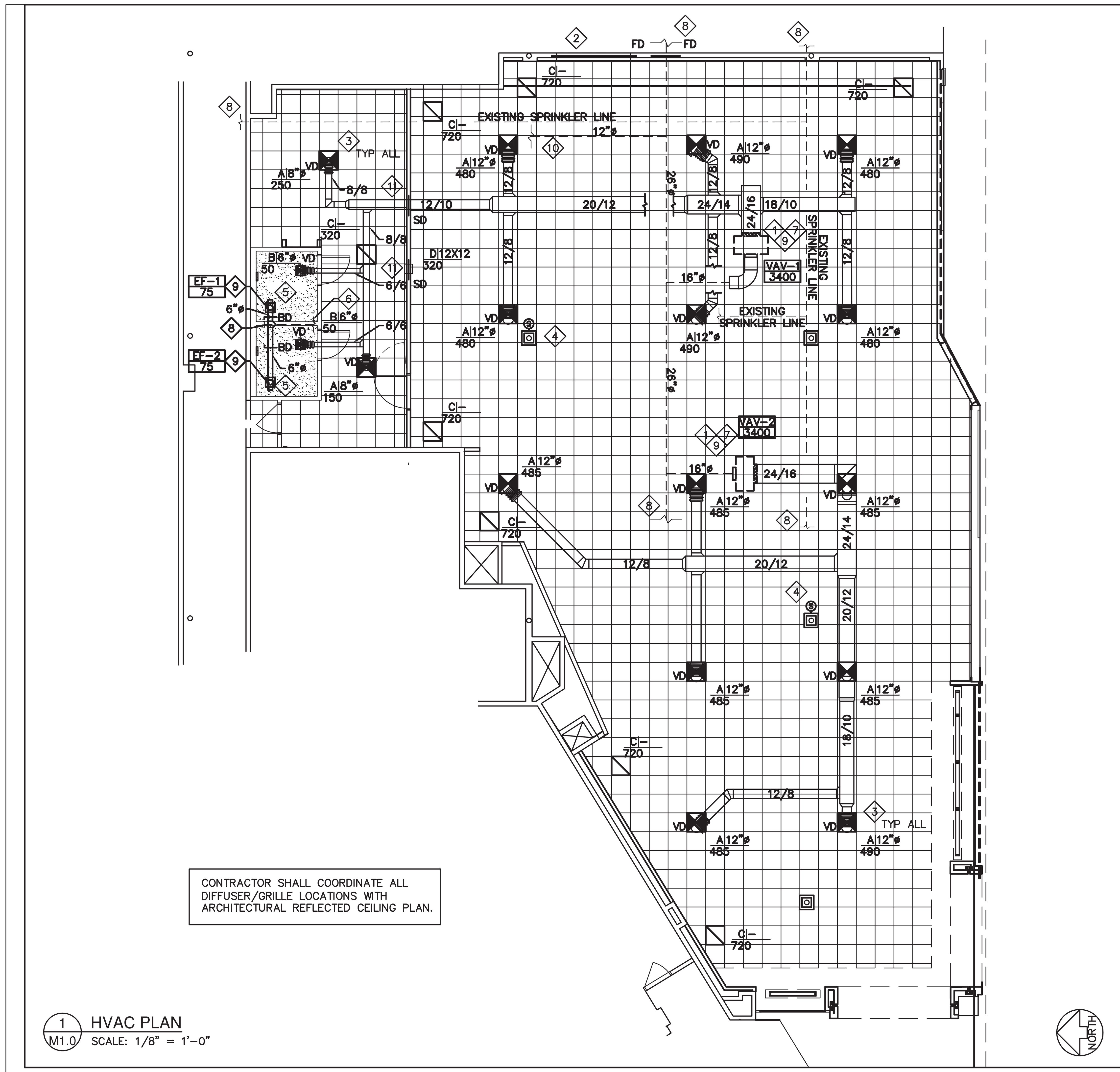

1 / M1.0 — HVAC PLAN
SCALE: 1/8" = 1'–0"

GENERAL MEP NOTES

1. CONTRACTOR TO COMPLY WITH BUILDING / LANDLORD CRITERIA, DESIGN CRITERIA, STANDARD PRACTICES AND LOCAL CODE / ORDINANCE REQUIREMENTS WHEN COMMENCING WORK. THESE REQUIREMENTS SHALL SUPERSEDE ANY AND ALL INFORMATION ON THE DRAWINGS UNLESS AGREEMENT TO THE CONTRARY DURING THE BID PROCESS WHEREAS THE CLIENT WILL BE EXCLUDED FROM INCURRING ANY ADDITIONAL COSTS. THE GENERAL CONTRACTOR SHALL OVERSEE THE EXECUTION AND COMPLETION OF THESE ITEMS ALSO AT NO ADDITIONAL COST TO THE CLIENT. ANY DISCREPANCIES OR INCONSISTENCIES CONCERNING THESE REQUIREMENTS AFTER THE PROJECT IS AWARDED SHALL BE BROUGHT TO THE ATTENTION OF THE BUILDING OWNER AND TENANT FOR APPROVAL PRIOR TO COMMENCING WORK. ANY UPGRADES TO THE DESIGN / SCOPE OF WORK TO CONFORM TO THE PRECEDING REQUIREMENTS AT THIS JUNCTURE WILL THEN BE AT THE TENANT'S EXPENSE.
2. SINCE CODES VARY ACROSS REGIONS, IT IS THE GENERAL AND SUBCONTRACTOR'S RESPONSIBILITY TO REVIEW THE CONSTRUCTION DRAWINGS DURING BIDDING AND INCLUDE IN THEIR BID ANY ALTERNATE CODE RELATED RECOMMENDATIONS / DETAILS OR SPECIFICATIONS. IF THERE ARE ANY PROPOSED ALTERATION EQUIPMENT / INSTALLATION CHANGES, THEN THE COSTS FOR THESE CHANGES ARE TO BE EQUAL TO OR GREATER IN VALUE TO THE ITEMS AND QUANTITIES MENTIONED IN THE ORIGINAL CONSTRUCTION DRAWINGS AND THE CHANGES SHALL BE SUBMITTED TO THE ARCHITECT / ENGINEER FOR REVIEW AND APPROVAL. CONTRACTORS WHO DO NOT ADHERE TO THIS REQUIREMENT WILL BE RESPONSIBLE FOR INCURRING THE ADDED COSTS REQUIRED FOR THE DESIGN TO COMPLY WITH LOCAL CODE.

HVAC Controls tie-in by Waypoint Systems
- see contact information on cover sheet.

MECHANICAL SYMBOL LEGEND

24"x24" HVAC DIFFUSER	A|8"ø / 200 (4): A = TYPE; 8"ø = NECK SIZE; 200 = CFM; (4) = QUANTITY
24"x24" HVAC RETURN AIR GRILLE	
EXHAUST FAN	RTU 2 — EQUIPMENT TAG
EXHAUST THROUGH ROOF	
THERMOSTAT	CONNECTION TO EXISTING
REMOTE TEMPERATURE SENSOR	GAS METER
SMOKE DETECTOR	PIPE BREAK
SUPPLY DUCTWORK	PIPE CAP
DUCTWORK TO BE REMOVED	PIPE DOWN
BALL VALVE	PIPE UP
CHECK VALVE	PIPE TEE DOWN
GATE VALVE	PIPE UNION
2–WAY VALVE	FLOW ARROW
3–WAY VALVE	PUMP
BUTTERFLY VALVE	PRSSURE GAUGE
CIRCUIT BALANCING VALVE	THERMOMETER

GENERAL NOTES

1. REFER TO SPECIFICATIONS ON SP SHEETS FOR ADDITIONAL REQUIREMENTS; GENERAL, PRODUCTS EXECUTION. EMPLOY LANDLORD'S APPROVED CONTRACTOR TO INSTALL VAV CONTROLS.
2. THERMOSTAT (NOT SHOWN) FOR EACH HVAC UNIT CONTROL SHALL BE LIGHTSTAT MULTISTAGE THERMOSTAT IF ALLOWED BY LANDLORD AND SHALL BE MOUNTED ON LIGHTSTAT ENERGY PANEL. LABEL THERMOSTAT AND SENSOR FOR EACH VAV. REFER TO SHEET A1.0 FOR LIGHTSTAT CONTACT INFORMATION. COORDINATE WITH LANDLORD PRIOR TO BID. CONTRACTOR SHALL INCLUDE IN BID AND OMIT IF NOT ALLOWED BY LANDLORD.
3. PROVIDE REMOTE SENSORS FOR EACH ROOF TOP UNIT. REFER TO SHEET A1.0 FOR LIGHTSTAT CONTACT INFORMATION.
4. SPACE ABOVE CEILING IS TO BE A RETURN AIR PLENUM. CONSTRUCTION MATERIALS ABOVE CEILING SHALL BE NONCOMBUSTIBLE, OR HAVE A MAXIMUM 25 FLAME SPREAD AND 50 SMOKE DEVELOPMENT FINISH RATING. WIRING SHALL BE LABELED PLENUM RATED TYPE PER NFPA 70. ALL EXISTING LANDLORD EQUIPMENT/DUCT IN SPACE IS EXISTING TO REMAIN.
5. CONTRACTOR SHALL VERIFY EXACT LOCATIONS IN FIELD, PRIOR TO BID. TENANT SHALL EMPLOY A TAB, NEBB, OR AABC CERTIFIED AIR BALANCE CONTRACTOR TO PERFORM FINAL AIR TESTING AND BALANCING. CONTRACTOR TO MAINTAIN MAKE UP AIR METHOD/OPENING FOR SMOKE EVACUATION OF SPACE.
6. CONTRACTOR SHALL CONFIRM WITH LANDLORD'S VAV TEMPERATURE CONTROL REQUIREMENTS AFTER COORDINATING WITH LANDLORD AND TENANT. LANDLORD CRITERIA SHALL SUPERCEDE OTHER CONTROL INFORMATION AND NOTES ON THESE SHEETS. TIE ALL CONTROLS INTO LANDLORD'S EMS SYSTEM AS REQUIRED AND PROVIDE AND INSTALL ALL EQUIPMENT AS INDICATED IN CRITERIA. EMPLOY LANDLORD'S APPROVED CONTRACTOR TO PROGRAM VAV CONTROLS ON THE MALL EMS.
7. CONTRACTOR SHALL PROVIDE DUCT SMOKE DETECTOR IF REQUIRED BY CODE AND LANDLORD. TIE INTO VAV AND MAIN AHU OPERATION AS REQUIRED. CONNECT TO TEST STATION AND LOCATE PER TENANT.
8. TENANT'S EQUIPMENT SHALL NOT TRANSMIT VIBRATION TO THE BUILDING. PROVIDE VIBRATION ISOLATORS FOR ALL VAV TERMINALS.
9. ALL SUPPLY AIR DUCTWORK SHALL BE EXTERNALLY INSULATED WITH 1–1/2" THICK FOIL FACE INSULATION.
10. CONTRACTOR SHALL CONNECT HVAC SYSTEM TO LANDLORD'S BMS AS REQUIRED. COORDINATE EXACT REQUIREMENTS WITH LANDLORD, PRIOR TO BID.
11. CONTRACTOR SHALL CONFORM WITH ALL LANDLORD REQUIREMENTS AND ANY CONTRADICTING INFORMATION ON THESE SHEETS WITH THE TENANT DESIGN CRITERIA, THE TENANT DESIGN CRITERIA SUPERCEDES.

KEYED NOTES

1. NEW VAV WITH ELECTRIC HEAT. CONFIRM EXACT LOCATION AT SITE. CONNECT TO EXISTING 16" INLET FROM LANDLORD HVAC MAIN DUCT AND COORDINATE WITH LANDLORD, PRIOR TO BID. CONTRACTOR SHALL COORDINATE INSTALLATION AND CONNECTION TO MALL'S BMS WITH LANDLORD'S CONTRACTOR AT TENANT'S EXPENSE. CONTACT MATT BENNETT AT WAYPOINT SYSTEMS 770.649.6100. COORDINATE PURCHASING AND ORDERING OF VAV BOXES WITH MALL OPERATING MANAGER. REFER TO LANDLORD'S PRICING SCHEDULE WITHIN THE TENANT CRITERIA.
2. CONTRACTOR SHALL MAINTAIN EXISTING OPENING IN DEMISING WALL FOR RETURN/SMOKE EVACUATION AND PROVIDE NEW ONLY AS REQUIRED. MAINTAIN OR PROVIDE NEW FIRE DAMPERS AT ANY PENETRATION THROUGH FIRE–RATED ASSEMBLIES AS REQUIRED. COORDINATE EXACT WALL OPENING SIZE/LOCATION REQUIREMENTS WITH LANDLORD PRIOR TO BID.
3. PROVIDE FLEX–DUCT TO DIFFUSER NECKS. TYPICAL AT ALL DIFFUSER CONNECTIONS. SEE DETAIL ON SHEET M2.0 FLEX–DUCT SHALL BE 5'–0" MAX LENGTH.
4. REMOTE TEMPERATURE SENSOR PROVIDED BY WAYPOINT SYSTEMS, AT TENANT EXPENSE, AT 80" A.F.F. TO THE CENTER OF THE SENSOR. E.C. IS TO PROVIDE POWER WIRING AND EQUIPMENT AS REQUIRED. COORDINATE PROVISION, INSTALLATION, AND TIE–IN TO LANDLORD BMS WITH LANDLORD PRIOR TO BID. CONTACT MATT BENNETT 770.649.6100
5. PROVIDE NEW TOILET ROOM EXHAUST FAN.
6. NEW 8"ø EXHAUST DUCT TO CONNECT TO EXISTING LANDLORD EXHAUST DUCT FOR SPACE. CONTRACTOR TO VERIFY EXACT SIZE, LOCATION, AND CONNECTION POINT IN FIELD, PRIOR TO BID.
7. BALANCE ALL UNITS AND PROVIDE BALANCE REPORT WITHIN 5% OF SPECIFICATION. CERTIFIED TEST AND AIR BALANCE REPORT TO BE SUBMITTED TO LANDLORD FOR APPROVAL.
8. EXISTING LANDLORD DUCT/PIPE TO REMAIN. CONTRACTOR TO VERIFY LOCATION IN FIELD, PRIOR TO BID.
9. CONTRACTOR TO INSTALL 20" ROUND PRIMARY SUPPLY AIR DUCT FROM MALL MAIN TRUNK DUCT TO EACH VAV BOX.
10. CONTRACTOR SHALL VERIFY EXISTING 12"ø SUPPLY DUCTWORK IN SPACE. IF REQUIRED, COORDINATE REMOVAL AND CAP/SEAL ALL UNUSED SUPPLY AIR TAPS AIR TIGHT BACK TO LANDLORD MAIN. VERIFY IN FIELD, PRIOR TO BID.
11. CONTRACTOR SHALL PROVIDE NEW SMOKE DAMPERS AT ANY PENETRATION THROUGH SMOKE–RATED ASSEMBLIES AS REQUIRED.

Air System Sizing Summary for NEW VAV SYSTEM

Project Name: FAMOUS FOOTWEAR_140341_ALPHARETTA, GA — 08/20/2014
Prepared by: Tricarico — 03:53PM

Air System Information
- Air System Name: **NEW VAV SYSTEM**
- Equipment Class: **PKG ROOF**
- Air System Type: **SZCAV**
- Number of zones: **1**
- Floor Area: **5705.0** ft²
- Location: **Atlanta, Georgia**

Sizing Calculation Information
- Calculation Months: **Jan to Dec**
- Sizing Data: **Calculated**
- Zone CFM Sizing: **Sum of space airflow rates**
- Space CFM Sizing: **Individual peak space loads**

Central Cooling Coil Sizing Data
- Total coil load: **15.4** Tons
- Total coil load: **184.2** MBH
- Sensible coil load: **126.1** MBH
- Coil CFM at Jul 1400: **4450** CFM
- Max block CFM: **4450** CFM
- Sum of peak zone CFM: **4450** CFM
- Sensible heat ratio: **0.684**
- ft²/Ton: **371.6**
- BTU/(hr-ft²): **32.3**
- Water flow @ 10.0 °F rise: **N/A**
- Load occurs at: **Jul 1400**
- OA DB / WB: **93.5 / 73.9** °F
- Entering DB / WB: **83.2 / 68.4** °F
- Leaving DB / WB: **55.9 / 54.7** °F
- Coil ADP: **52.9** °F
- Bypass Factor: **0.100**
- Resulting RH: **51** %
- Design supply temp.: **55.0** °F
- Zone T-stat Check: **1 of 1** OK
- Max zone temperature deviation: **0.0** °F

Central Heating Coil Sizing Data
- Max coil load: **109.4** MBH
- Coil CFM at Des Htg: **4450** CFM
- Max coil CFM: **4450** CFM
- Water flow @ 20.0 °F drop: **N/A**
- Load occurs at: **Des Htg**
- BTU/(hr-ft²): **19.2**
- Ent. DB / Lvg DB: **55.1 / 78.7** °F

Supply Fan Sizing Data
- Actual max CFM: **4450** CFM
- Standard CFM: **4286** CFM
- Actual max CFM/ft²: **0.78** CFM/ft²
- Fan motor BHP: **1.22** BHP
- Fan motor kW: **0.97** kW
- Fan static: **1.00** in wg

Outdoor Ventilation Air Data
- Design airflow CFM: **1232** CFM
- CFM/ft²: **0.22** CFM/ft²
- CFM/person: **16.22** CFM/person

Zone Sizing Summary for NEW VAV SYSTEM

Project Name: FAMOUS FOOTWEAR_140341_ALPHARETTA, GA — 08/20/2014
Prepared by: Tricarico — 03:53PM

Air System Information
- Air System Name: **NEW VAV SYSTEM**
- Equipment Class: **PKG ROOF**
- Air System Type: **SZCAV**
- Number of zones: **1**
- Floor Area: **5705.0** ft²
- Location: **Atlanta, Georgia**

Sizing Calculation Information
- Calculation Months: **Jan to Dec**
- Sizing Data: **Calculated**
- Zone CFM Sizing: **Sum of space airflow rates**
- Space CFM Sizing: **Individual peak space loads**

Zone Sizing Data

Zone Name	Maximum Cooling Sensible (MBH)	Design Airflow (CFM)	Minimum Airflow (CFM)	Time of Peak Load	Maximum Heating Load (MBH)	Zone Floor Area (ft²)	Zone CFM/ft²
Zone 1	106.5	4450	4450	Jul 1400	48.9	5705.0	0.78

Zone Terminal Sizing Data
No Zone Terminal Sizing Data required for this system.

Space Loads and Airflows

Zone Name / Space Name	Mult.	Cooling Sensible (MBH)	Time of Load	Air Flow (CFM)	Heating Load (MBH)	Floor Area (ft²)	Space CFM/ft²
Zone 1							
RESTROOM	1	1.4	Jul 1400	58	0.9	123.0	0.47
SALES	1	98.5	Jul 1400	4115	43.4	5042.0	0.82
STOCK	1	6.6	Jul 1400	277	4.6	540.0	0.51

Ventilation Sizing Summary for NEW VAV SYSTEM

Project Name: FAMOUS FOOTWEAR_140341_ALPHARETTA, GA — 08/20/2014
Prepared by: Tricarico — 03:53PM

1. Summary
- Ventilation Sizing Method: **Sum of Space OA Airflows**
- Design Ventilation Airflow Rate: **1232** CFM

2. Space Ventilation Analysis Table

Zone Name / Space Name	Mult.	Floor Area (ft²)	Maximum Occupants	Maximum Supply Air (CFM)	Required Outdoor Air (CFM/person)	Required Outdoor Air (CFM/ft²)	Required Outdoor Air (CFM)	Required Outdoor Air (% of supply)	Uncorrected Outdoor Air (CFM)
Zone 1									
RESTROOM	1	123.0	0.0	57.9	0.00	0.00	0.0	0.0	0.0
SALES	1	5042.0	75.0	4115.2	7.50	0.12	0.0	0.0	1167.5
STOCK	1	540.0	1.0	277.0	0.00	0.12	0.0	0.0	64.8
Totals (incl. Space Multipliers)				**4450.1**					**1232.3**

2 / M1.0 — HVAC LOAD CALCULATION
SCALE: NOT TO SCALE

COPYRIGHT ©2014 BY BROWN SHOE, INC. PROTOTYPE VERSION: 010413 ELEC/ LIGHTSTAT

BROWN SHOE COMPANY, INC.
8300 Maryland Ave.
Clayton, MO 63105
314/854-4000
BROWN SHOE COMPANY

09/15/2014	BID & PERMIT
09/27/2014	2 LANDLORD COMMENTS

d p c e — don penn ■ consulting engineer
635 Westport Parkway
Suite 300
Grapevine, Texas 76051
Phone: 817-410-2858
Fax: 817-251-8411

PROHIBITION ON REUSE: INFORMATION CONTAINED IN THESE DRAWINGS AND SPECIFICATIONS WAS PREPARED FOR USE ON THE SPECIFIC SITE INDICATED. USE OF THIS INFORMATION ON ANOTHER PROJECT IS PROHIBITED AND CONTRARY TO LAW UNLESS EXPRESSLY AUTHORIZED IN WRITING BY THE AUTHOR.
THESE DRAWINGS AND SPECIFICATIONS ARE AND SHALL REMAIN THE PROPERTY OF THE BROWN SHOE, INC. DISPLAY, REPRODUCTION, OR USE FOR ANY BUT THE SPECIFICALLY AGREED UPON PURPOSES, WITHOUT THE WRITTEN AUTHORIZATION OF BROWN SHOE, INC. IS STRICTLY PROHIBITED.
COPYRIGHT NOTICE: THESE DRAWINGS AND SPECIFICATIONS ARE SUBJECT TO COPYRIGHT PROTECTION AS AN "ARCHITECTURAL WORK" UNDER SEC. 102 OF THE COPYRIGHT ACT, 17 U.S.C. AS AMENDED DECEMBER 1990; KNOWN AS THE ARCHITECTURAL WORKS COPYRIGHT PROTECTION ACT OF 1990. THE PROTECTION INCLUDES, WITHOUT LIMITATION, THE OVERALL FORM, ARRANGEMENT, AND COMPOSITION OF SPACES AND ELEMENTS OF THE DESIGN.

FAMOUS footwear
STORE #3406
NORTH POINT MALL
1000 NORTH POINT CIR SUITE 2208
ALPHARETTA, GA 30022

DESIGNED BY:	DP
DRAWN BY:	MJ
CHECKED BY:	DP
DATE:	09/27/14
PROTO. VER.:	010413
PROJECT NO:	140341

MECHANICAL PLAN

M1.0

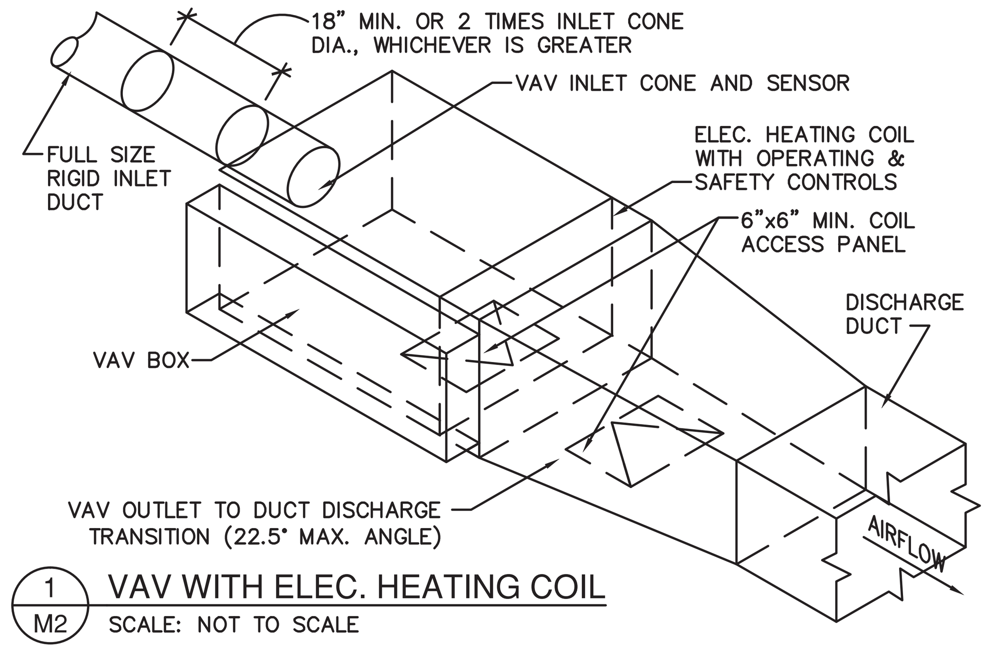

1 / M2 VAV WITH ELEC. HEATING COIL
SCALE: NOT TO SCALE

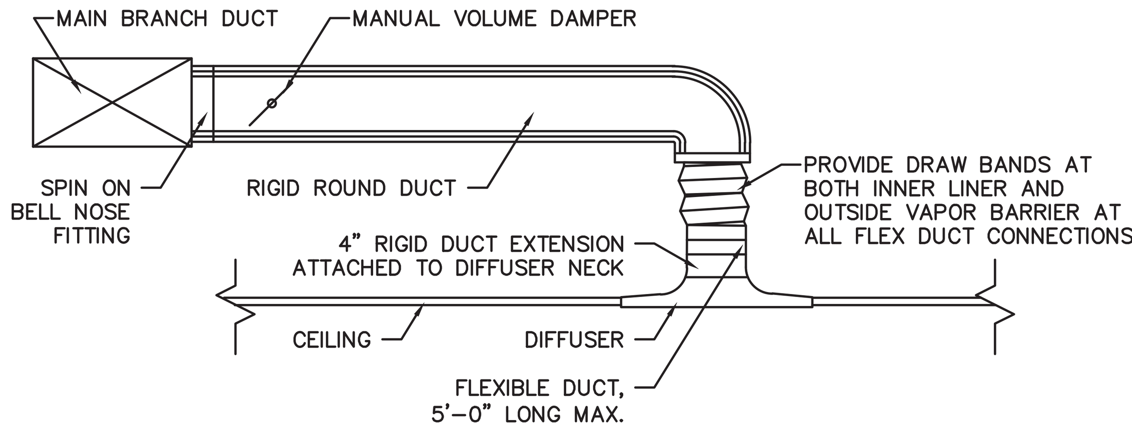

2 / M2.0 TYPICAL DIFFUSER CONNECTION TO ROUND DUCT
SCALE: NOT TO SCALE

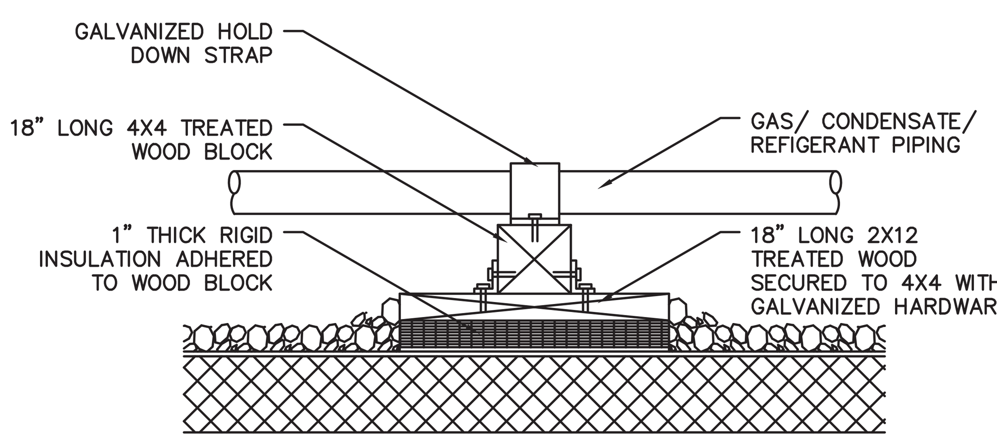

3 / M2.0 PIPING SUPPORT DETAIL ON ROOF
SCALE: NOT TO SCALE

NOTE:
VAV BOXES SHALL BE FAN POWERED PARALLEL FLOW-FOR HEATING MODE OF OPERATION. (2)

VARIABLE AIR VOLUME BOX SCHEDULE		
UNIT TAG	VAV-1	VAV-2
AREA SERVED	Sales Area	Sales Area
MANUFACTURER	TRANE	TRANE
MODEL NUMBER	VSEE-42	VSEE-42
CFM	3400	3400
MINIMUM CFM	0	0
INLET DUCT SIZE	16"ø	16"ø
NC @ 0.9" S.P.	–	–
APD	–	–
ELEC. HEATING COIL		
CFM	3400	3400
EAT/ LAT	56/68	56/68
KW	12	12
CONTROL STEPS	–	–
ELECTRICAL		
V/ PH/ HZ	460/ 3/ 60	460/ 3/ 60
DISCONNECT	Div. 26	Div. 26
MCA/MOCP	25/30	25/30

REMARKS
1. PROVIDE WITH NON-FUSED DISCONNECT, VIBRATION ISOLATORS, 1/2" THICK INSULATION, PRIMARY AIR VALVE WITH ELECTRIC ACTUATOR, UL LISTED ELECTRIC HEATING COIL, 24V CONTROL TRANSFORMER, WALL MOUNTED SPACE TEMPERATURE SENSOR AND DDC CONTROL INTERFACE COMPATIBLE WITH MALL BMS.
2. CONTRACTOR TO HIRE STRUCTURAL ENGINEER TO VERIFY STRUCTURAL INTEGRITY OF FLOOR DECK. ADDITIONAL STRUCTURAL REQUIREMENTS ARE THE RESPONSIBILITY OF THIS CONTRACTOR.
3. CONTRACTOR SHALL COORDINATE INSTALLATION AND CONNECTION TO MALL'S BMS WITH LANDLORD'S CONTRACTOR AT TENANT'S EXPENSE. CONTACT PHIL HEXTON FROM SHEARER CONTROL SYSTEMS.
4. COORDINATE PURCHASING AND ORDERING OF VAV BOXES WITH MALL OPERATING MANAGER. REFER TO LANDLORD'S PRICING SCHEDULE WITHIN THE TENANT CRITERIA. TENANT VAV BOXES, SHALL BE DELIVERED TO THE TENANT CONTRACTOR AT THE JOBSITE PRE-PROGRAMMED, COMPLETELY CALIBRATED FOR PROPER AIR QUANTITY AND WITH CONTROLS MOUNTED.

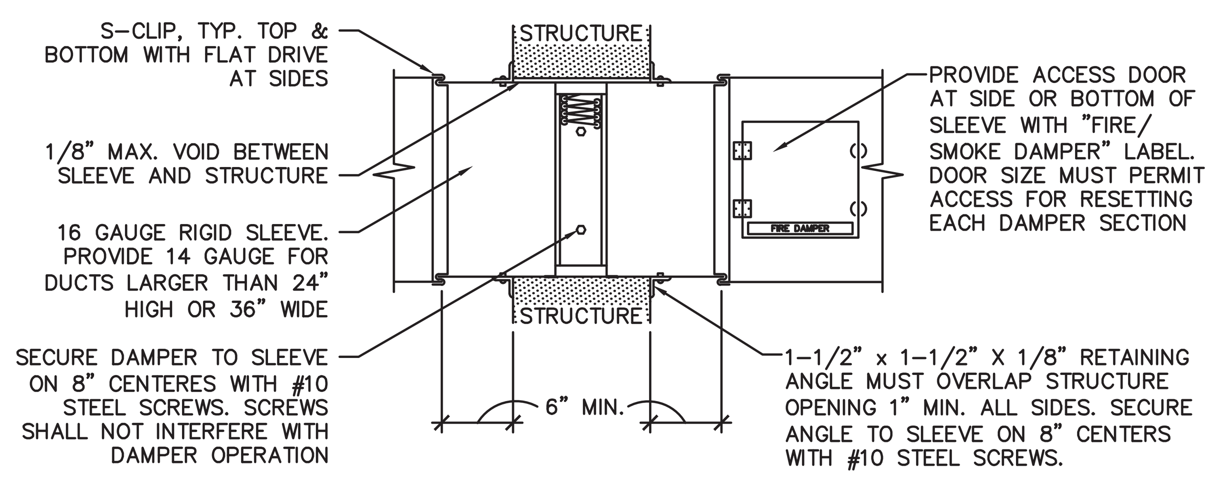

4 / M2.0 FIRE DAMPER DETAIL
SCALE: NOT TO SCALE

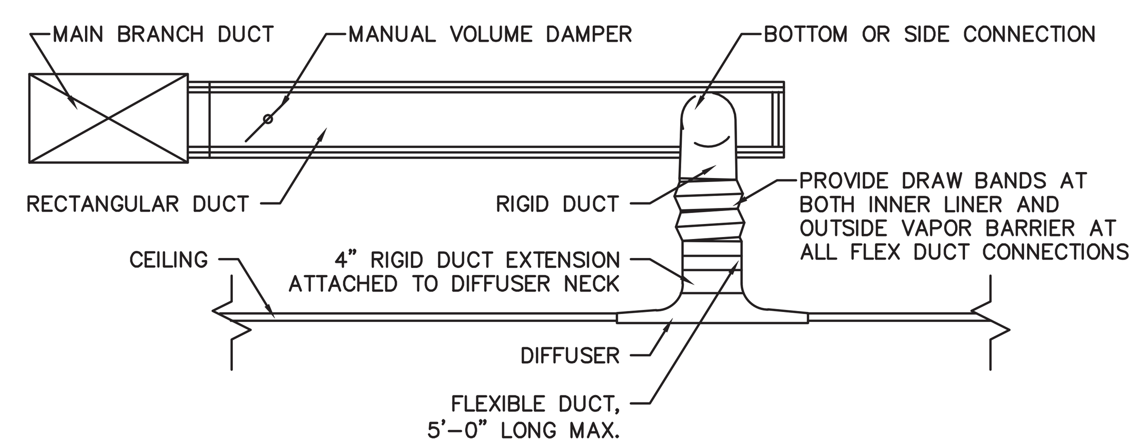

5 / M2.0 TYPICAL DIFFUSER CONNECTION TO RECT. DUCT
SCALE: NOT TO SCALE

EXHAUST FAN SCHEDULE		
DESIGNATION	"EF-1"	"EF-2"
AREA SERVED	Toilet Room	Toilet Room
MANUFACTURER	Cook	Cook
MODEL NUMBER	GC-220	GC-220
DRIVE (BELT, DIRECT)	Direct	Direct
MOTOR RPM	1050	1050
TYPE (BI, AF, FC, PROP)	FC	FC
FAN DATA		
CFM	75	75
ESP	0.25	0.25
RPM	–	–
ELECTRICAL		
W	39	39
V/ PH/ HZ	115/ 1/ 60	115/ 1/ 60
FAN UNIT	Div. 23	Div. 23
SWITCHING / POWER	Div. 26	Div. 26

REMARKS:
1. PROVIDE WITH VIBRATION ISOLATORS, BACKDRAFT DAMPER, AND INTERLOCK WITH TOILET ROOM LIGHT SWITCH.

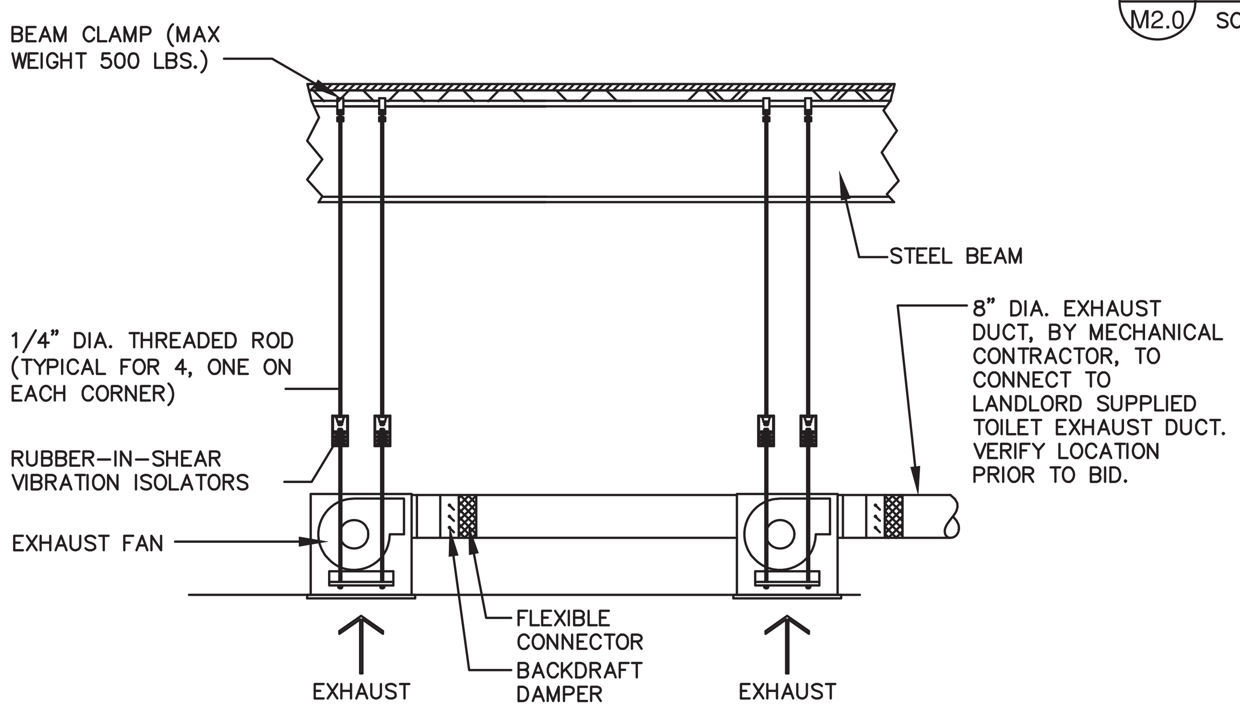

6 / M2.0 EXHAUST FAN DETAIL
SCALE: NOT TO SCALE

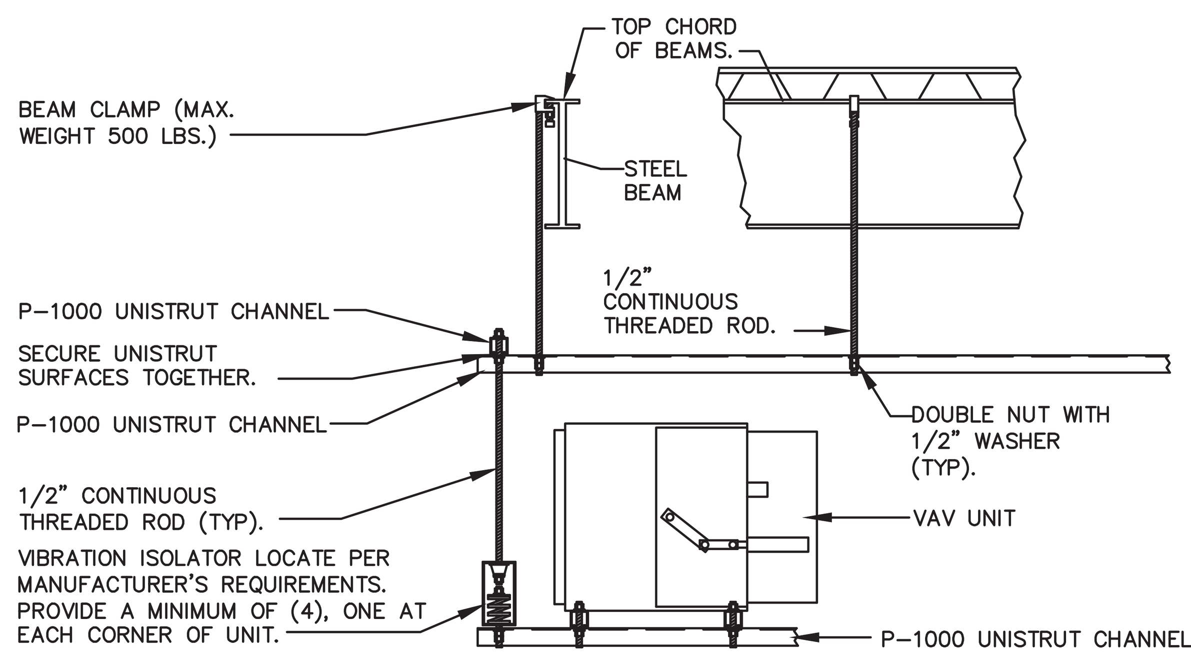

7 / M2.0 VAV SUPPORT DETAIL
SCALE: NOT TO SCALE

SMOKE DAMPER SCHEDULE	
SD	UL555S LEAKAGE CLASS 3 SMOKE DAMPER WITH TRIPLE V-GROOVE BLADES, 16 GAGE GALVANIZED STEEL BLADES. RUSKIN MODEL SD35. PROVIDE ACCESS DOOR FOR SERVICING OF SMOKE DAMPER.

GRILLE, REGISTER, & DIFFUSER SCHEDULE				
DESIGNATION	"A"	"B"	"C"	"D"
FLOW TYPE	Supply	Supply	Return	Transfer
INSTALLATION TYPE	Lay-in	Surface Mount	Lay-in	Surface Mount
MANUFACTURER	Titus	Titus	Titus	Titus
MODEL NUMBER	TMS	300R	50F	50F
REMARKS	24X24 SUPPLY DIFFUSER. PROVIDE WHITE FINISH.	12X12 SUPPLY DIFFUSER. PROVIDE WHITE FINISH.	24X24 RETURN GRILLE. PROVIDE WHITE FINISH.	12X12 TRANSFER GRILLE. MOUNT TIGHT TO STRUCTURE.

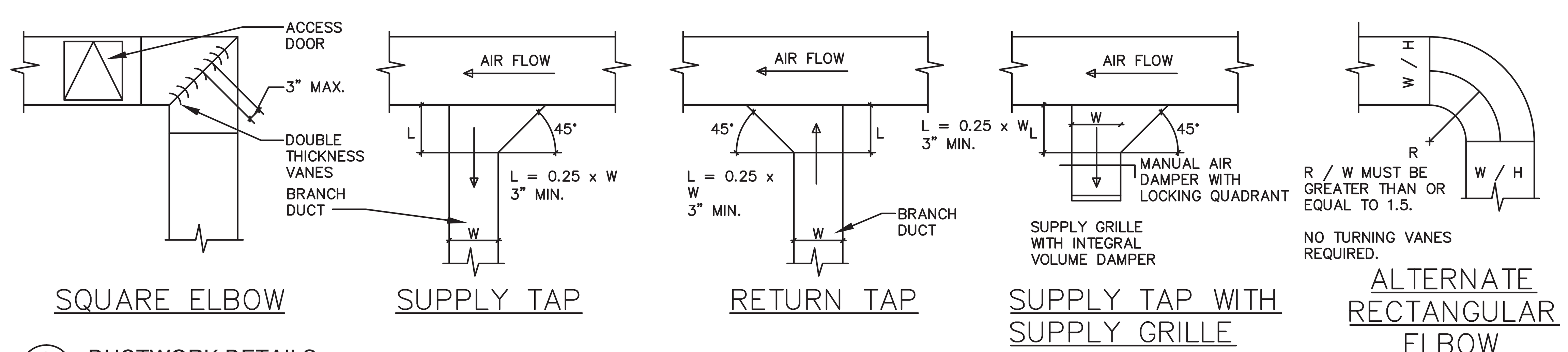

8 / M2.0 DUCTWORK DETAILS
SCALE: NOT TO SCALE

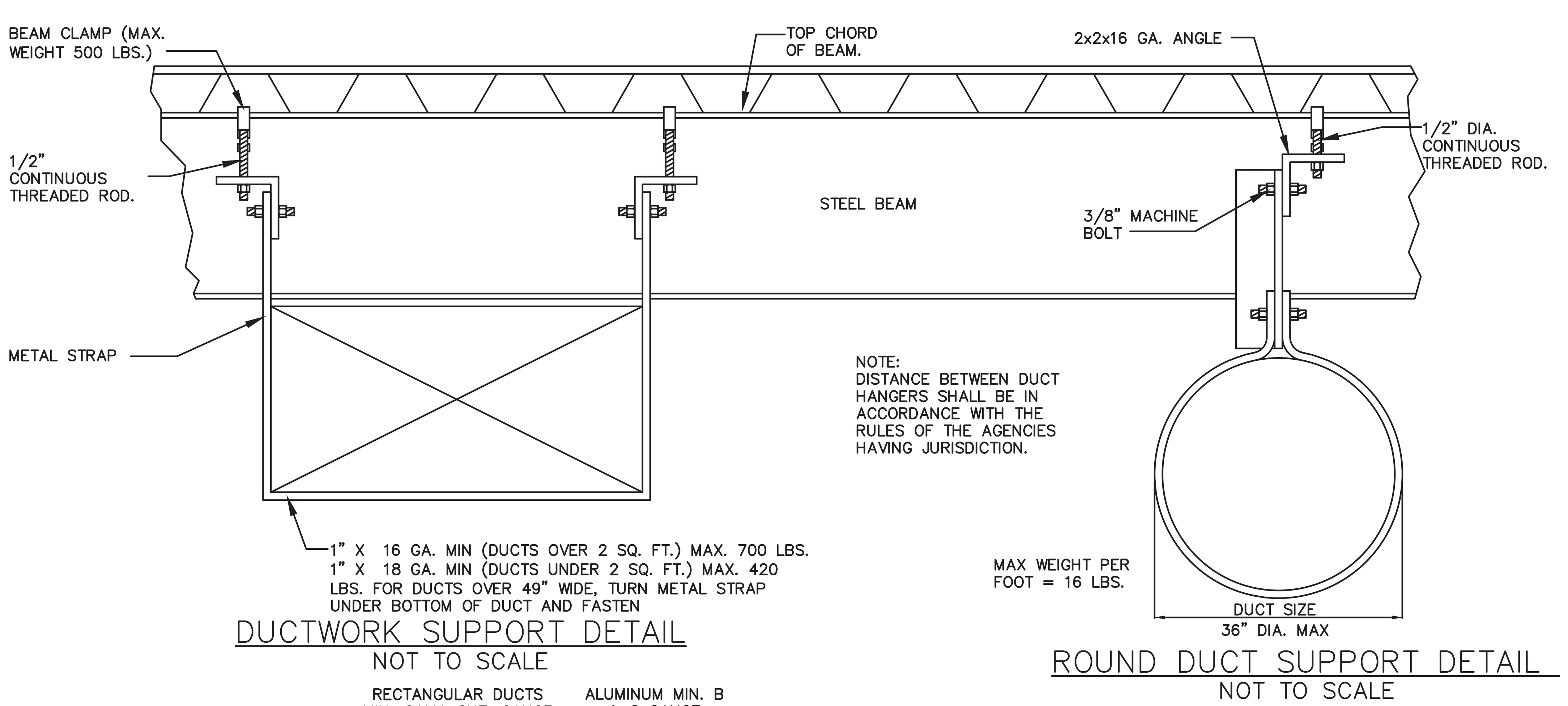

DUCTWORK SUPPORT DETAIL
NOT TO SCALE

MAX. SIDE INCHES	RECTANGULAR DUCTS MIN. GALV. SHT. GAUGE	ALUMINUM MIN. B & S GAUGE
THROUGH 12	26 (0.022 IN.)	24 (0.020 IN.)
13 THROUGH 30	24 (0.028 IN.)	22 (0.025 IN.)
31 THROUGH 54	22 (0.034 IN.)	20 (0.032 IN.)
55 THROUGH 84	20 (0.040 IN.)	18 (0.040 IN.)
OVER 84	18 (0.052 IN.)	16 (0.051 IN.)

ROUND DUCT SUPPORT DETAIL
NOT TO SCALE

DIAMETER INCHES	SPIRAL SEAM DUCT STEEL MIN. GALV. SHT. GAUGE	ROUND DUCTS LONGITUDINAL SEAM DUCT STEEL MIN. GALV. SHT. GAUGE	FITTINGS STEEL MIN. GALV. SHT. GAUGE
THROUGH 12	28 (0.019 IN.)	26 (0.022 IN.)	26 (0.022 IN.)
13 THROUGH 18	26 (0.022 IN.)	24 (0.028 IN.)	24 (0.028 IN.)
19 THROUGH 28	24 (0.028 IN.)	22 (0.034 IN.)	22 (0.034 IN.)
29 THROUGH 36	22 (0.034 IN.)	20 (0.040 IN.)	20 (0.040 IN.)
37 THROUGH 52	20 (0.040 IN.)	18 (0.052 IN.)	18 (0.052 IN.)

9 / M2.0 DUCTWORK SUPPORT DETAILS
SCALE: NOT TO SCALE

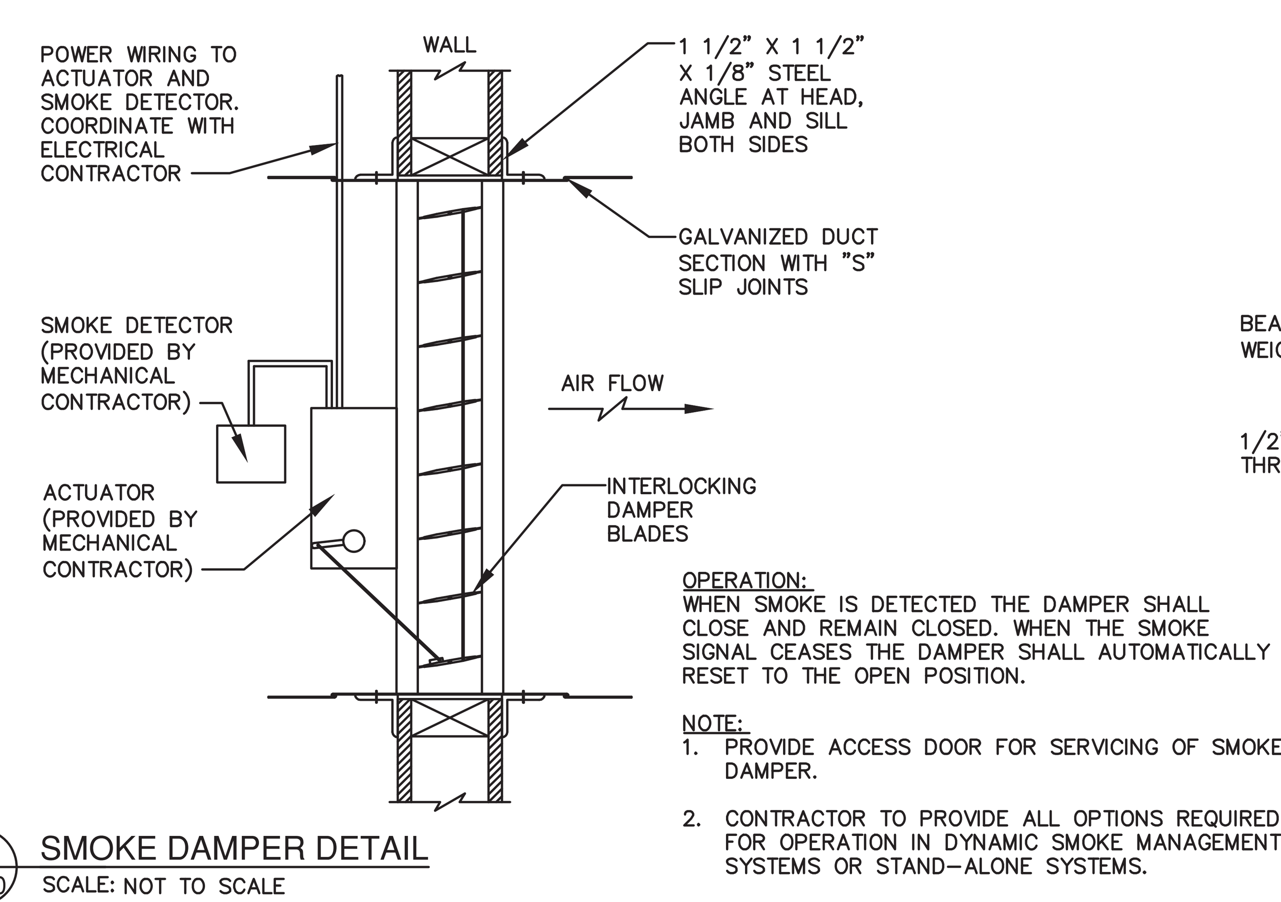

OPERATION:
WHEN SMOKE IS DETECTED THE DAMPER SHALL CLOSE AND REMAIN CLOSED. WHEN THE SMOKE SIGNAL CEASES THE DAMPER SHALL AUTOMATICALLY RESET TO THE OPEN POSITION.

NOTE:
1. PROVIDE ACCESS DOOR FOR SERVICING OF SMOKE DAMPER.
2. CONTRACTOR TO PROVIDE ALL OPTIONS REQUIRED FOR OPERATION IN DYNAMIC SMOKE MANAGEMENT SYSTEMS OR STAND-ALONE SYSTEMS.

10 / M2.0 SMOKE DAMPER DETAIL
SCALE: NOT TO SCALE

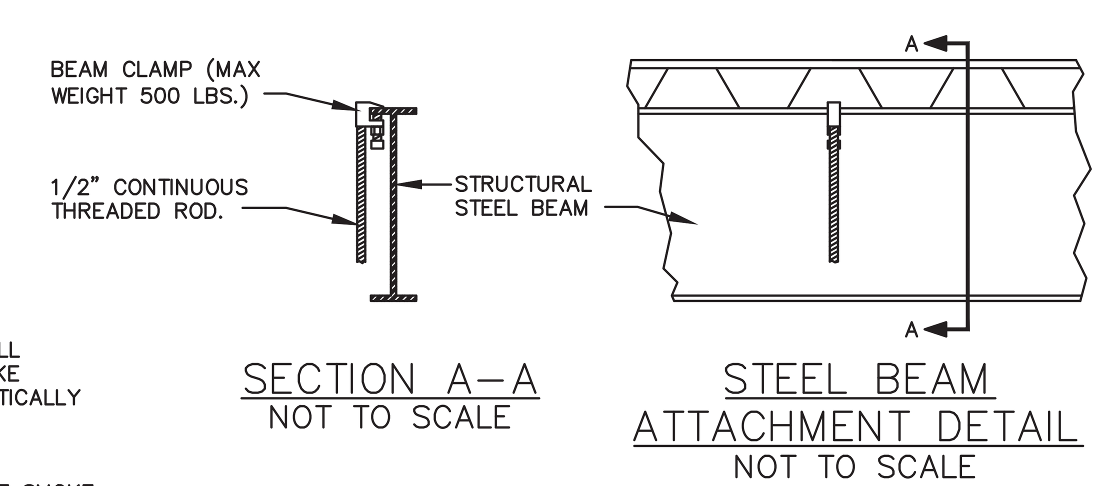

11 / M2.0 ATTACHMENT TO STRUCTURE DETAIL
SCALE: NOT TO SCALE

BROWN SHOE COMPANY, INC.
8300 Maryland Ave.
Clayton, MO 63105
314/854-4000
BROWN SHOE COMPANY

09/15/2014	BID & PERMIT	
09/27/2014	(2)	LANDLORD COMMENTS

d p c e
don penn ▪ consulting engineer
635 Westport Parkway
Suite 300
Grapevine, Texas 76051
Phone: 817-410-2858
Fax: 817-251-8411

PROHIBITION ON REUSE:
INFORMATION CONTAINED IN THESE DRAWINGS AND SPECIFICATIONS WAS PREPARED FOR USE ON THE SPECIFIC SITE INDICATED. USE OF THIS INFORMATION ON ANOTHER PROJECT IS PROHIBITED AND CONTRARY TO LAW UNLESS EXPRESSLY AUTHORIZED IN WRITING BY THE AUTHOR.
THESE DRAWINGS AND SPECIFICATIONS ARE AND SHALL REMAIN THE PROPERTY OF THE BROWN SHOE, INC. DISPLAY, REPRODUCTION, OR USE FOR ANY BUT THE SPECIFICALLY AGREED UPON PURPOSES, WITHOUT THE WRITTEN AUTHORIZATION OF BROWN SHOE, INC. IS STRICTLY PROHIBITED.
COPYRIGHT NOTICE:
THESE DRAWINGS AND SPECIFICATIONS ARE SUBJECT TO COPYRIGHT PROTECTION AS AN "ARCHITECTURAL WORK" UNDER SEC. 102 OF THE COPYRIGHT ACT, 17 U.S.C. AS AMENDED DECEMBER 1990; KNOWN AS THE ARCHITECTURAL WORKS COPYRIGHT PROTECTION ACT OF 1990. THE PROTECTION INCLUDES, WITHOUT LIMITATION, THE OVERALL FORM, ARRANGEMENT, AND COMPOSITION OF SPACES AND ELEMENTS OF THE DESIGN.

FAMOUS footwear
STORE #3406
NORTH POINT MALL
1000 NORTH POINT CIR SUITE 2208
ALPHARETTA, GA 30022

DESIGNED BY: DP
DRAWN BY: MJ
CHECKED BY: DP
DATE: 09/27/14
PROTO. VER.: 010413
PROJECT NO: 140341

DETAILS & SCHEDULES

M2.0

COPYRIGHT ©2014 BY BROWN SHOE, INC. PROTOTYPE VERSION: 010413

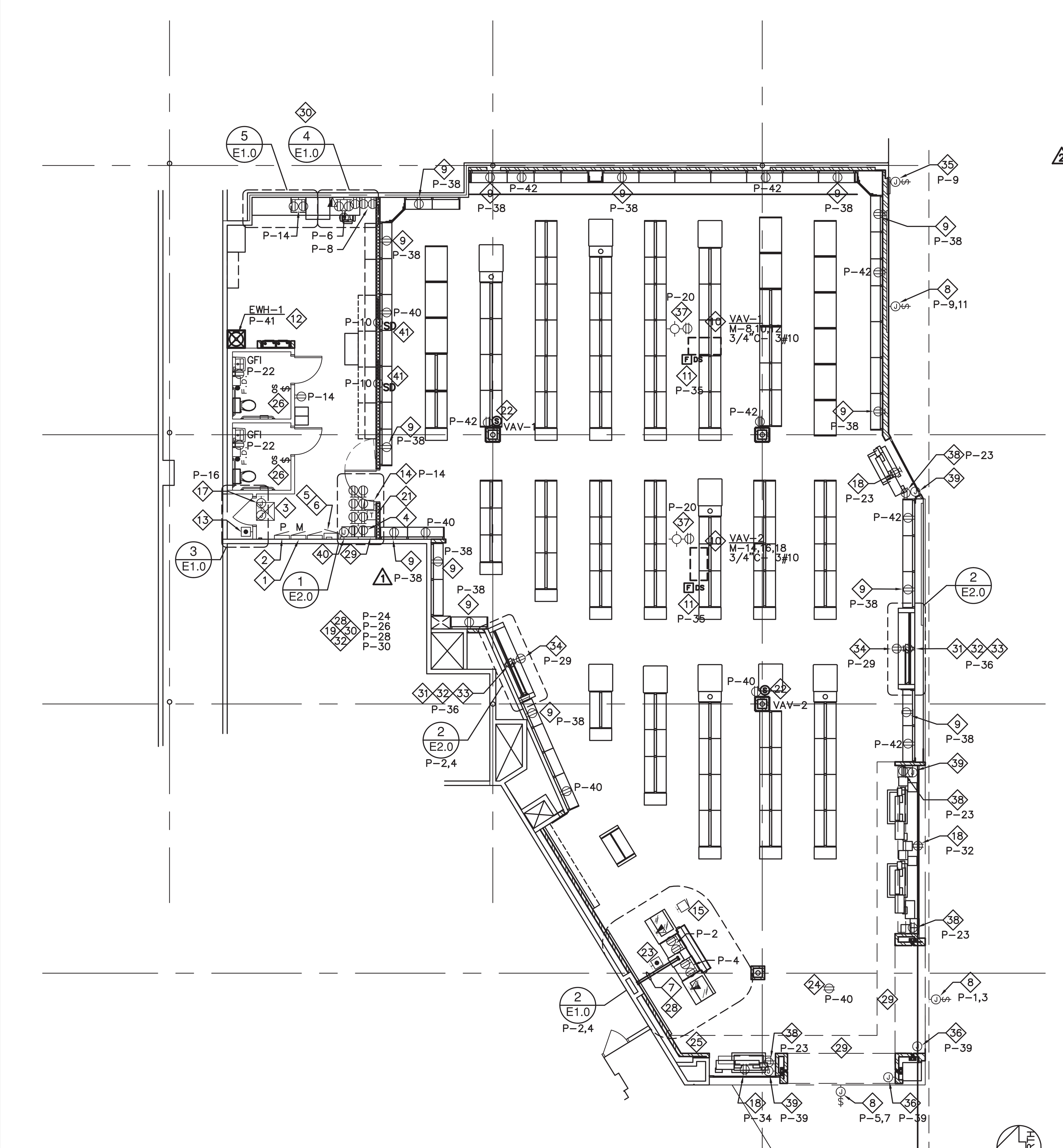

1 E1.0 POWER PLAN
SCALE: 1/8" = 1'-0"

GENERAL NOTES

1. ALL WALL MOUNTED RECEPTACLES AND COVER PLATES IN SALES AREA TO MATCH WALL COLOR EXCEPT FOR THE COLUMN RECEPTACLES WHICH SHALL BE GLASS MIRROR COVER PLATE AND WHITE RECEPTACLE. THE WORKROOM AND TOILET ROOM SHALL HAVE WHITE RECEPTACLES AND COVER PLATES.
2. ALL CEILING MOUNTED RECEPTACLES AND COVER PLATES IN SALES AREA TO BE WHITE EXCEPT FOR RECEPTACLES AND COVER PLATES MOUNTED IN DRYWALL CEILINGS, WHICH SHALL BE COLORED TO MATCH WALL.
3. RECEPTACLES AND DATA/PHONE BOXES SHALL BE MOUNTED AT 24" A.F.F. TO CENTER OF OUTLET UNLESS OTHERWISE NOTED. (CALIFORNIA 18")
4. ALL DATA AND TELEPHONE FINAL CONNECTIONS BY BROWN SHOE.
5. COORDINATE FIRE ALARM REQUIREMENTS WITH LOCAL AUTHORITIES.
6. ALL WIRING LOCATED IN RETURN AIR PLENUMS SHALL MEET LOCAL CODE.
7. EMPLOY LANDLORD'S APPROVED CONTRACTOR FOR ALL FIRE ALARM WORK. (2)
8. EMPLOY LANDLORD'S APPROVED CONTRACTOR FOR EMERGENCY P.A. SPEAKER INSTALLATION.

(1) EMPTY J-BOX. FOR TRANSFORMER
(2) DOOR VIEWER MOUNTED AT 60" A.F.F
(3) PANIC HARDWARE, REFER TO DOOR SCHEDULE (SHEET A2.0) FOR MANUFACTURER AND SPECIFICATIONS.
(4) FLEX CONDUIT ATTACHED WITH CLIPS EVERY 18"
(5) FULL LENGTH KICK PLATE, REFER TO DOOR SCHEDULE (SHEET A2.0) FOR MANUFACTURER AND SPECIFICATIONS.
(6) PROVIDE 3/4" CONDUIT FROM J-BOX TO ABOVE CEILING TO MEET LOCAL CODE, FLEX CONDUIT NOT ALLOWED.
(7) J-BOX FOR DETEX POWER WIRING

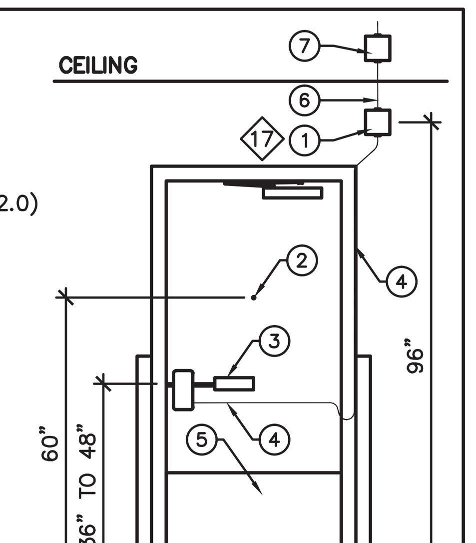

3 E1.0 REAR DOOR PANIC DEVICE DETAIL
SCALE: NONE

NOTE: LOCATION AND CONFIGURATION MAY VARY, REFER TO PLAN.

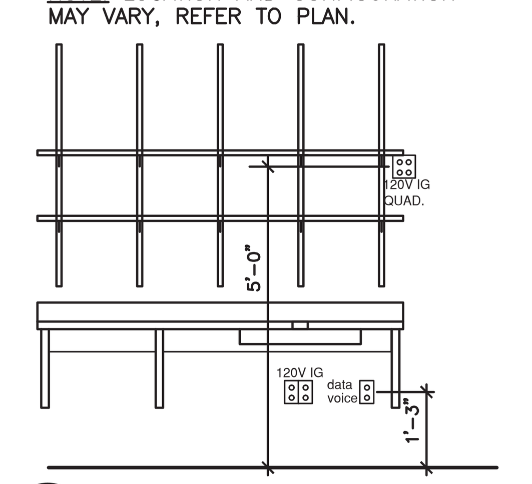

4 E1.0 MANAGER'S AREA DETAIL
SCALE: NONE

NOTE: LOCATION AND CONFIGURATION MAY VARY, REFER TO PLAN.

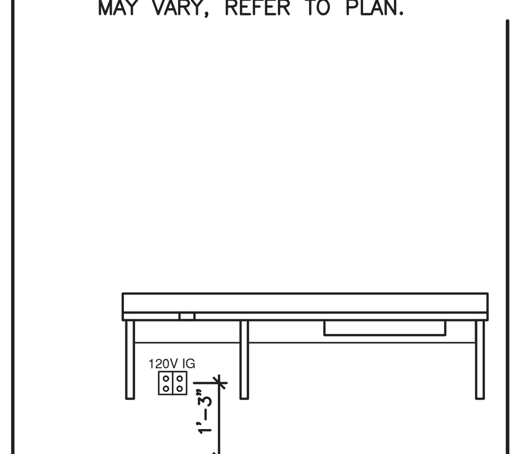

5 E1.0 BREAK AREA DETAIL
SCALE: NONE

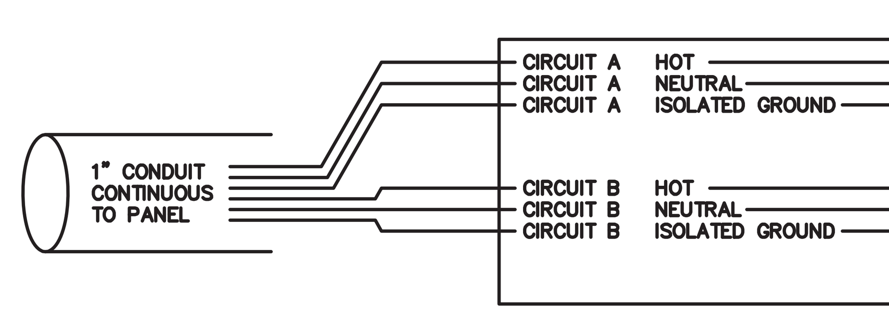

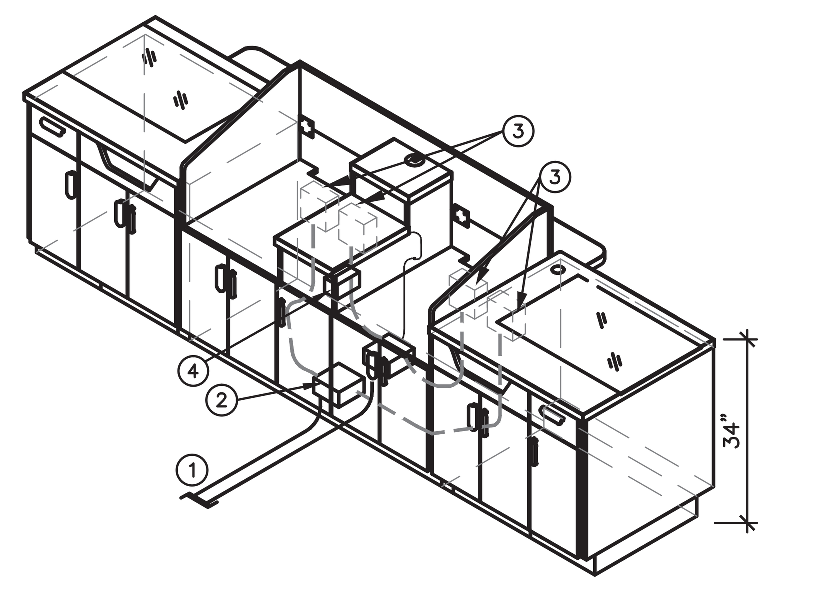

(2)
(1) TWO (2) 1" CONDUITS CORE BORED IN SLAB. CONNECT TO CONDUITS CONCEALED IN NEAREST ADJACENT WALL. REFER TO ELECTRICAL DRAWINGS FOR POWER AND COMMUNICATION REQUIREMENTS.
(2) CONDUIT WITH WHIP FOR LINE VOLTAGE AND LOW VOLTAGE (ONE EACH) TO BE TERMINATED WITH ONE 4"x4"x2.5" DEEP HORIZONTALLY SLAB MOUNTED J-BOX FOR LINE VOLTAGE AND LOW VOLTAGE (ONE EACH).
(3) FIXTURE MANUFACTURER TO PRE-INSTALL J-BOXES AT CASHWRAP AS SHOWN ON DETAIL. ELECTRICIAN TO USE PRE-INSTALLED J-BOXES. SINGLE BOX FOR DATA AND QUAD FOR POWER. J-BOX LOCATION IS NOT TO BE MODIFIED. WIRING FROM SLAB MOUNTED J-BOX TO BE IN CONDUIT AND PER CODE.
(4) E.C. TO INSTALL LIGHTSTAT SYSTEM "OPEN / CLOSE" BUTTON ON SIDE OF COUNTER SURFACE IN CASHWRAP AS INDICATED. REFER TO ELECTRICAL DRAWINGS FOR FURTHER INFORMATION. CONFIRM EXACT LOCATION OF BUTTON WITH THE BROWN SHOE CONSTRUCTION MANAGER PRIOR TO INSTALLATION.

GENERAL NOTES:
1. DATA AND PHONE FINAL CONNECTIONS BY BROWN SHOE GENERAL CONTRACTOR.

2. CASHWRAP FIXTURE HAS LIFT-OUT TOE KICK ACCESS PANELS AT EACH BAY TO FACILITATE WIRING AND SEASONAL REGISTER CONNECTIONS.

2 E1.0 CASHWRAP ELECTRICAL DETAIL
SCALE: NONE

KEYED NOTES

1. (EXISTING/RELOCATED) ELECTRICAL PANEL M. SEE RISER DIAGRAM AND PANEL SCHEDULE ON SHEET E2.0
2. (EXISTING/RELOCATED) ELECTRICAL PANEL P. SEE RISER DIAGRAM AND PANEL SCHEDULE ON SHEET E2.0
3. (EXISTING/RELOCATED) TRANSFORMER, 480 VOLT 3ø PRIMARY, 120/208 VOLT 3ø SECONDARY, SEE RISER DIAGRAM ON SHEET E2.0 FOR SIZE AND LIGHTING HEIGHT.
4. 4'x6' PHONE BOARD SEE DETAIL 1/E2.0
5. LIGHTSTAT SECURITY ALARM INTERFACE PROVIDED BY E.C. ORANGE COLORED LOW VOLTAGE PLENUM RATED CABLE TO BE USED FOR CONNECTION TO A 12VDC OUTPUT FROM SECURITY SYSTEM. CONNECTION TO BE MADE BY E.C. REFER TO LIGHTSTAT SHOP DRAWINGS FOR EXACT REQUIREMENTS.
6. LIGHTSTAT LIGHTING CONTROL PANEL LOCATION. REFER TO SHEET E2.0 AND E3.0 FOR FURTHER INFORMATION.
7. PROVIDE TWO (2) 1" SLAB MOUNTED CONDUIT DROPS WITH PULL STRING FOR POWER AND DATA/PHONE CONCEALED IN WALL. ROUTE UNDER FLOOR SLAB TO 4" SURFACE MOUNTED J-BOX FOR LINE VOLTAGE AND 4" SURFACE MOUNTED J-BOX. PATCH FLOOR. REFER TO DETAIL #2 THIS SHEET FOR FURTHER INFORMATION. VERIFY EXACT LOCATION WITH BROWN SHOE PRIOR TO INSTALLATION.
8. J-BOX FOR EXTERIOR SIGNAGE SHALL CONTAIN TWO (2) 120V 20 AMP CIRCUITS. ALL PRIMARY WIRING BY E.C. TO THE SIGN MUST BE PER UL2161 FOR GFI SIGN TRANSFORMERS. UL2161 REQUIRES THAT ALL CIRCUITS MUST HAVE A DEDICATED HOT, NEUTRAL AND GROUND TERMINATING AT THE ELECTRICAL PANEL. CIRCUIT THRU LIGHTSTAT CONTACTOR. COORDINATE J-BOX LOCATION WITH SIGN CONTRACTOR PRIOR TO ROUGH-IN. SEE ARCHITECTURAL STOREFRONT SECTIONS FOR CLARIFICATION.
9. PROVIDE DUPLEX RECEPTACLE AT 60" A.F.F. FOR CONNECTION TO CABINET/SHELF LIGHTING. RECEPTACLE TO BE CIRCUITED THROUGH ENERGY MANAGEMENT SYSTEM.
10. VAV WITH FUSED DISCONNECT SWITCH, SIZE PER MANUFACTURES RECOMMENDATION. CONNECT TO PANEL M AS INDICATED, SEE PANEL SCHEDULE ON SHEET E2.
11. J-BOX FOR POWER CONNECTION TO DUCT SMOKE DETECTOR. DETECTOR SUPPLIED BY E.C. TO BE 120 VOLT COMPLETE WITH AUXILLARY CONTACTS, BASE SAMPLING TUBES AND REMOTE STATUS INDICATOR/RESET SWITCH. SIMPLEX OR EQUAL. WIRE DETECTOR TO SHUT DOWN UNIT ON ALARM. DETECTOR INSTALLED BY MECHANICAL CONTRACTOR. E.C. SHALL MAKE FINAL POWER AND CONTROL CONNECTIONS.
12. MAKE CONNECTION TO 1.5 KW WATER HEATER. MOUNT DISCONNECTING MEANS ABOVE CEILING ADJACENT TO UNIT.
13. FLUSH MOUNTED PUSH BUTTON AT 36" A.F.F., (EDWARDS 632-L OR EQUAL.)
14. FLUSH MOUNTED DOOR BUZZER AT 8'-6" A.F.F. (EDWARDS 725 OR EQUAL.) BUZZER TO SIGNAL REAR DOOR AND BUZZER TO SIGNAL STORE ENTRANCE DOORS.
15. DOOR BUZZER ABOVE CEILING OVER CASHWRAP (EDWARDS 725 OR EQUAL). CONNECT TO SECONDARY TRANSFORMER IN WORK ROOM. BUZZER TO SIGNAL STORE ENTRANCE DOORS.
16. NOT USED.
17. PROVIDE (1)J-BOX AT 96" A.F.F. ON HINGE SIDE OF DOOR FOR SECURITECH TRIDENT DOOR ALARM SYSTEM TRANSFER BOX AND (1)J-BOX ABOVE CEILING ON HINGE SIDE OF DOOR FOR CONNECTION OF SECURITECH TRIDENT DOOR ALARM SYSTEM POWER WIRING.
18. MOUNT SHOW WINDOW RECEPTACLES IN CEILING. COORDINATE EXACT LOCATION WITH CEILING GRID PRIOR TO ROUGH-IN.
19. AUDIO SYSTEM VOLUME CONTROL TO BE INSTALLED ON PHONE PANEL. SEE DETAIL 1/E2.0
20. NOT USED
21. DOOR BUZZER TRANSFORMER ABOVE CEILING, (EDWARDS 598 OR EQUAL.)
22. E.C. TO PROVIDE LIGHTSTAT TEMPERATURE SENSOR AT 58" A.F.F. TO THE CENTER OF THE SENSOR EXTEND 1/2" CONTROL WIRING CONDUIT INSIDE WALL/COLUMN FURRING AND ABOVE CEILING TO RTU. COORDINATE INSTALLATION WITH HVAC CONTRACTOR. WHEN ADJACENT TO A DOOR, LOCATE SENSOR MIN. 10" FROM DOOR JAMB. REFER TO LIGHTSTAT SHOP DRAWINGS FOR EXACT REQUIREMENTS AND REFER TO FINAL ARCHITECTURAL DRAWINGS FOR LOCATIONS.
23. REMOTE LIGHTSTAT PUSH-BUTTON PROVIDED BY E.C. VIA LIGHTSTAT. REFER TO DETAIL 2 THIS SHEET FOR INSTALLATION LOCATION. PUSH-BUTTON UNIT FOR ACTIVATION OF SALES LIGHTS. YELLOW COLORED LOW VOLTAGE PLENUM RATED CABLE TO BE USED TO CONNECT TO LIGHTING CONTROL PANEL. REFER TO LIGHTSTAT SHOP DRAWINGS FOR EXACT REQUIREMENTS.
24. CEILING MOUNTED DUPLEX RECEPTACLE 10'-0"± FROM CENTERLINE OF ENTRY DOORS.
25. SECURITY KEYPAD TO BE INSTALLED AT 40" A.F.F. TO THE CENTERLINE OF THE PANEL.
26. PROVIDE WALL MOUNTED OCCUPANCY SENSOR/WALL SWITCH, WATTSTOPPER CATALOG #WA-100W IN TOILET ROOM(S). SWITCH SHALL CONTROL FAN AND LIGHT.
27. NOT USED.
28. G.C. TO RUN CONDUIT WITH PULL STRING FROM PHONE BOARD TO CASHWRAP J-BOX (SEE DETAIL 2/E1.0) LEAVING AN 8'-0" WHIP. INSTALLATION TO BE IN COMPLIANCE WITH LOCAL CODES. (1)
29. G.C. TO RUN CONDUIT WITH PULL STRING FROM PHONE BOARD TO CUSTOMER COUNTER LOCATION CENTERED ON FRONT DOORS, 18" TO 36" FROM LEASE LINE LEAVING 6'-0" COIL. SINGLE JUNCTION BOX ATTACHED TO CONDUIT FOR CUSTOMER COUNTER JUNCTION BOX, INSTALLATION TO BE IN COMPLIANCE WITH LOCAL CODES.
30. G.C. TO RUN CONDUIT WITH PULL STRING FROM PHONE BOARD TO MANAGER'S DESK LEAVING 6'-0" WHIP. SINGLE JUNCTION BOX ATTACHED TO CONDUIT FOR MANAGER'S DESK, SET UNDERNEATH DESK AND ADJACENT TO CUSTOMER COUNTER JUNCTION BOX. INSTALLATION TO BE IN COMPLIANCE WITH LOCAL CODES.
31. INSTALL DUPLEX RECEPTACLE AT 24" A.F.F. TO CENTER OF OUTLET. RECEPTACLE IS TO BE CENTERED WITHIN VIDEO FOCAL WALL FIXTURE. CONNECT TO CONSTANT POWER.
32. G.C. TO SUPPLY SINGLE GANG BOX WITH CONDUIT AND PULL STRING AT 24" A.F.F FROM EACH VIDEO FOCAL WALL AREA(S) TO STOCKROOM PHONE BOARD PANEL.
33. PROVIDE NON-SWITCHED CIRCUIT AND RECEPTACLES FOR VIDEO MONITORS AND SUPPORT EQUIPMENT AT FOCAL WALLS AND STOREFRONT DISPLAY WINDOWS. VERIFY LOAD REQUIREMENTS AND ADDITIONAL NON-SWITCHED CIRCUITS AS REQUIRED. VERIFY EXACT LOCATIONS IN FIELD. LIGHTED DISPLAYS ARE TO REMAIN ON CIRCUIT (P-29) WITH SWITCHING TO REMAIN.
34. INSTALL DUPLEX RECEPTACLE AT 96" A.F.F. TO CENTER OF OUTLET. RECEPTACLE IS TO BE CENTERED WITHIN THE VIDEO FOCAL WALL FIXTURE. RECEPTACLE TO BE CIRCUITED THROUGH ENERGY MANAGEMENT SYSTEM. E.C. IS RESPONSIBLE FOR FINAL HOOK UP OF BROWN SHOE SUPPLIED FOCAL WALL FIXTURE INCLUDING INTERCONNECTION OF INTERNAL LIGHT FIXTURES IF REQUIRED. ALL CONDUIT TO BE CONCEALED IN WALL.
35. J-BOX FOR ILLUMINATED LOGO SIGN. ALL PRIMARY WIRING BY E.C. TO THE SIGN MUST BE PER UL2161 FOR GFCI SIGN TRANSFORMERS UL2161 REQUIRES THAT ALL CIRCUITS MUST HAVE A DEDICATED HOT, NEUTRAL & GROUND TERMINATING AT THE ELECTRICAL PANEL. CIRCUIT THRU LIGHTSTAT CONTACTOR. COORDINATE J-BOX LOCATIONS WITH SIGN CONTRACTOR PRIOR TO ROUGHIN. SEE ARCHITECTURAL STROEFRONT SECTIONS FOR CLARIFICATION.
36. PROVIDE 120V CONNECTION TO MOTORIZED SECURITY SHUTTER. PROVIDE ALL BACK BOXES, CONDUITS, CONDUCTORS, CONNECTIONS ETC. TO CONTROL STATION. COORDINATE EXACT REQUIREMENTS IN FIELD.
37. PROVIDE MAINTENANCE LIGHT FIXTURE AND DUPLEX RECEPTACLE MOUNTED ADJACENT TO VAV'S
38. ADD (1) NEW HOMERUN FROM ELECTRICAL PANEL TO STOREFRONT TO TERMINALS IN PLUG MOLD TO BE INSTALLED VIA CLOSEST DEMISING WALL OR COLUMN. CONCEALED BEHIND DRYWALL TO PLUG MOLD TO BE SUPPLIED AND INSTALLED BY E.C. AT STOREFRONT GLAZING BASE.
39. PROVIDE J-BOX FOR PLUGMOLD MOUNTED ALONG BASE OF STOREFRONT WINDOW.
40. APPROXIMATE LOCATION OF EXISTING ELECTRICAL SERVICE. G.C. TO PROVIDE AN ACCESSIBLE J-BOX/PULL-BOX CUT AND EXTEND CONDUIT/WIRE/TO NEW TENANT ELECTRICAL LOCATION.
41. PROVIDE POWER REQUIREMENTS TO SMOKE DAMPER.

BROWN SHOE COMPANY, INC.
8300 Maryland Ave.
Clayton, MO 63105
314/854-4000
BROWN SHOE COMPANY

09/15/2014	BID & PERMIT
09/27/2014	(2) LANDLORD COMMENTS

d p c e
don penn ▪ consulting engineer
635 Westport Parkway
Suite 300
Grapevine, Texas 76051
Phone: 817-410-2858
Fax: 817-251-8411

PROHIBITION ON REUSE:
INFORMATION CONTAINED IN THESE DRAWINGS AND SPECIFICATIONS WAS PREPARED FOR USE ON THE SPECIFIC SITE INDICATED. USE OF THIS INFORMATION ON ANOTHER PROJECT IS PROHIBITED AND CONTRARY TO LAW UNLESS EXPRESSLY AUTHORIZED IN WRITING BY THE AUTHOR.

THESE DRAWINGS AND SPECIFICATIONS ARE AND SHALL REMAIN THE PROPERTY OF THE BROWN SHOE, INC. DISPLAY, REPRODUCTION, OR USE FOR ANY BUT THE SPECIFICALLY AGREED UPON PURPOSES, WITHOUT THE WRITTEN AUTHORIZATION OF BROWN SHOE, INC. IS STRICTLY PROHIBITED.

COPYRIGHT NOTICE:
THESE DRAWINGS AND SPECIFICATIONS ARE SUBJECT TO COPYRIGHT PROTECTION AS AN "ARCHITECTURAL WORK" UNDER SEC. 102 OF THE COPYRIGHT ACT, 17 U.S.C. AS AMENDED DECEMBER 1990; KNOWN AS THE ARCHITECTURAL WORKS COPYRIGHT PROTECTION ACT OF 1990. THE PROTECTION INCLUDES, WITHOUT LIMITATION, THE OVERALL FORM, ARRANGEMENT, AND COMPOSITION OF SPACES AND ELEMENTS OF THE DESIGN.

FAMOUS footwear
STORE #3406
NORTH POINT MALL
1000 NORTH POINT CIR SUITE 2208
ALPHARETTA, GA 30022

DESIGNED BY:	DP
DRAWN BY:	MJ
CHECKED BY:	DP
DATE:	09/27/14
PROTO. VER.:	010413
PROJECT NO:	140341

POWER PLAN

E1.0

COPYRIGHT ©2014 BY BROWN SHOE, INC. PROTOTYPE VERSION: 010413 208V/ ELEC/ LIGHTSTAT

POWER RISER DIAGRAM

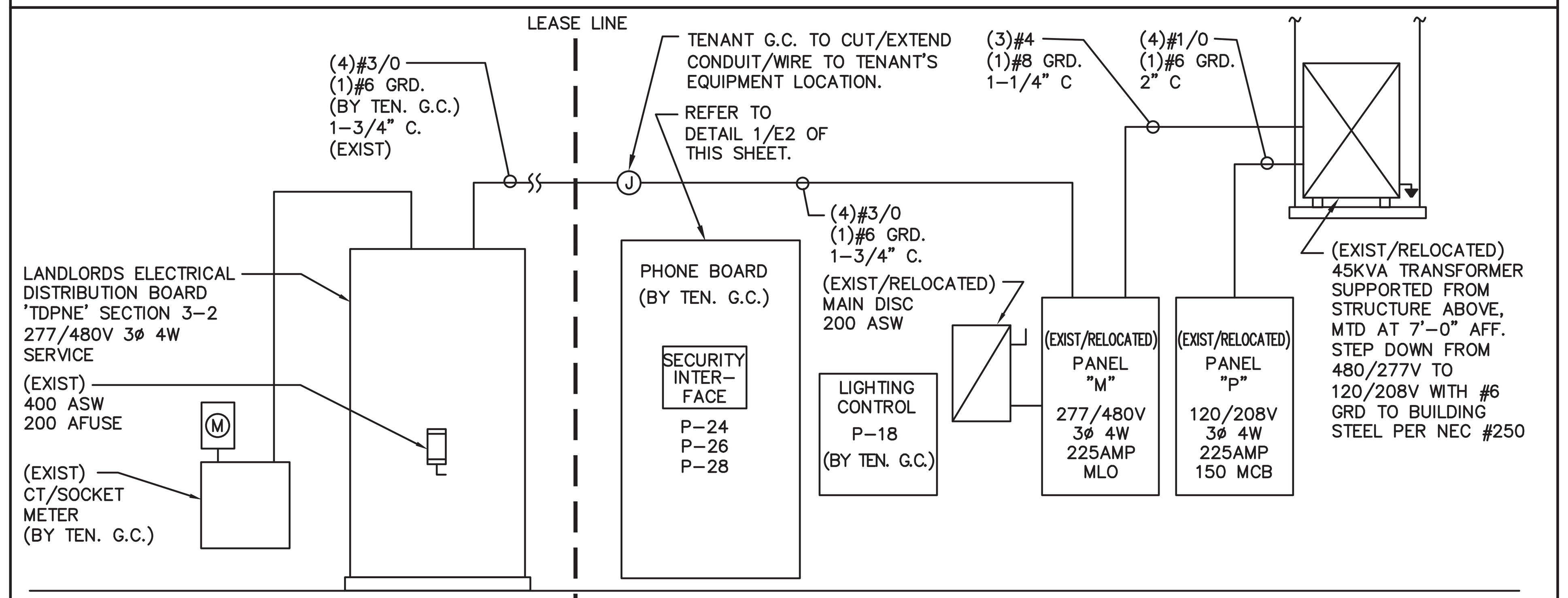

THE ELECTRICAL CONTRACTOR'S SUB-CONTRACTOR IS RESPONSIBLE FOR CHECKING ALL VOLTAGES ON PLANS UPON FIRST VISIT TO THE SITE. THE INCOMING SERVICE SHOULD CORRESPOND TO THE SPECIFICATIONS FOR THE LIGHTING FIXTURES AND THE H.V.A.C. EQUIPMENT AND BE PROPERLY NOTED ON THE ELECTRICAL PANEL DIAGRAMS AND RISERS. ANY DISCREPANCIES SHOULD BE REPORTED TO THE ARCHITECT IMMEDIATELY.

△2 * TENANT'S G.C.'S ELECTRICAL SUB-CONTRACTOR TO VERIFY EXISTING SERVICE/WIRE CONDUIT DURING BIDDING STAGE AND REPORT TO TENANT ARCHITECT ANY DISCREPANCIES THAT IS DIFFERENT THAN SHOWN ON PLANS.

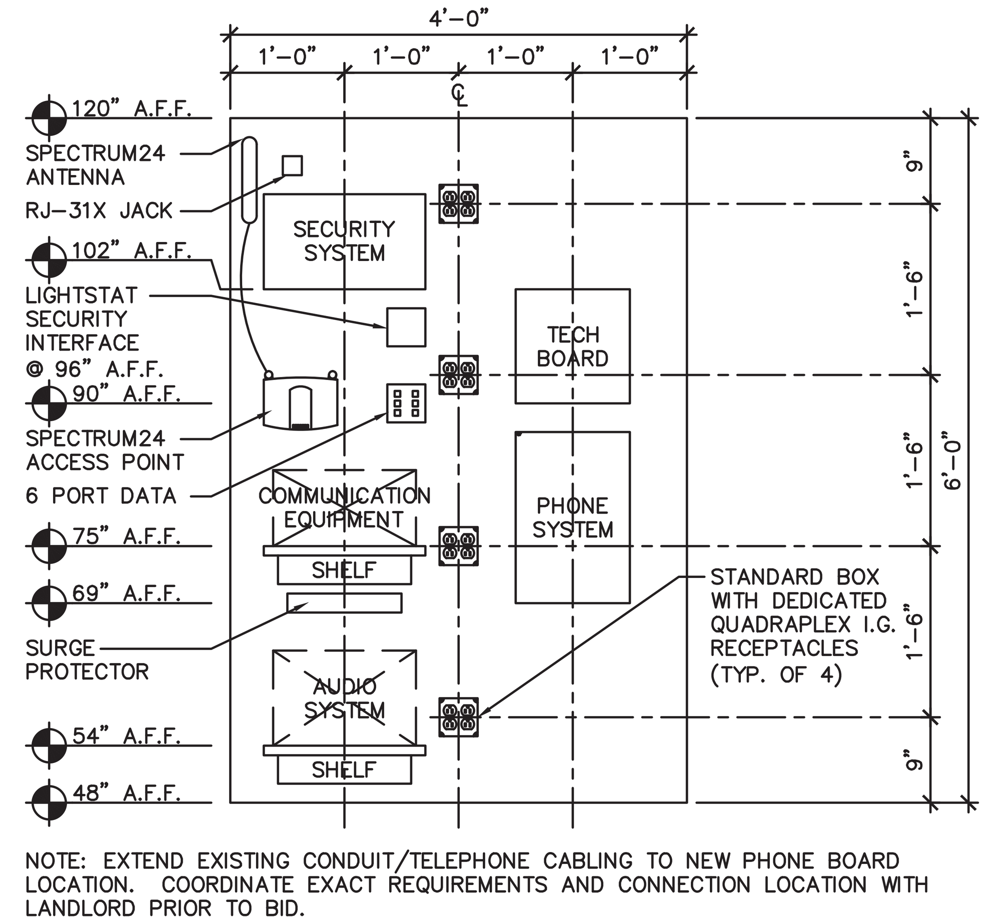

NOTE: EXTEND EXISTING CONDUIT/TELEPHONE CABLING TO NEW PHONE BOARD LOCATION. COORDINATE EXACT REQUIREMENTS AND CONNECTION LOCATION WITH LANDLORD PRIOR TO BID.

1/E2.0 PHONE BOARD DETAIL
SCALE: NOT TO SCALE

PANEL M (EXISITNG)

277/480V, 3PH, 4WIRE			BUS RATING: 225 AMP	MAIN: MLO		
A.I.C. RATING: 14,000			SPACES: 42 POLE	MOUNT: SURFACE		
NOTES	CKT	CKT BRKR	LOAD DESCRIPTION	LOADS (VA) A	B	C
1	1	20/1	Emergency/ Night Lighting	2613		
	3	20/1	Space			
4	5	20/1	2x4 Sales Lighting			2040
4	7	20/1	2x4 Sales Lighting	2040		
4	9	20/1	2x4 Sales Lighting		1920	
4	11	20/1	2X4 Sales Lighting			1560
4	13	20/1	Perimeter Lighting	448		
4	15	20/1	Perimeter Lighting		448	
4	17	20/1	Perimeter Lighting			392
4	19	20/1	Work Room Lighting	284		
	21	20/1	Space		–	
	23	20/1	Space			–
	25	20/1	Space	–		
	27	20/1	Space		–	
	29	20/1	Space			–
	31	20/1	Space	–		
	33	20/1	Space		–	
	35	20/1	Space			–
	37	20/1	Space	–		
	39	20/1	Space		–	
	41	20/1	Space			–
1	2	70/3	Transformer	6840		
	4				6404	
	6					7896
1,3	8	30/3	VAV-1	6925		
	10				6925	
	12					6925
1,3	14	30/3	VAV-2	6925		
	16				6925	
	18					6925
	20	20/1	Space	–		
	22	20/1	Space		–	
	24	20/1	Space			–
	26	20/1	Space	–		
	28	20/1	Space		–	
	30	20/1	Space			–
	32	20/1	Space	–		
	34	20/1	Space		–	
	36	20/1	Space			–
	38	20/1	Space	–		
	40	20/1	Space		–	
	42	20/1	Space			–
			LOAD	26075	22622	25738
			AMP	94.1	81.7	92.9
			TOTAL KVA			74.4
			TOTAL AMPS			89.6

1. Provide Handle Clip Style Lock On Breaker
2. Circuit Via Timeclock Controlled Contactor
3. Provide HACR Rated Breaker
4. Circuit Thru Lightstat System Contactor

PANEL P (EXISTING)

120/208V, 3PH,4 WIRE			BUS RATING: 225 AMP	MAIN: 150 A MCB		
A.I.C. RATING: 10,000			SPACES: 42 POLE	MOUNT: SURFACE		
NOTES	CKT	CKT BRKR	LOAD DESCRIPTION	LOADS (VA) A	B	C
1,4	1	20/1	Front Sign	1200		
1,4	3	20/1	Front Sign		1200	
1,4	5	20/1	Front Sign			1200
1,4	7	20/1	Front Sign	1200		
1,4	9	20/1	Side Sign		1200	
1,4	11	20/1	Side Sign			1200
	13	20/1	Spare	–		
	15	20/1	Spare		–	
	17	20/1	Spare			–
	19	20/1	Spare	–		
	21	20/1	Spare		–	
1	23	20/1	Storefront Plugmold			900
	25	20/1	Spare	–		
4	27	20/1	Cashwrap Lighting		72	
4	29	20/1	Lighting Displays			384
	31	20/1	Spare	–		
1,4	33	20/1	Storefront Lights		312	
1	35	20/1	Duct Smoke Detector			200
	37	20/1	Spare	–		
1	39	20/1	Storefront Shutters		1000	
1	41	20/1	Water Heater			1500
1	2	20/1	Cashwrap IG Quad Receptacle	360		
1	4	20/1	Cashwrap IG Quad Receptacle		360	
1	6	20/1	Work Station Quad Receptacle			360
1	8	20/1	Work Station Quad Receptacle	360		
1	10	20/1	Smoke Dampers		100	
	12	20/1	Toilet Rm. Exhaust Fans			72
1	14	20/1	Work Room Receptacles/ Buzzer	820		
1	16	20/1	REAR DOOR ALARM		180	
1	18	20/1	Lightstat Lighting Control			100
	20	20/1	Plenum Light / Receptacle	560		
	22	20/1	Toilet Room Receptacles		360	
1	24	20/1	Phone Board IG Quad Recept.			360
1	26	20/1	Phone Board IG Quad Recept.	360		
1	28	20/1	Phone Board IG Quad Recept.		360	
1	30	20/1	Phone Board IG Quad Recept.			360
	32	20/1	Show Window Receptacles	360		
	34	20/1	Show Window Receptacles		360	
1	36	20/1	Focal Wall Monitor			360
4	38	20/1	Illuminated Display Shelf	1620		
	40	20/1	Sales Receptacles		900	
	42	20/1	Sales Receptacles			900
			LOAD	6840	6404	7896
			AMP	57	53.4	65.8
			TOTAL KVA			21.1
			TOTAL AMPS			58.7

1. Provide Handle Clip Style Lock On Breaker
2. Circuit Via Timeclock Controlled Contactor
3. Provide HACR Rated Breaker
4. Circuit Thru Lightstat System Contactor

Provide panel with isolated ground bar

LIGHTING CONTROL DIAGRAM

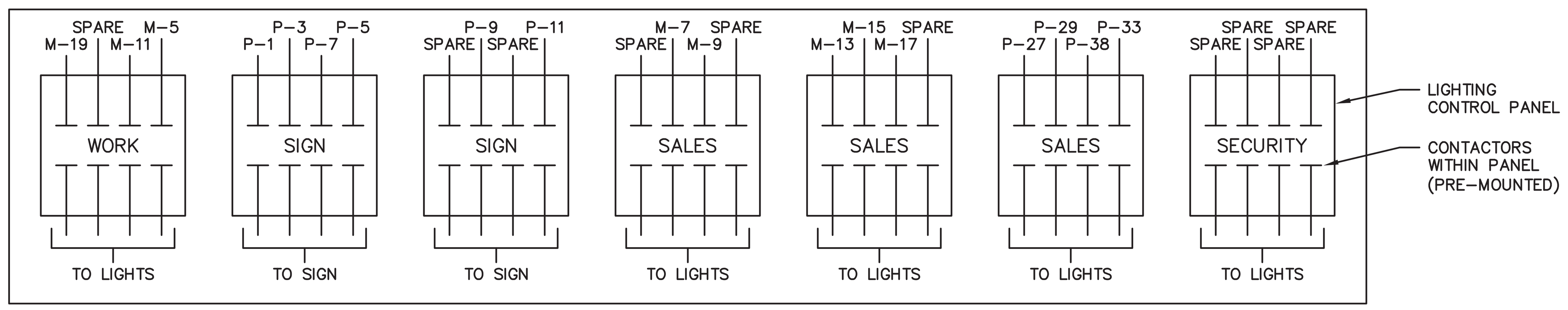

LOAD CONNECTIONS TO LIGHTS ON BOTTOM TERMINALS. SPARE CONTACTOR POLES WILL ALLOW FOR FUTURE LOADS

GENERAL NOTES:
LIGHTSTAT THERMOSTATS HAVE FACTORY INSTALLED PRESET TEMPERATURE RANGES TO PREVENT EMPLOYEE TAMPERING. THE ZERO PROGRAMMING AND AUTOMATIC NIGHT SETBACK FEATURES ARE DESIGNED SO THERE IS NO NEED FOR EMPLOYEES TO MANAGE THE SYSTEM.

SIGNAGE CONTACTOR OPERATION IS CONTROLLED BY THE OPEN/CLOSE BUTTON WHICH ALSO CONTROLS THE SALES LIGHTING.

LIGHTSTAT ENERGY MANAGEMENT SYSTEM PROVIDED BY E.C.. REFER TO SHEET A1 FOR LIGHTSTAT CONTACT INFORMATION. REFER TO LIGHTSTAT SHOP DRAWINGS FOR WIRING DIAGRAM AND COLOR CODE REQUIREMENTS.

CIRCUIT WIRING INDICATED WITH INSTALLATION DRAWING PROVIDED BY THE MANUFACTURER WITH THE EQUIPMENT PACKAGE IS STORE SPECIFIC. IN THE EVENT OF DISCREPANCIES THE MANUFACTURER'S WIRING DIAGRAM SUPERSEDES THE INFORMATION INDICATED HERE.

ITEMS INCLUDED WITH SYSTEM:
- LARGE CABINET SYSTEM ALT-3-20-3-FFW
- PASSIVE INFRARED MOTION DETECTORS
- PUSH BUTTON STATION
- OUTDOOR LIGHT SENSOR
- LIGHTSTAT TME-AVU-CC THERMOSTATS
- LIGHTSTAT TME-RRS REMOTE TEMPERATURE SENSORS
- THERMOSTAT INTERFACE
- SECURITY ALARM INTERFACE
- COLOR CODED LOW VOLTAGE CABLES

NOTE: LIGHTSTAT ASSEMBLES THE SYSTEM PACKAGES SPECIFICALLY DESIGNED FOR EACH INDIVIDUAL STORE, SO NOT ALL COMPONENTS LISTED ABOVE MAY BE INCLUDED.

ELECTRICAL SYMBOL LEGEND

CEILING MOUNTED JUNCTION BOX	WALL MOUNTED MANUAL PULL STATION
WALL MOUNTED JUNCTION BOX	PHOTOELECTRIC DETECTOR
WALL MOUNTED JUNCTION BOX WITH SWITCH	IONIZATION DETECTOR
CEILING MOUNTED DUPLEX RECEPTACLE	HEAT DETECTOR
WALL MOUNTED DUPLEX RECEPTACLE	DUCT SMOKE DETECTOR
WALL MOUNTED FOURPLEX RECEPTACLE	FLOW SWITCH
WALL MOUNTED DUPLEX RECEPTACLE, GFI	TAMPER SWITCH
DUPLEX RECEPTACLE, WEATHER PROOF GFI	WALL MOUNTED HORN
TRANSFORMER	WALL MOUNTED HORN STROBE
PUSH BUTTON SWITCH	WALL MOUNTED STROBE
BELL	CEILING MOUNTED STROBE
BUZZER	WALL MOUNTED SPEAKER/ STROBE
CHIME	CEILING MOUNTED SPEAKER/ STROBE
THERMOSTAT	
REMOTE TEMPERATURE SENSOR	
CEILING MOUNTED SPEAKER	
PHONE JACK	
DATA/ PHONE JACK	
TIME SWITCH	
CONTACTOR	
FUSED DISCONNECT	
NON-FUSED DISCONNECT	
MOTOR STARTER	
CEILING MOUNTED MOTION SENSOR	
DAYLIGHT SENSOR	
WALL SWITCH	
WALL SWITCH WITH OCCUPANCY SENSOR	

OCCUPANCY SENSOR WIRING DIAGRAM

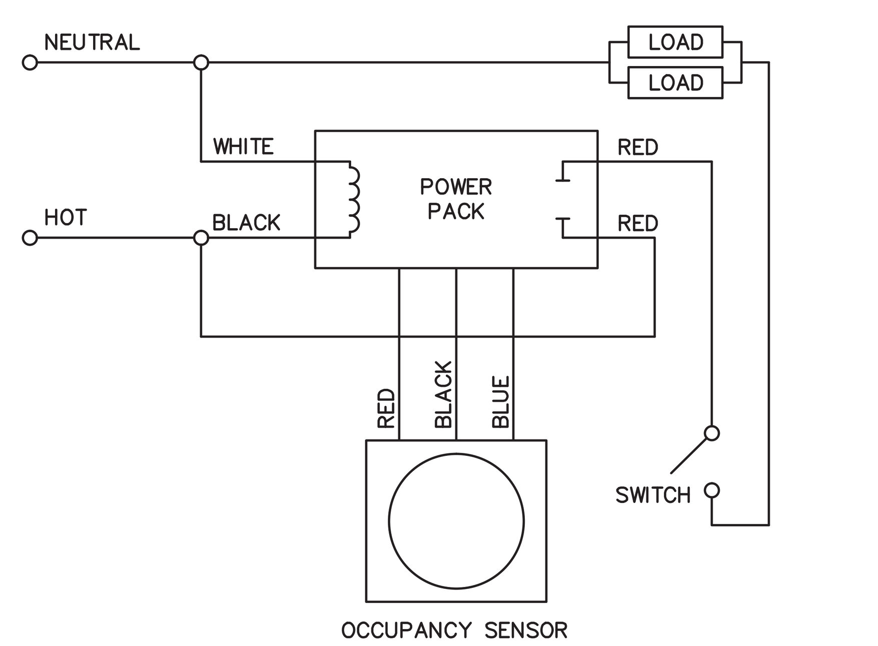

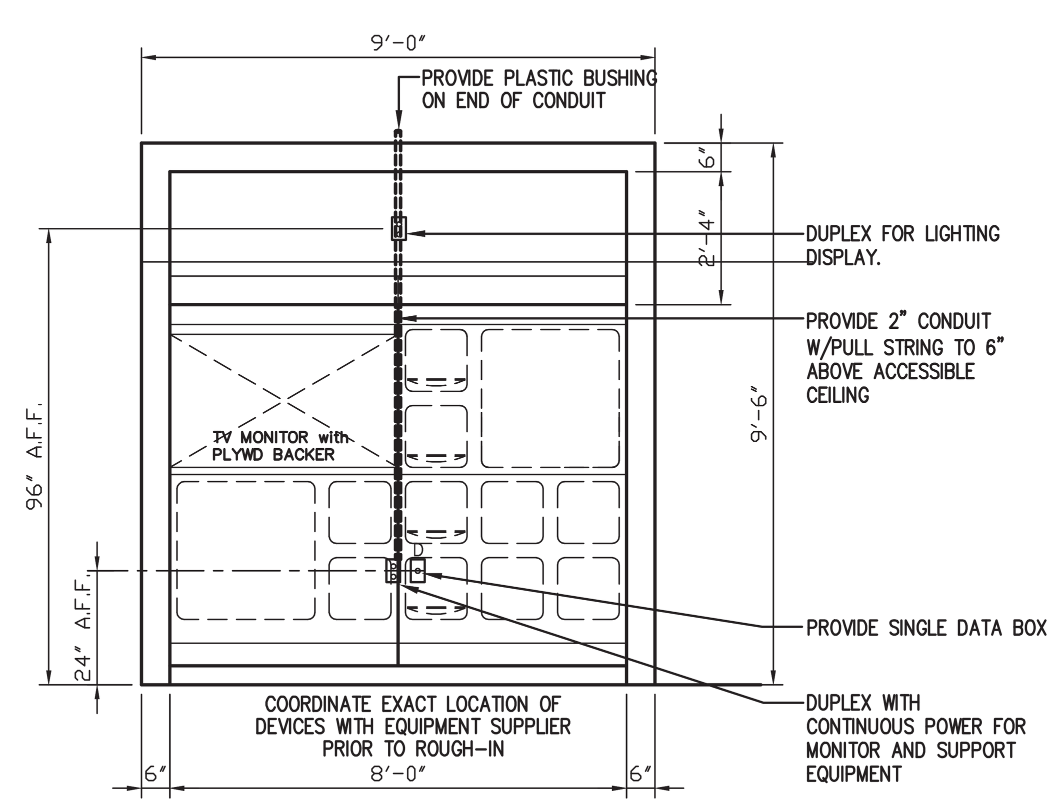

2/E2.0 VIDEO WALL ELEVATION
SCALE: 1/8" = 1'-0"

NOTES:
1. CONSULT WITH LANDLORD'S STRUCTURAL ENGINEER FOR LOCATION AND HANGING REQUIREMENTS FOR EQUIPMENT 300 LBS. OR MORE.
2. SIZE OF STRUCTURAL SUPPORTS (ROD ANGLES, ETC.) ARE MIN. AND SHALL BE SIZED BY TENANT OR TENANT'S CONTRACTOR AS REQUIRED FOR PROPER SUPPORT AND STRUCTURAL INTEGRITY.
3. DO NOT DRILL HOLES IN EXISTING STRUCTURAL MEMBERS UNLESS APPROVED BY LANDLORD IN WRITING.
4. ATTACHMENT TO TOP CHORD OF TRUSS IS REQUIRED.

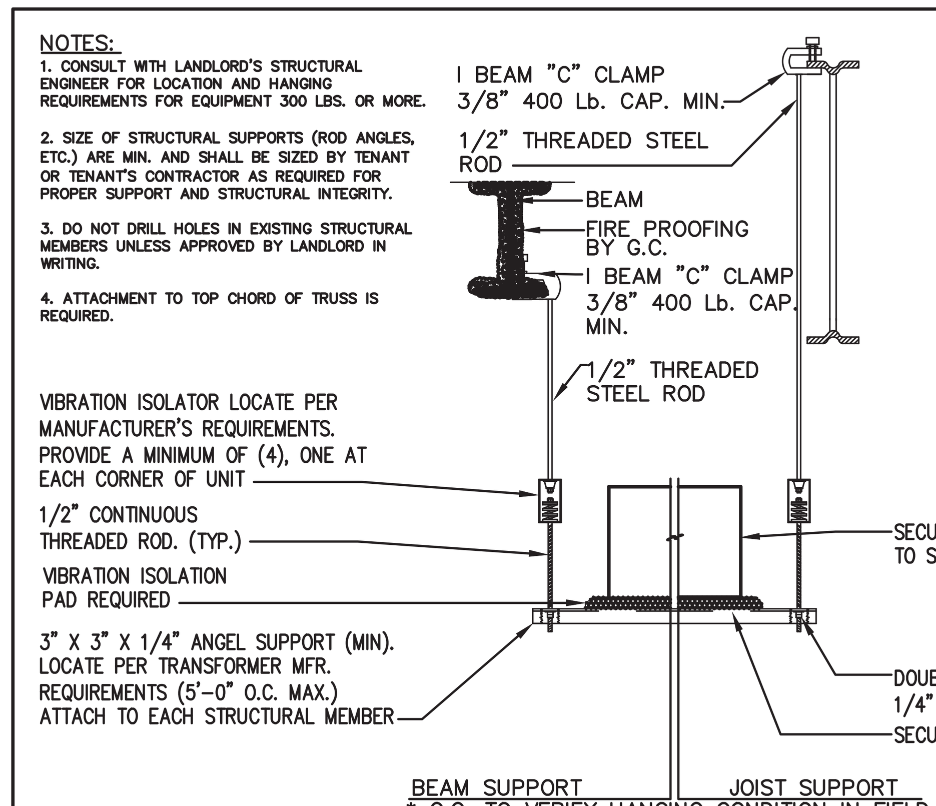

* G.C. TO VERIFY HANGING CONDITION IN FIELD.

3/E2.0 TRANSFORMER SUPPORT DETAIL
SCALE: NOT TO SCALE

BROWN SHOE COMPANY, INC.
8300 Maryland Ave.
Clayton, MO 63105
314/854-4000
BROWN SHOE COMPANY

Date	Revision
09/15/2014	BID & PERMIT
09/27/2014	△2 LANDLORD COMMENTS

d p c e
don penn ▪ consulting engineer
635 Westport Parkway
Suite 300
Grapevine, Texas 76051
Phone: 817-410-2858
Fax: 817-251-8411

PROHIBITION ON REUSE: INFORMATION CONTAINED IN THESE DRAWINGS AND SPECIFICATIONS WAS PREPARED FOR USE ON THE SPECIFIC SITE INDICATED. USE OF THIS INFORMATION ON ANOTHER PROJECT IS PROHIBITED AND CONTRARY TO LAW UNLESS EXPRESSLY AUTHORIZED IN WRITING BY THE AUTHOR.
THESE DRAWINGS AND SPECIFICATIONS ARE AND SHALL REMAIN THE PROPERTY OF THE BROWN SHOE, INC. DISPLAY, REPRODUCTION, OR USE FOR ANY BUT THE SPECIFICALLY AGREED UPON PURPOSES, WITHOUT THE WRITTEN AUTHORIZATION OF BROWN SHOE, INC. IS STRICTLY PROHIBITED.
COPYRIGHT NOTICE: THESE DRAWINGS AND SPECIFICATIONS ARE SUBJECT TO COPYRIGHT PROTECTION AS AN "ARCHITECTURAL WORK" UNDER SEC. 102 OF THE COPYRIGHT ACT, 17 U.S.C. AS AMENDED DECEMBER 1990; KNOWN AS THE ARCHITECTURAL WORKS COPYRIGHT PROTECTION ACT OF 1990. THE PROTECTION INCLUDES, WITHOUT LIMITATION, THE OVERALL FORM, ARRANGEMENT, AND COMPOSITION OF SPACES AND ELEMENTS OF THE DESIGN.

FAMOUS footwear
STORE #3406
NORTH POINT MALL
1000 NORTH POINT CIR SUITE 2208
ALPHARETTA, GA 30022

DESIGNED BY: DP
DRAWN BY: MJ
CHECKED BY: DP
DATE: 09/27/14
PROTO. VER.: 010413
PROJECT NO: 140341

DETAILS & SCHEDULES

E2.0

COPYRIGHT ©2014 BY BROWN SHOE, INC. PROTOTYPE VERSION: 010413 480V/ ELEC/ LIGHTSTAT

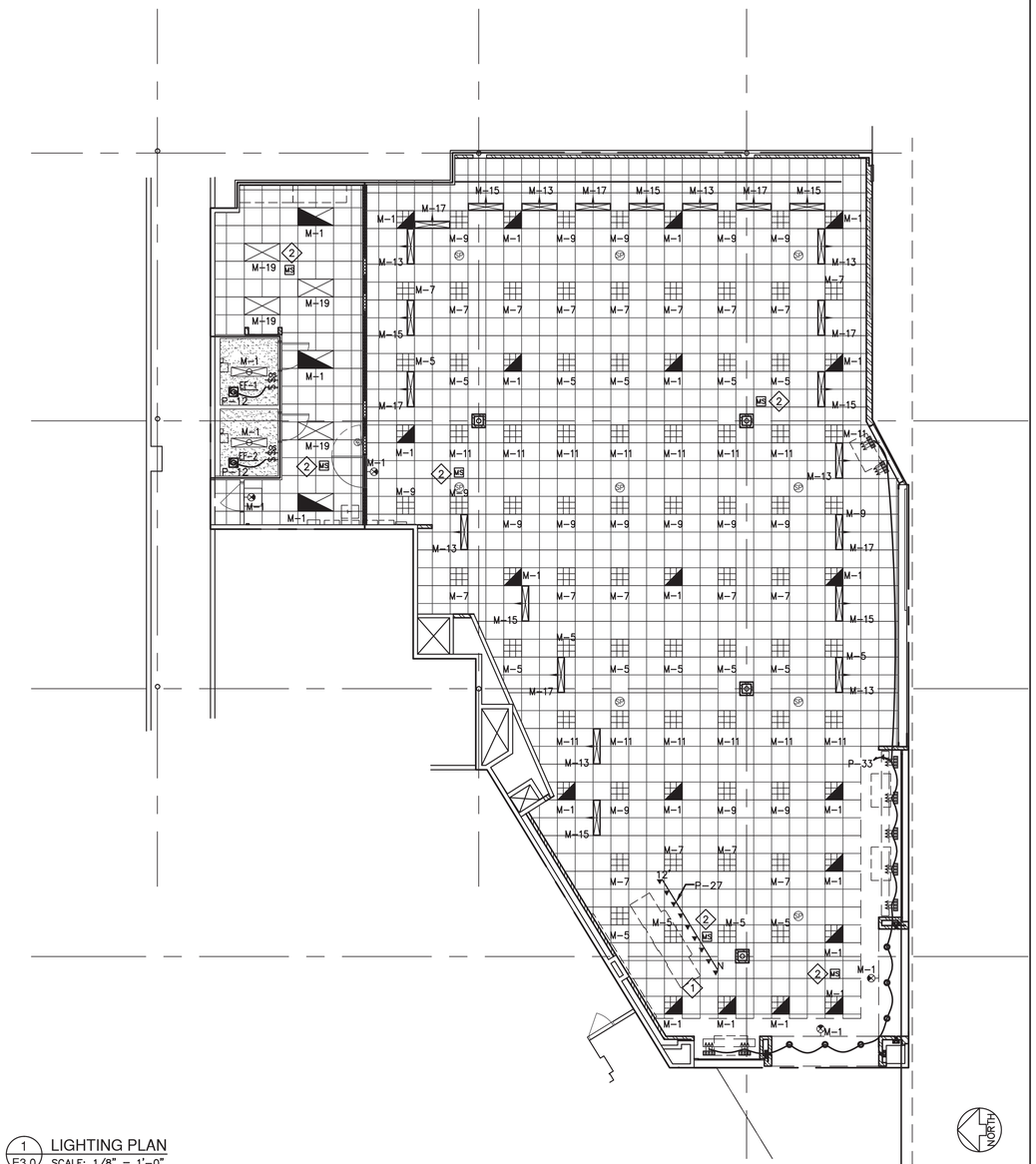

1 LIGHTING PLAN
E3.0 SCALE: 1/8" = 1'-0"

KEYED NOTES

1. REMOTE LIGHTSTAT PUSH-BUTTON PROVIDED BY E.C.. PUSH-BUTTON UNIT FOR ACTIVATION OF SALES LIGHTS. YELLOW COLORED LOW VOLTAGE PLENUM RATED CABLE TO BE USED TO CONNECT TO LIGHTING CONTROL PANEL. REFER TO LIGHTSTAT SHOP DRAWINGS FOR EXACT REQUIREMENTS.

2. (6) LIGHTSTAT MOTION SENSORS PROVIDED BY LIGHTSTAT WIRED IN PARALLEL. BLUE COLORED LOW VOLTAGE PLENUM RATED CABLE SHALL BE USED TO CONNECT MOTION SENSORS TO LIGHTING CONTROL PANEL. REFER TO LIGHTSTAT SHOP DRAWINGS FOR EXACT REQUIREMENTS.

GENERAL NOTES

1. COORDINATE EMERGENCY LIGHTING AND EXIT LIGHT REQUIREMENTS WITH LOCAL AUTHORITIES.
2. ALL LINE VOLTAGE WIRING LOCATED IN RETURN AIR PLENUMS SHALL BE ROUTED IN CONDUIT TO MEET LOCAL CODE. COORDINATE REQUIREMENTS WITH HVAC CONTRACTOR. ALL LOW VOLTAGE WIRING LOCATED ABOVE CEILING LEVEL AND CONCEALED IN WALLS SHALL BE PER CODE, NO EXCEPTIONS.
3. THE MEANS OF EGRESS EMERGENCY LIGHTING ILLUMINATION LEVEL SHALL NOT BE LESS THAN 1 FOOT-CANDLE MEASURED AT THE FLOOR LEVEL. THE E.C. SHALL CONFIRM COMPLIANCE PRIOR TO THE CERTIFICATE OF OCCUPANCY INSPECTION BEING PERFORMED.

LIGHT FIXTURE SCHEDULE

MARK	DESCRIPTION	MANUFACTURER	VOLTS	LAMPS WATT	LAMPS QTY	LAMPS MODEL	NOTES
	2'X4',3 LAMP LAY-IN FIXTURE WITH ACRYLIC PRISMATIC LENS AND T8 LAMPS/ ENERGY SAVING BALLASTS	METALUX, 2GR8-332A-UNV-OS-QHE3X32T8UNVISNSC-U (120V= 73W, 277V= 71W TOTAL)	277	28	3	SYLVANIA FO28/835/ XP/SS/ECO	3,4
	2'X4',3 LAMP LAY-IN EMERGENCY NIGHT LIGHT FIXTURE WITH ACRYLIC PRISMATIC LENS AND T8 LAMPS/ ENERGY SAVING BALLASTS	METALUX, 2GR8-332A-XXX-EL-FBP240U-OS-QHE3X32T8UNVISNSC-U (120V= 73W, 277V= 71W TOTAL)	277	28	3	SYLVANIA FO28/835/ XP/SS/ECO	1,3,4
	10"X4', 2 LAMP RECESSED FLUOR. WALL WASHER/ ENERGY SAVING BALLASTS	COLUMBIA FW-104-232-E120-OS-QHE2X32T8UNVISNSC (120V= 47W, 277V= 46W TOTAL)	277	28	2	SYLVANIA FO28/835/ XP/SS/ECO	3,4,6
	2'X2',3 LAMP LAY-IN FIXTURE WITH WHITE NARROW CELL PARABOLIC LENS AND T8 LAMPS/ BALLASTS	METALUX, 2EP3GAX3BX40W33P-UNV-EB51	277	40	3	SYLVANIA FT40DL/835 /RS	3,4
	2'X2',3 LAMP LAY-IN EMERGENCY NIGHT LIGHT FIXTURE WITH WHITE NARROW CELL PARABOLIC LENS AND T8 LAMPS/ BALLASTS	METALUX, 2EP3GAX3BX40W33P-277-EB51-EL4	277	40	3	SYLVANIA FT40DL/835 /RS	1,3,4
	1'X4',2 LAMP SURFACE MOUNTED EMERGENCY NIGHT LIGHT FIXTURE WITH ACRYLIC PRISMATIC LENS, T8 LAMPS/ ENERGY SAVING BALLASTS	METALUX, W-232-A-UNV-EL-FB240U-OS-QHE2X32T8UNVSNSC-U (120V= 59W, 277V= 59W TOTAL)	277	28	2	SYLVANIA FO28/835/ XP/SS/ECO	3,4
	HALO TRACK HEAD TRACK MOUNTED LED	HALO-L703P	120	–	2	HALO PAR38 LED 3000KWW NFL 120V	3,7
	LIGHT TRACK IN LENGTHS AS INDICATED ON PLAN	HALO – LZR104P	120	–	–	–	3,7
	WALL MOUNTED EXIT SIGN WITH 90 MINUTE BATTERY BACK UP	SURELITE, AP70RWH	277	2.8	12	LED LAMPS	2,3,4
	CEILING MOUNTED EXIT SIGN WITH 90 MINUTE BATTERY BACK UP	SURELITE, AP70RWH	277	2.8	12	LED LAMPS	2,3,4
	SURFACE MOUNTED EXTERIOR LIGHTING FIXTURE	LUMARK XTOR-3A	120	70	1	METAL HALIDE MP70/U/MED	3,7
	EXTERIOR WALL MOUNTED LED LIGHTING FIXTURE	MULE – MAKO3WHPCLW	277	–	–	–	3,4
	RECESSED CEILING MOUNTED SPEAKER						5
	RECESSED 3 LIGHT LED – ADJUSTABLE	HORNET – 3-12-LED-E-WT-120-FL-WT-3000	120	36	4	AMERLUX	3
	6" ROUND LED DOWNLIGHT	SVAII-34-LED-E-SD-W-120-FL-3000	120	32	4	AMERLUX	3

FIXTURE SCHEDULE NOTES:

1. FURNISH WITH EMERGENCY BALLAST AND BATTERY PACK TO SERVE AS A NIGHT LIGHT DURING NORMAL OPERATION AND AS EMERGENCY LIGHTING DURING POWER INTERRUPTION.
2. CEILING MOUNT: CENTERED ON DOOR AND 10" FROM WALL. ALL OTHERS AS INDICATED. WALL MOUNT: CENTERED 6" ABOVE DOOR FRAME.
3. ALL LIGHT FIXTURES AND LAMPS PURCHASED THROUGH CITY LIGHTING PRODUCTS UNDER A NATIONAL PURCHASE AGREEMENT. REFER TO VENDOR CONTACTS, SHEET A1.0.
4. MODEL SPECIFICATIONS INDICATED INCLUDE UNIVERSAL VOLTAGE BALLASTS. CONFIRM WIRING INSTRUCTIONS FOR FIELD SPECIFIC VOLTAGE WITH LIGHTING SUPPLIER PRIOR TO INSTALLING FIXTURES.
5. AUDIO SYSTEM SPEAKERS TO BE PURCHASED THROUGH MOOD MEDIA UNDER A NATIONAL PURCHASE AGREEMENT. REFER TO VENDOR CONTACTS, SHEET A1.0.
6. LIGHT TO BE DIRECTED TOWARD THE WALL.
7. INSTALL TRACK LIGHTING ONLY AFTER THE VICTORY FIXTURE DISPLAY UNITS AND CASHWRAP HAVE BEEN PROPERLY INSTALLED. NO EXCEPTIONS.

BROWN SHOE COMPANY, INC.
8300 Maryland Ave.
Clayton, MO 63105
314/854-4000
BROWN SHOE COMPANY

09/15/2014	BID & PERMIT
09/27/2014	2 LANDLORD COMMENTS

dpce
don penn ■ consulting engineer
655 Westport Parkway
Suite 300
Grapevine, Texas 76051
Phone: 817-329-2666
Fax: 817-251-9411

DISCRIPTION OF DESIGN:
THE DESIGN SHOWN IN THESE DRAWINGS AND SPECIFICATIONS IS A NOVEL DESIGN NOT ORDINARILY USED BY THE PROFESSIONS TO WHICH THEY PERTAIN. THEY ARE NOT INTENDED FOR USE ON THE PROJECT DESCRIBED HEREIN UNLESS THE ARCHITECT OF RECORD HAS ADAPTED THEM TO THE PROJECT AND MAKES SUCH FURTHER REVISIONS AS ARE ARCHITECTURALLY, STRUCTURALLY AND MECHANICALLY SUITABLE TO THE PROJECT. THE ARCHITECT OF RECORD DISCLAIMS ANY RESPONSIBILITY FOR THE ARCHITECTURAL, STRUCTURAL, MECHANICAL, ELECTRICAL AND OTHER ASPECTS OF THE PROJECT WHICH ARE NOT IN ACCORDANCE WITH THE ORIGINAL INTENT OF THE DESIGN.
COPYRIGHT NOTICE:
THESE DRAWINGS AND SPECIFICATIONS ARE SUBJECT TO COPYRIGHT PROTECTION AS AN "ARCHITECTURAL WORK" PURSUANT TO 17 U.S.C. 102 AND 101 OF THE U.S.C. AS AMENDED DECEMBER 1990. PURSUANT AT THE ARCHITECT OF RECORD. THE ARCHITECT OF RECORD RETAINS THE EXCLUSIVE RIGHTS TO THE ARCHITECTURAL WORK, INCLUDING THE RIGHT TO REPRODUCE THE ARCHITECTURAL WORK IN ANY FORM, TO PREPARE DERIVATIVE WORKS, AND TO DISTRIBUTE COPIES OF THE WORK TO THE PUBLIC BY SALE OR OTHER TRANSFER OF OWNERSHIP, OR BY RENTAL, LEASE, OR LENDING. THE ARCHITECT OF RECORD RETAINS OWNERSHIP OF THE DRAWINGS AND SPECIFICATIONS AND OTHER PROPERTY RIGHTS, INCLUDING COPYRIGHT, IN THE DESIGN, DRAWINGS AND SPECIFICATIONS. THE DRAWINGS AND SPECIFICATIONS MAY BE USED ONLY FOR THE PROJECT DESCRIBED HEREIN AND MAY NOT BE USED FOR OTHER PROJECTS, TO OVERCOME FORM, ARRANGEMENT, AND DESIGN OF SPACES AND ELEMENTS OF THE DESIGN.

FAMOUS footwear
STORE #3406
NORTH POINT MALL
1000 NORTH POINT CIR SUITE 2208
ALPHARETTA, GA 30022

DESIGNED BY:	DP
DRAWN BY:	MJ
CHECKED BY:	DP
DATE:	09/27/14
PROTO. VER.:	010413
PROJECT NO:	140341

LIGHTING PLAN

E3.0

COPYRIGHT © 2014 BY BROWN SHOE, INC. PROTOTYPE VERSION: 010413 208V/LIGHTSTAT

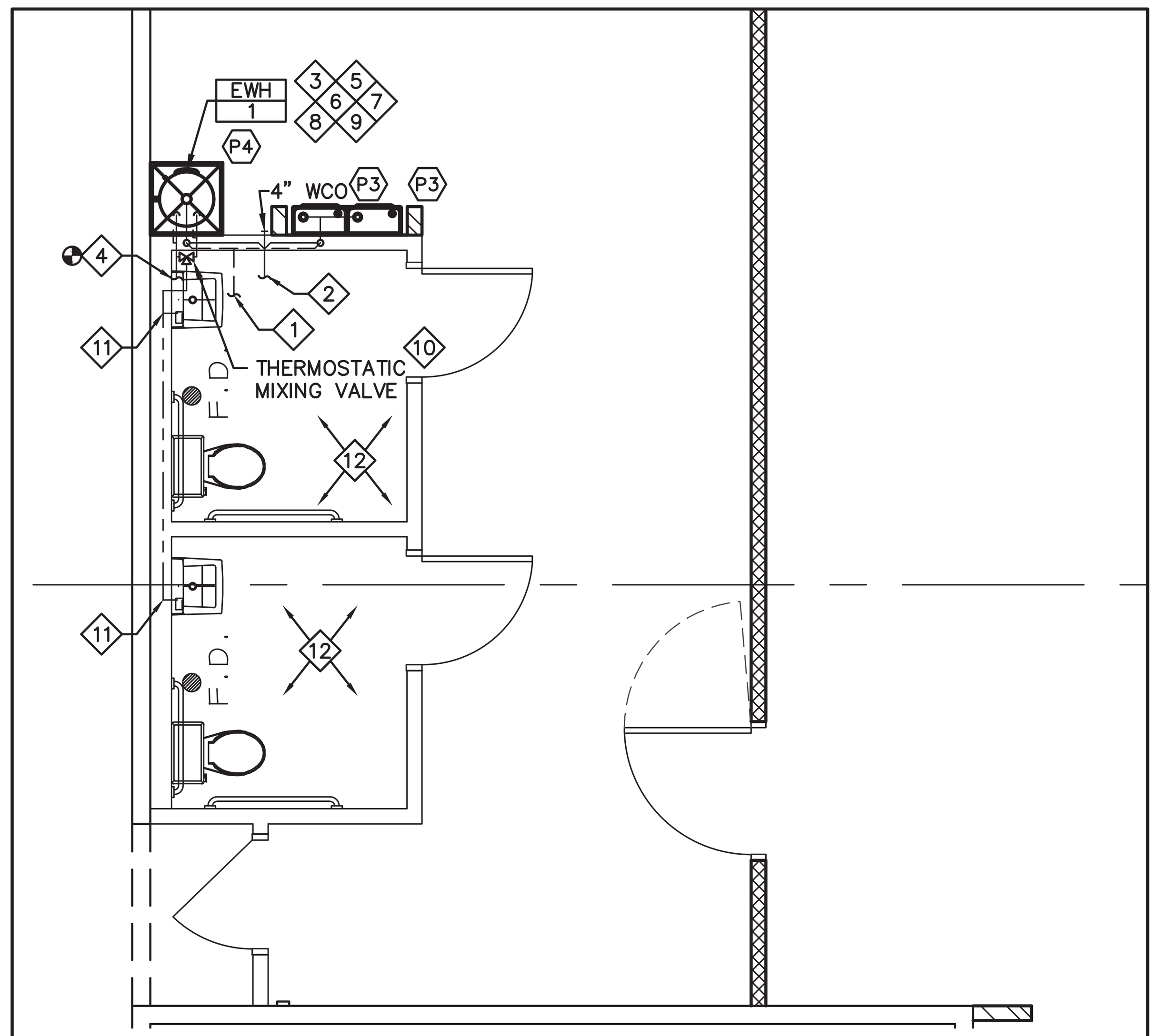

1 P1.0 PLUMBING PLAN
SCALE: 1/4" = 1'-0"

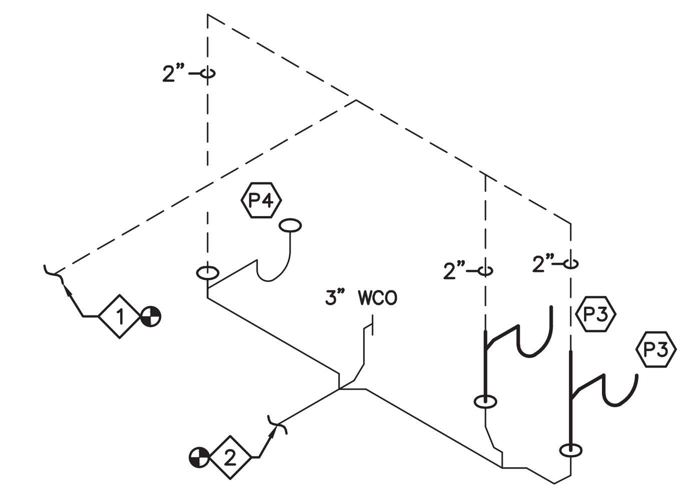

2 P1.0 WASTE AND VENT RISER
SCALE: NOT TO SCALE

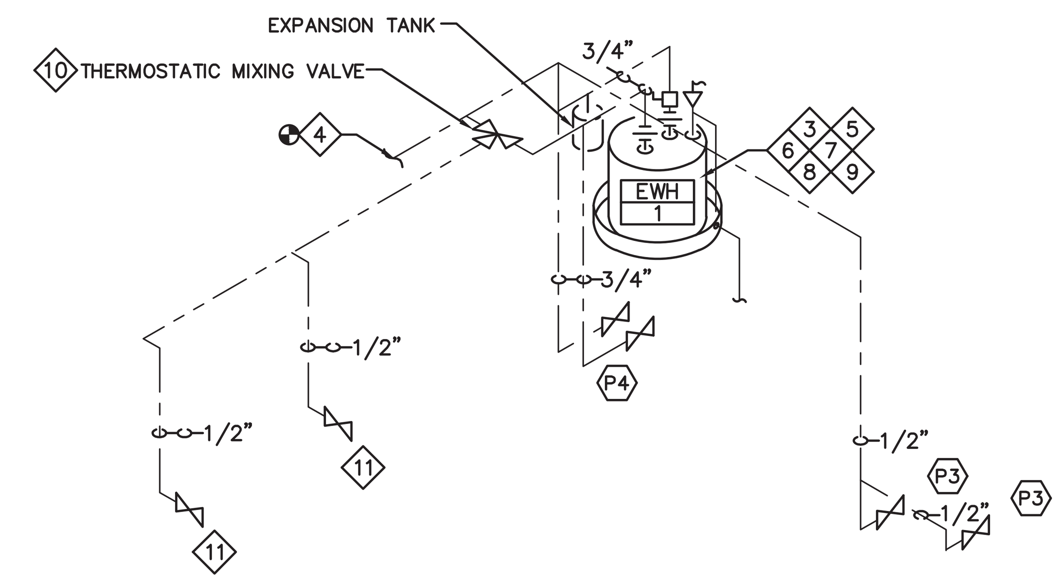

3 P1.0 WATER RISER
SCALE: NOT TO SCALE

GENERAL NOTES

1. REFER TO SHEETS A2.0 AND A5.0 FOR ADDITIONAL INFORMATION.
2. CONTRACTOR SHALL DESIGN AND HYDRAULICALLY CALCULATE THE NEW (AND RENOVATION OF EXISTING) SPRINKLER PIPING SYSTEMS, INCLUDING LOCATION OF ALL VALVES, DEVICES, AND SPRINKLER HEADS. DESIGN SPRINKLER SYSTEM PIPING BASED ON HAZARD RATING AS OF THE MOST STRINGENT OF THE REGULATING AGENCIES RESPONSIBLE FOR THIS FACILITY, INCLUDING THE OWNER'S INSURANCE COMPANY REQUIREMENTS AND THE GOVERNING AUTHORITIES AS DETERMINED BY LOCAL REQUIREMENTS. PERFORM WORK IN ACCORDANCE WITH NFPA 13.
3. PROVIDE SEMI-RECESSED SPRINKLER HEADS IN AREAS WITH LAY-IN CEILINGS. PROVIDE CONCEALED SPRINKLER HEADS IN SALES AREA DRYWALL CEILING.
4. SPACE ABOVE CEILING IS TO BE A RETURN AIR PLENUM. CONSTRUCTION MATERIALS ABOVE CEILING SHALL BE NONCOMBUSTIBLE, OR HAVE A MAXIMUM 25 FLAME SPREAD AND 50 SMOKE DEVELOPMENT FINISH RATING. WIRING SHALL BE LABELED PLENUM RATED TYPE PER NFPA 70.
5. CONTRACTOR SHALL CLEAN AND REFURBISH ALL PLUMBING FIXTURES IN RESTROOM, EXISTING TO REMAIN. REPAIR/REPLACE ALL ACCESSORIES AS REQUIRED FOR A COMPLETE AND OPERATIONAL PLUMBING FIXTURE. IF REQUIRED, COORDINATE REPLACEMENT OF PLUMBING FIXTURE WITH TENANT AND ARCHITECT. VERIFY IN FIELD, PRIOR TO BID.
6. WATER METER TO BE TIED INTO MALL EMS SYSTEM BY WAYPOINT SYSTEMS AT TENANT'S GENERAL CONTRACTORS EXPENSE. CANTACT MATT BENNETT 77.649.6100
7. SLEEVE AND SEAL ALL FLOOR PENETRATIONS LIQUID TIGHT AND INSTALL WATERPOOF FLOOR MEMBRANE AT ALL PLUMBING AREAS.
8. EMPLOY LANDLORD'S APPROVED CONTRACTOR TO VERIFY/ INSTALL WATER METER AND TO REPROGRAM WATER METER READ OUT ON THE MALL EMS.

KEYED NOTES

1. NEW 2" VENT TO EXISTING 2" (MINIMUM) VENT LINE FOR SPACE. CONTRACTOR SHALL COORDINATE EXACT LOCATION, ROUTING, AND CONNECTION POINT IN FIELD, PRIOR TO BID. PROVIDE NEW 3" VENT TO ROOF IF REQUIRED AND COORDINATE ALL ROOFWORK WITH LANDLORD'S ROOFING CONTRACTOR. MAINTAIN TERMINATION AT LEST 10'-0" FROM ANY OUTSIDE AIR INTAKE. COORDINATE ROUTING THROUGH TENANT'S SPACE ABOVE IF NEW VENT LINE IS REQUIRED.
2. NEW 3" SANITARY SEWER TO CONNECT TO EXISTING 4" (MINIMUM) SANITARY SEWER. FIELD VERIFY EXACT LOCATION, SIZE, FLOW DIRECTION, AND INVERT ELEVATION OF CONNECTION POINT PRIOR TO ROUGH-IN OF NEW SANITARY SEWER PIPING. PROVIDE CLEAN OUT AT POINT OF CONNECTION TO EXISTING.
3. HOT WATER HEATER MOUNTED ON PLATFORM BELOW THE CEILING OVER THE MOP SINK. REFER TO SHEET A7.0 FOR MOUNTING DETAIL.
4. NEW 3/4" COLD WATER PIPING TO CONNECT TO EXISTING COLD WATER SUPPLY PIPING. FIELD VERIFY EXACT LOCATION, SIZE, AND ELEVATION OF CONNECTION POINT PRIOR TO ROUGH-IN OF NEW WATER PIPING.
5. PIPE T&P RELIEF TO SAFE PAN. TERMINATE 2" ABOVE BOTTOM OF SAFE PAN.
6. PROVIDE 6" DEEP WATERPROOF SAFE PAN 4" LARGER EACH WAY THAN WATER HEATER.
7. PROVIDE 1 1/4" DRAIN LINE FROM SAFE PAN TO MOP SINK BELOW. ROUTE TIGHT TO WALL. TERMINATE 2 1/2" MINIMUM ABOVE THE FLOOD RIM OF THE MOP BASIN.
8. PROVIDE STATE MODEL ETC-2K THERMAL EXPANSION TANK (OR EQUAL). ADJUST AIR CHARGE TO MATCH FIELD VERIFIED INCOMING WATER PRESSURE.
9. PROVIDE WATTS MODEL N36 VACUUM RELIEF VALVE (OR EQUAL). INSTALL PER MANUFACTURER'S RECOMMENDATIONS.
10. THERMOSTATIC MIXING VALVE SET TO 110°F.
11. NEW 1/2" TEMPERED WATER PIPING TO BACKFEED EXISTING LAVATORIES IN RESTROOM. FIELD VERIFY EXACT LOCATION, SIZE, AND ELEVATION OF CONNECTION POINT PRIOR TO ROUGH-IN OF NEW WATER PIPING.
12. CONTRACTOR SHALL CLEAN AND REFURBISH ALL PLUMBING FIXTURES IN RESTROOM, EXISTING TO REMAIN. REPAIR/REPLACE ALL ACCESSORIES AS REQUIRED FOR A COMPLETE AND OPERATIONAL PLUMBING FIXTURE. IF REQUIRED, COORDINATE REPLACEMENT OF PLUMBING FIXTURE WITH TENANT AND ARCHITECT. VERIFY IN FIELD, PRIOR TO BID.

PLUMBING FIXTURE SCHEDULE

DESIGNATION	FIXTURE TYPE	MANUFACTURER	MODEL	TRIM NUMBER/ KIT	MOUNTING	PIPE SIZES					NOTES:
						TRAP	WASTE	VENT	CW	HW	
P3	DRINKING FOUNTAIN	ELKAY	EDFP19C (QTY.= 2)	–	WALL	2"	2"	2"	1/2"	–	2 REQD. REFER TO SHEET A2.0 FOR MOUNTING HEIGHTS. PROVIDE ACCESSIBILITY APRON AT HIGH UNIT, CLEAR APPROACH AT LOW UNIT
P4	MOP BASIN	FIAT	MSB-2424	FIAT 830-AA	FLOOR	3"	3"	2"	3/4"	3/4"	PROVIDE MOP HANGER #889-CC, VINYL RIM GUARD #E-77-AA, AND HOSE.
WCO	WALL CLEANOUT	JR SMITH	4400 SERIES	–	WALL	–	FULL SIZE	–	–	–	THREADED CLEANOUT WITH FERRULE AND ROUND ACCESS COVER.

ELECTRIC WATER HEATER SCHEDULE

DESIGNATION	MANUFACTURER	MODEL	CAPACITY (GAL.)	STAGES	GPH @ 90° RISE	KW	VOLTAGE/ PH/HZ	NOTES
EWH-1	A.O. Smith	EJC-6	6	1	8	1.5	120/1/60	1-3

NOTES:
1. PROVIDE DRIP PAN PER CODE
2. WATER HEATER AS SCHEDULED, OR ALTERNATE AS APPROVED BY BROWN SHOE CONSTRUCTION MANAGER.
3. PROVIDE WITH T&P RELIEF VALVE, VACUUM BREAKER, EXPANSION TANK AND ALL ACCESSORIES REQUIRED FOR A COMPLETE, CODE COMPLIANT, AND OPERATIONAL WATER HEATING SYSTEM.

Water meter tie-in by Waypoint Systems - see contact information on cover sheet.

PLUMBING SYMBOL LEGEND

EQUIPMENT TAG	EXPANSION TANK
KEYNOTE	FLOOR DRAIN
FIXTURE TAG	FLOOR SINK WITH HALF GRATE
BALL VALVE	FLOOR SINK WITH FULL GRATE
CHECK VALVE	WATER METER
GATE VALVE	PIPE SIZE TAG
DRAIN VALVE	PIPE BREAK
BUTTERFLY VALVE	PIPE CAP
TEMPERATURE & PRESSURE RELIEF VALVE	PIPE DOWN
PRESSURE REGULATING/ REDUCING VALVE	PIPE UP
TRAP PRIMING VALVE	PIPE TEE DOWN
THERMOSTATIC/ PRESSURE MIXING VALVE	PIPE UNION
VACUUM RELIEF VALVE	AIR CHAMBER
THERMOMETER	WATER HAMMER ARRESTER
CONNECTION TO EXISTING	PIPE ANCHOR

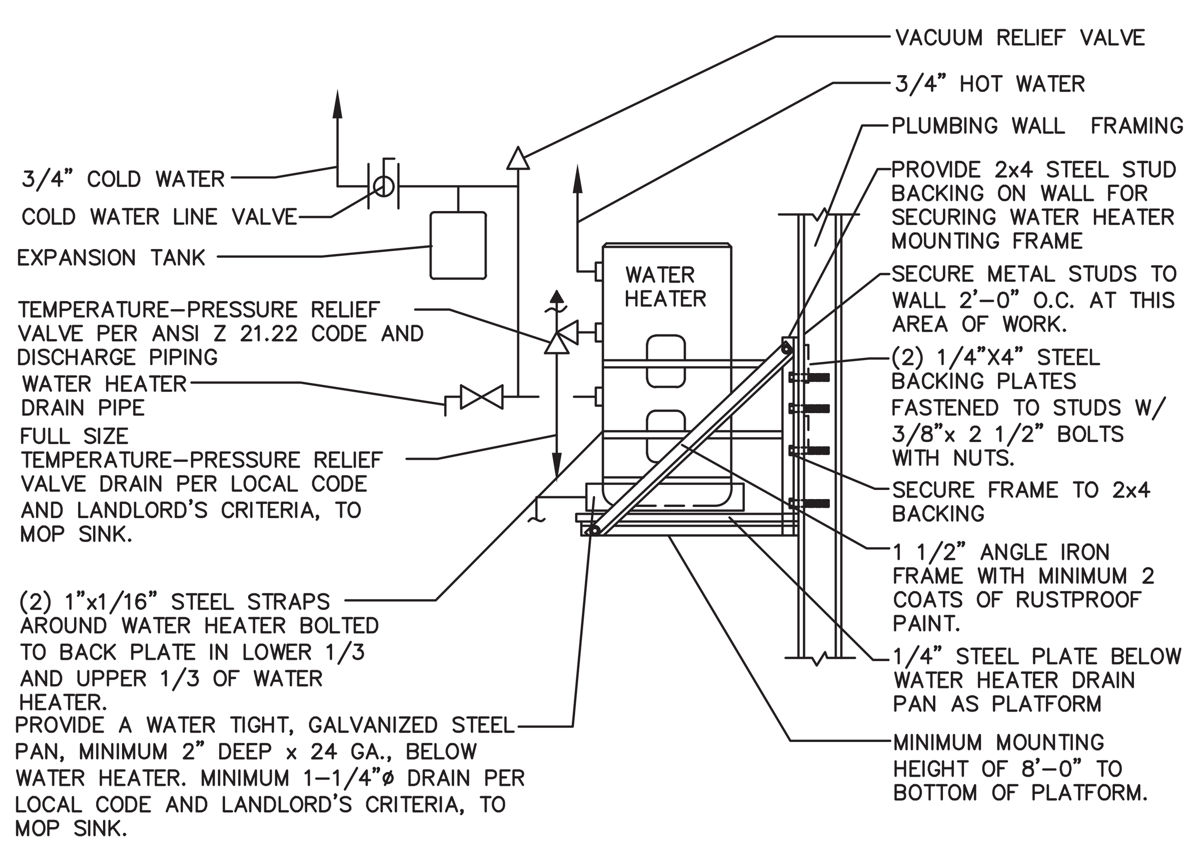

4 P1.0 WATER HEATER DETAIL
SCALE: NOT TO SCALE

GENERAL MEP NOTES

1. CONTRACTOR TO COMPLY WITH BUILDING / LANDLORD CRITERIA, DESIGN CRITERIA, STANDARD PRACTICES AND LOCAL CODE / ORDINANCE REQUIREMENTS WHEN COMMENCING WORK. THESE REQUIREMENTS SHALL SUPERSEDE ANY AND ALL INFORMATION ON THE DRAWINGS UNLESS AGREEMENT TO THE CONTRARY DURING THE BID PROCESS WHEREAS THE CLIENT WILL BE EXCLUDED FROM INCURRING ANY ADDITIONAL COSTS. THE GENERAL CONTRACTOR SHALL OVERSEE THE EXECUTION AND COMPLETION OF THESE ITEMS ALSO AT NO ADDITIONAL COST TO THE CLIENT. ANY DISCREPANCIES OR INCONSISTENCIES CONCERNING THESE REQUIREMENTS AFTER THE PROJECT IS AWARDED SHALL BE BROUGHT TO THE ATTENTION OF THE BUILDING OWNER AND TENANT FOR APPROVAL PRIOR TO COMMENCING WORK. ANY UPGRADES TO THE DESIGN / SCOPE OF WORK TO CONFORM TO THE PRECEDING REQUIREMENTS AT THIS JUNCTURE WILL THEN BE AT THE TENANT5/16S EXPENSE.
2. SINCE CODES VARY ACROSS REGIONS, IT IS THE GENERAL AND SUBCONTRACTOR'S RESPONSIBILITY TO REVIEW THE CONSTRUCTION DRAWINGS DURING BIDDING AND INCLUDE IN THEIR BID ANY ALTERNATE CODE RELATED RECOMMENDATIONS / DETAILS OR SPECIFICATIONS. IF THERE ARE ANY PROPOSED ALTERATION EQUIPMENT / INSTALLATION CHANGES, THEN THE COSTS FOR THESE CHANGES ARE TO BE EQUAL TO OR GREATER IN VALUE TO THE ITEMS AND QUANTITIES MENTIONED IN THE ORIGINAL CONSTRUCTION DRAWINGS AND THE CHANGES SHALL BE SUBMITTED TO THE ARCHITECT / ENGINEER FOR REVIEW AND APPROVAL. CONTRACTORS WHO DO NOT ADHERE TO THIS REQUIREMENT WILL BE RESPONSIBLE FOR INCURRING THE ADDED COSTS REQUIRED FOR THE DESIGN TO COMPLY WITH LOCAL CODE.

LINETYPE LEGEND

- DOMESTIC COLD WATER
- DOMESTIC HOT WATER
- DOMESTIC HOT WATER (TEMPERED)
- SANITARY SEWER (BELOW FLOOR/GRADE)
- VENT

BROWN SHOE COMPANY, INC.
8300 Maryland Ave.
Clayton, MO 63105
314/854-4000
BROWN SHOE COMPANY

DATE	DESCRIPTION
09/15/2014	BID & PERMIT
09/27/2014	2 LANDLORD COMMENTS

d p c e
don penn ■ consulting engineer
635 Westport Parkway
Suite 300
Grapevine, Texas 76051
Phone: 817-410-2858
Fax: 817-251-8411

PROHIBITION ON REUSE:
INFORMATION CONTAINED IN THESE DRAWINGS AND SPECIFICATIONS WAS PREPARED FOR USE ON THE SPECIFIC SITE INDICATED. USE OF THIS INFORMATION ON ANOTHER PROJECT IS PROHIBITED AND CONTRARY TO LAW UNLESS EXPRESSLY AUTHORIZED IN WRITING BY THE AUTHOR.

THESE DRAWINGS AND SPECIFICATIONS ARE AND SHALL REMAIN THE PROPERTY OF THE BROWN SHOE, INC. DISPLAY, REPRODUCTION, OR USE FOR ANY BUT THE SPECIFICALLY AGREED UPON PURPOSES, WITHOUT THE WRITTEN AUTHORIZATION OF BROWN SHOE, INC. IS STRICTLY PROHIBITED.

COPYRIGHT NOTICE:
THESE DRAWINGS AND SPECIFICATIONS ARE SUBJECT TO COPYRIGHT PROTECTION AS AN "ARCHITECTURAL WORK" UNDER SEC. 102 OF THE COPYRIGHT ACT, 17 U.S.C. AS AMENDED DECEMBER 1990; KNOWN AS THE ARCHITECTURAL WORKS COPYRIGHT PROTECTION ACT OF 1990. THE PROTECTION INCLUDES, WITHOUT LIMITATION, THE OVERALL FORM, ARRANGEMENT, AND COMPOSITION OF SPACES AND ELEMENTS OF THE DESIGN.

FAMOUS footwear
STORE #3406
NORTH POINT MALL
1000 NORTH POINT CIR SUITE 2208
ALPHARETTA, GA 30022

DESIGNED BY:	DP
DRAWN BY:	MJ
CHECKED BY:	DP
DATE:	09/27/14
PROTO. VER.:	010413
PROJECT NO:	140341

PLUMBING PLAN

P1.0

COPYRIGHT ©2014 BY BROWN SHOE, INC. PROTOTYPE VERSION: 010413

SECTION 01 00 00GENERAL CONDITIONS

A. THE SCOPE OF WORK IS BASED ON THE CONSTRUCTION DOCUMENTS AND SHALL INCLUDE THE FURNISHING OF MATERIALS AND LABOR REQUIRED FOR THE COMPLETE PROJECT. COMPLY WITH THE BROWN SHOE CRITERIA DESCRIBED IN THE DRAWINGS.

B. VISIT THE JOB SITE PRIOR TO SUBMITTING BID. CONTRACTOR SHALL WALK THROUGH THE SITE WITH AN AUTHORIZED REPRESENTATIVE OF THE SHOPPING CENTER AND REVIEW SHOPPING CENTER CONSTRUCTION REQUIREMENTS. COORDINATE WORK WITH THE SHOPPING CENTER WITH REGARD TO TEMPORARY UTILITIES, ALLOWABLE MATERIAL, TRAFFIC ROUTES, STORAGE OF TOOLS AND MATERIALS, USE OF TOILET FACILITIES, HOURS IN WHICH WORK IS ALLOWED, NOISE AND DUST CONTROL, CLEANUP AND OTHER MATTERS REQUIRING ADHERENCE TO SHOPPING CENTER REQUIREMENTS.

C. REVIEW WITH THE LANDLORD'S REPRESENTATIVE THE MANNER IN WHICH ALL CONNECTIONS TO STRUCTURE WILL BE MADE. NEW PENETRATIONS IN THE BUILDING ENVELOPE OR STRUCTURE SHALL BE REVIEWED WITH THE LANDLORD AND APPROVED IN WRITING. IF THE LANDLORD REQUIRES THAT PORTIONS OF WORK BE PERFORMED BY ITS OWN CONTRACTOR, INCLUDE COSTS ASSOCIATED WITH THAT PORTION OF THE WORK IN BID UNLESS STATED OTHERWISE IN WRITING BY TENANT.

D. DURING PERFORMANCE OF WORK, BE RESPONSIBLE FOR PROVISION AND MAINTENANCE OF WARNING SIGNS, LIGHT SIGNAL DEVICES, GUARD LIGHTS, BARRICADES, GUARD RAILS, FENCES AND OTHER DEVICES, APPROPRIATELY LOCATED ON AND AROUND THE JOB SITE WHICH GIVE PROPER AND UNDERSTANDABLE WARNING TO PERSONS WITH REGARD TO HAZARDOUS CONDITIONS, EQUIPMENT AND OPERATIONS BEING PERFORMED IN CONJUNCTION WITH THE WORK.

E. EXISTING CONDITIONS AND DIMENSIONS MAY BE TAKEN FROM INFORMATION FURNISHED BY THE LANDLORD. VERIFY LEASE SPACE DIMENSIONS AND IDENTIFY DISCREPANCIES BETWEEN BUILDING ELEMENTS AND DRAWINGS BEFORE COMMENCING CONSTRUCTION. DISCREPANCIES FOUND ON THE DRAWINGS SHALL BE BROUGHT TO THE ATTENTION OF BROWN SHOE'S CONSTRUCTION MANAGER NO LATER THAN (5) WORKING DAYS PRIOR TO THE BID DATE. DISCREPANCIES IDENTIFIED DURING BIDDING WILL BE CLARIFIED BY ADDENDUM.

F. DISCREPANCIES IDENTIFIED DURING CONSTRUCTION SHALL BE IMMEDIATELY BROUGHT TO THE ATTENTION OF BROWN SHOE'S CONSTRUCTION MANAGER. DISCREPANCIES IDENTIFIED DURING CONSTRUCTION WILL BE CLARIFIED BY CHANGE ORDERS. CHANGE ORDER APPROVAL IS SUBJECT TO AUTHORIZATION BY BROWN SHOE'S CONSTRUCTION MANAGER.

G. G.C. SHALL BE RESPONSIBLE FOR COSTS INCURRED FOR NONCOMPLIANCE WITH THESE CONTRACT DOCUMENTS. CONTRACTOR WILL NOT BE ALLOWED CHANGE ORDERS FOR PROBLEMS ARISING FROM NEGLECT OF PROVISIONS INCLUDED IN THESE CONDITIONS.

H. ACCOMPLISH THE WORK IN COMPLIANCE WITH THE RESTRICTIONS AND REQUIREMENTS OF THE LANDLORD. WORK SHALL CONFORM WITH THE AMERICANS WITH DISABILITIES ACT AND APPLICABLE LOCAL AND STATE HANDICAPPED DISABILITY DESIGN REQUIREMENTS. VERIFY THAT THE WORK COMPLIES WITH ALL APPLICABLE LOCAL AND STATE FIRE, SAFETY, HEALTH, ENERGY AND BUILDING CODE REQUIREMENTS.

I. REMOVE CONSTRUCTION RUBBISH, SCAFFOLDING, EQUIPMENT, TEMPORARY PROTECTION, TEMPORARY FIELD STRUCTURES, AND OTHER MATERIALS OR EQUIPMENT THAT WAS REQUIRED IN CONNECTION WITH THE CONSTRUCTION, BUT NOT A PERMANENT PART THEREOF.

J. SCAFFOLDING SHALL BE BUILT IN ACCORDANCE WITH REQUIREMENTS OF FEDERAL, STATE, AND LOCAL LAWS. TEMPORARY SHORING REQUIRED FOR THE REMOVAL OF EXISTING WORK FOR THE INSTALLATION OF NEW WORK SHALL BE INCLUDED IN THE CONTRACT. BE RESPONSIBLE FOR THIS WORK, CORRECT AND REPAIR DAMAGES CAUSED BY IMPROPER SUPPORT OR FAILURE OF SHORING.

K. MAINTAIN ORDERLY HOUSEKEEPING DURING CONSTRUCTION, AND UPON SUBSTANTIAL COMPLETION PERFORM FINAL CLEANUP. FINAL CLEANUP SHALL INCLUDE THE FOLLOWING: SWEEP, DAMP MOP, AND WAX RESILIENT FLOORING. DUST, DIRT, PAINT DRIPPINGS, OIL, GREASE, AND OTHER BLEMISHES SHALL BE REMOVED FROM FINISHED SURFACES, INCLUDING PIPES AND EQUIPMENT. WINDOWS, GLASS UNITS, GLASS DOORS AND MIRRORS SHALL BE WASHED. PAINT OVERRUNS AND PUTTY SMEARS SHALL BE REMOVED, AND HARDWARE SHALL BE RUBBED CLEAN WITH FLANNEL CLOTH.

L. BE RESPONSIBLE FOR JOB SITE SAFETY AND WARRANT THAT THIS INTENT SHALL BE MADE EVIDENT IN BROWN SHOE'S AGREEMENT WITH THE CONTRACTOR.

M. BE RESPONSIBLE TO THE SHOPPING CENTER FOR DAMAGES THAT OCCUR TO THE LANDLORD'S FACILITIES BEFORE, DURING, OR AFTER CONSTRUCTION PROCEDURES CAUSED BY CONTRACTOR, CONTRACTOR'S EMPLOYEES, OR SUBCONTRACTORS.

N. MANUFACTURER'S OF SPECIFIED ITEMS ARE NOTED FOR QUALITY AND DESIGN. SUBSTITUTE PRODUCTS ARE SUBJECT TO APPROVAL BY BROWN SHOE'S CONSTRUCTION MANAGER. THE CONTRACTOR IS ENCOURAGED TO SUBMIT ALTERNATE PRODUCTS FOR CONSIDERATION IN AN EFFORT TO REDUCE THE CONSTRUCTION COST OR TIME. REASONABLE REQUESTS WILL BE REVIEWED FOR COMPLIANCE WITH THE INTENT OF THE CONSTRUCTION DOCUMENTS.

O. PRODUCTS AND MATERIALS SHALL BE INSTALLED IN STRICT CONFORMANCE WITH THE MANUFACTURER'S PUBLISHED RECOMMENDATIONS. PROVIDE A COPY OF THE MANUFACTURER'S INSTALLATION RECOMMENDATIONS UPON REQUEST OF BROWN SHOE'S CONSTRUCTION MANAGER.

P. BROWN SHOE AND THE LANDLORD WILL PROVIDE INSURANCE REQUIREMENTS PRIOR TO THE BIDDING. EVIDENCE OF INSURANCE SHALL BE PROVIDED TO BROWN SHOE'S CONSTRUCTION MANAGER AT THE TIME OF BID SUBMITTAL.

Q. APPLICABLE STANDARDS OF CONSTRUCTION INDUSTRY HAVE THE SAME FORCE AND EFFECT ON PERFORMANCE OF THE WORK AS IF COPIED DIRECTLY INTO CONTRACT DOCUMENTS OR BOUND AND PUBLISHED THEREWITH. COMPLY WITH STANDARDS IN EFFECT ON THE DATE OF ISSUE OF THE CONTRACT DOCUMENTS, UNLESS OTHERWISE INDICATED.

R. UPON COMPLETION OF THE WORK, COMPILE FOR AND DELIVER TO BROWN SHOE'S CONSTRUCTION MANAGER A COMPLETE SET OF RECORD DOCUMENTS. THIS SET OF DOCUMENTS SHALL CONSIST OF RECORD SPECIFICATIONS AND RECORD DRAWINGS SHOWING THE REPORTED LOCATION OF THE WORK.

S. WARRANT MATERIALS AND WORKMANSHIP FOR A PERIOD OF (1) YEAR FROM DATE OF ACCEPTANCE BY BROWN SHOE 'S CONSTRUCTION MANAGER.

T. BROWN SHOE'S CONSTRUCTION MANAGER SHALL REVIEW SHOP DRAWING SUBMISSIONS SOLELY FOR THEIR CONFORMANCE WITH THE DESIGN INTENT AND CONFORMANCE WITH INFORMATION GIVEN IN THE CONSTRUCTION DOCUMENTS. BROWN SHOE SHALL NOT BE RESPONSIBLE FOR ASPECTS OF A SHOP DRAWING SUBMISSION THAT AFFECT OR ARE AFFECTED BY THE MEANS, METHODS, TECHNIQUES, SEQUENCES AND OPERATIONS OF THE CONSTRUCTION, SAFETY PRECAUTIONS AND PROGRAMS INCIDENTAL THERETO. CONTRACTOR SHALL REVIEW SHOP DRAWINGS WITH RESPECT TO THESE CONDITIONS BEFORE SUBMITTING THEM TO BROWN SHOE.

U. WHEN MODIFICATIONS TO EXISTING STRUCTURAL STEEL COMPONENTS OR THE ADDITION OF NEW STRUCTURAL STEEL ARE REQUIRED, AND NOT INDICATED IN THESE CONSTRUCTION DOCUMENTS IT SHALL BE THE RESPONSIBILITY OF THE G.C. TO SECURE THE SERVICES OF A STRUCTURAL ENGINEER TO OBTAIN THE NECESSARY APPROVALS.

V. THE CONTRACTOR SHALL BE RESPONSIBLE FOR BECOMING FAMILIAR WITH THE PROJECT SCHEDULE AND DEADLINES, AND FOR ADVISING BROWN SHOE'S CONSTRUCTION MANAGER OF ALL LONG LEAD ITEMS, THEIR ANTICIPATED DELIVERY DATES, AND ANY POTENTIAL IMPACT TO THE PROJECT SCHEDULE.

W. THE CONTRACTOR SHALL MAINTAIN A CURRENT AND COMPLETE SET OF LANDLORD AND BUILDING DEPARTMENT APPROVED DRAWINGS (AS APPLICABLE) ON SITE THROUGHOUT CONSTRUCTION DURATION FOR USE BY ALL TRADES. TENANT ARCHITECT TO ENSURE THAT ALL LANDLORD COMMENTS NOT INCLUDED IN THE BID PACKAGE SENT PRIOR TO LANDLORD APPROVAL ARE COMMUNICATED TO ALL SUBCONTRACTORS. ALL LANDLORD NOTES AND COMMENTS MUST APPEAR ON THE FINAL WORKING DRAWINGS IN THE FIELD. TENANT CONTRACTOR MUST MAINTAIN A LANDLORD APPROVED SET ON-SITE AT ALL TIMES.

X. DRAWINGS SHALL NOT BE SCALED. DIMENSIONS SHALL GOVERN IN ALL CASES. DIMENSIONS AT ENLARGED DETAILS TAKE PRECEDENCE OVER OTHER DIMENSIONS.

Y. NOTWITHSTANDING THE FOREGOING, TENANT'S REVIEW OF PLANS AND SPECIFICATIONS, AND TENANT'S ACCEPTANCE OF THE PREMISES, SHALL IN NO EVENT CREATE AN EXPRESSED OR IMPLIED CONFIRMATION THAT PLANS AND SPECIFICATIONS, NOR BUILD-OUT OF THE PREMISES IS IN ACCORDANCE WITH THE REQUIREMENTS OF APPLICABLE LAWS, CODES, ORDINANCES, AND REGULATIONS, INCLUDING BUT NOT LIMITED TO THE MOST CURRENT VERSION OF TITLE III OF THE AMERICANS WITH DISABILITIES ACT.

SUMMARY OF WORK

A. THE WORK OF THIS PROJECT INCLUDES CONSTRUCTION WORK SHOWN ON THE DRAWINGS AND SPECIFIED HEREIN. BUT NOT NECESSARILY LIMITED TO GENERAL CONSTRUCTION, MECHANICAL, ELECTRICAL, AND FIRE PROTECTION WORK.

B. EXECUTE THE WORK DESCRIBED IN THESE SPECIFICATIONS AND SHOWN ON THE DRAWINGS, AND OTHER WORK NECESSARY TO COMPLETE THE PROJECT, IN A THOROUGHLY SUBSTANTIAL AND WORKMANLIKE MANNER, BY PERSONS THOROUGHLY EXPERIENCED IN THEIR PARTICULAR TRADE OR CRAFT.

C. FIELD VERIFY DIMENSIONS OF EXISTING CONDITIONS, IF ANY, THAT AFFECTS THE WORK. TAKE RESPONSIBILITY FOR THE CORRECTNESS OF MEASUREMENTS AND VERIFY GRADES, LINES, LEVELS, ELEVATIONS, AND DIMENSIONS SHOWN PRIOR TO COMMENCING WORK.

D. CONSULT DRAWINGS AND PLAN WORK SO THAT THE EXCAVATED MATERIAL, DEMOLISHED MATERIAL, NEW BUILDING MATERIALS, ETC. ARE NOT PLACED WHERE THEY WILL INTERFERE WITH THE WORK OF OTHERS, OR WITH EXISTING TENANTS.

E. SHOULD IT APPEAR THAT THE WORK INTENDED TO BE DESCRIBED OR RELATED WORK ARE NOT SUFFICIENTLY DETAILED OR EXPLAINED ON THE DRAWINGS, OR IN THE SPECIFICATIONS, CONSULT THE ARCHITECT FOR NECESSARY CLARIFICATIONS, AND CONFORM TO THOSE CLARIFICATIONS INSOFAR AS THEY ARE CONSISTENT WITH THE ORIGINAL DRAWINGS AND SPECIFICATIONS. IN NO CASE SHALL WORK PROCEED IN UNCERTAINTY.

F. THOSE PERFORMING WORK AS A SUBCONTRACTOR MUST EXAMINE SUBSTRATES AND CONDITIONS UNDER WHICH THE WORK IS TO BE PERFORMED AND NOTIFY THE CONTRACTOR IN WRITING, OF CONDITIONS DETRIMENTAL TO THE PROPER AND TIMELY COMPLETION OF THE WORK. COMMENCEMENT OF WORK BY A TRADE ON A SURFACE OR CONSTRUCTION SHALL IMPLY ACCEPTANCE OF SUCH SURFACE OR CONSTRUCTION. DO NOT PROCEED WITH INSTALLATION UNTIL UNSATISFACTORY CONDITIONS HAVE BEEN CORRECTED.

G. ITEMS INDICATED AS "N.I.C." (NOT IN CONTRACT), OR "EXISTING" SHALL NOT BE INCLUDED IN THE CONTRACT, HOWEVER, CONTRACTOR WILL BE RESPONSIBLE FOR VERIFYING CONDITION OF SUCH ITEMS AND COORDINATING WORK THAT AFFECTS OR IS AFFECTED BY THESE ITEMS.

H. TENANT FURNISHED-CONTRACTOR INSTALLED PRODUCTS (MATERIALS, PRODUCTS OR EQUIPMENT)

1. CONTRACTOR SHALL BE RESPONSIBLE FOR RECEIVING, STORING, HANDLING, AND INSTALLING ITEMS PROVIDED BY BROWN SHOE. CONTRACTOR SHALL INSPECT SHIPMENTS UPON DELIVERY FOR DAMAGE AND SHALL VERIFY THAT QUANTITIES ARE ACCURATE AND IN COMPLIANCE WITH BILL OF LADING. CONTRACTOR SHALL BE RESPONSIBLE FOR FILING SHIPPING DAMAGE CLAIMS AGAINST THE CARRIER IN CASE OF RECEIPT OF DAMAGED ITEMS. CONTRACTOR SHALL BE RESPONSIBLE FOR REPAIR OR REPLACEMENT OF DAMAGED ITEMS UPON ACCEPTANCE OF DELIVERY AT PROJECT SITE. CONTRACTOR SHALL PROTECT THE ITEMS FROM DAMAGE THROUGHOUT THE CONSTRUCTION PERIOD UNTIL TURN OVER OF SPACE TO BROWN SHOE.

2. TENANT WILL FURNISH THE PRODUCTS AS DELINEATED IN THE SCHEDULE OF RESPONSIBILITIES ON SHEET A-1. THESE PRODUCTS WILL BE DELIVERED TO THE SITE WHERE THE CONTRACTOR SHALL RECEIVE, UNLOAD, STRIP AND INSTALL THEM.

I. TENANT PROVIDED PRODUCTS (MATERIALS, PRODUCTS OR EQUIPMENT)

1. TENANT WILL PROVIDE, FURNISH AND INSTALL CERTAIN ITEMS AS DELINEATED IN THE SCHEDULE OF RESPONSIBILITIES ON SHEET A-1. THE CONTRACTOR SHALL COORDINATE HIS WORK WITH WORK BEING PERFORMED BY BROWN SHOE'S VENDORS, INSTALLERS, AND SUBCONTRACTORS.

J. ALL WORK IS TO BE PERFORMED TO INDUSTRY STANDARDS BY QUALIFIED, COMPETENT TRADESPERSONS. IT IS ASSUMED THAT WORKERS WILL BE FAMILIAR WITH LOCAL, STATE, AND NATIONAL CODES AND REGULATIONS AND SHALL ADHERE TO SUCH CODES AND REGULATIONS. IN MUNCIPALITIES REQUIREING LICENSING IT IS ASSUMED THAT EACH TRADE SHALL HAVE A PROPERLY LICENSED PERSON PERFORMING THE WORK.

K. FIRE PROTECTION SYSTEM DESIGN AND MODIFICATIONS ARE TO BE BY THE FIRE PROTECTION CONTRACTOR, INCLUDING PREPARATION AND SUBMISSION OF DESIGN DRAWINGS, SECURING OF ALL NECESSARY PERMITS, AND THE RESPONSIBILITY FOR OBTAINING SYSTEM APPROVAL.

CUTTING AND PATCHING

A. REQUIREMENTS FOR STRUCTURAL WORK. DO NOT CUT AND PATCH STRUCTURAL ELEMENTS IN A MANNER THAT WOULD CHANGE THEIR LOAD-CARRYING CAPACITY OR LOAD-DEFLECTION RATIO.

B. VISUAL REQUIREMENTS: DO NOT CUT AND PATCH CONSTRUCTION EXPOSED ON THE EXTERIOR OR IN OCCUPIED SPACES IN A MANNER THAT WOULD, IN THE ARCHITECT'S OPINION, REDUCE THE BUILDING'S AESTHETIC QUALITIES. DO NOT CUT AND PATCH CONSTRUCTION IN A MANNER THAT WOULD RESULT IN VISUAL EVIDENCE OF CUTTING AND PATCHING. REMOVE CONSTRUCTION CUT AND PATCH IN A VISUALLY SATISFACTORY MANNER, AND REPLACE WITH A CONSTRUCTION VISUALLY ACCEPTABLE TO THE ARCHITECT.

C. USE MATERIALS IDENTICAL TO EXISTING MATERIALS. FOR EXPOSED SURFACES, USE MATERIALS THAT VISUALLY MATCH EXISTING ADJACENT SURFACES INSOFAR AS POSSIBLE. IF IDENTICAL MATERIALS ARE UNAVAILABLE OR CANNOT BE USED, USE MATERIALS WHOSE INSTALLED PERFORMANCE WILL EQUAL OR SURPASS THAT OF EXISTING MATERIALS.

D. PROTECT EXISTING CONSTRUCTION DURING CUTTING AND PATCHING TO PREVENT DAMAGE. PROVIDE PROTECTION FROM ADVERSE WEATHER CONDITIONS FOR PORTIONS OF THE PROJECT THAT MIGHT BE EXPOSED DURING CUTTING AND PATCHING OPERATIONS.

E. AVOID CUTTING EXISTING PIPE, CONDUIT, OR DUCTWORK SERVING THE BUILDING BUT SCHEDULED TO BE REMOVED OR RELOCATED UNTIL PROVISIONS HAVE BEEN MADE TO BYPASS THEM.

SECTION 02 00 00 - EXISTING CONDITIONS

A. CONTRACTOR IS TO VISIT THE SITE TO INSPECT THE EXISTING CONDITIONS AND TO VERIFY THE AMOUNT OF WORK THAT WILL BE NECESSARY FOR THE PROJECT TO BE COMPLETED AS SHOWN ON THE ARCHITECTURAL AND ENGINEERING DRAWINGS.

B. NOTIFY BROWN SHOE'S CONSTRUCTION MANAGER AND THE ARCHITECT IMMEDIATELY UPON ENCOUNTERING UNEXPECTED CONCEALED CONDITIONS AND, EXCEPT IN AN EMERGENCY, BEFORE THE ENCOUNTERED CONDITIONS ARE DISTURBED.

C. CONTRACTOR TO VERIFY CONDITION OF EXISTING COMPONENTS WHEN THEY ARE TO BE REUSED. THEY SHALL BE OPERATIONAL AND FREE OF AESTHETIC FLAWS AND SUITABLE FOR THEIR INTENDED USE. REFER ANY QUESTIONS TO BROWN SHOE'S CONSTRUCTION MANAGER. IF THERE IS DOUBT CONCERNING THE ACCEPTABILITY OF ANY COMPONENT, PROVIDE A COST FOR REPLACING THE QUESTIONABLE COMPONENTS.

D. CONTRACTOR IS TO VERIFY ELEVATION AND CONDITION OF EXISTING FLOOR SUBSTRATE AND REPORT TO BROWN SHOE'S CONSTRUCTION MANAGER IN WRITING IF: THERE IS A VARIATION OF 1/2" OR MORE OVER THE ENTIRE PROJECT, THE SLAB IS 1/8" PER 10 FEET OR GREATER IN ANY AREA OF THE PROJECT, OR IF ROUGH OR UNSTABLE SUBSTRATE SURFACES ARE ENCOUNTERED.

SECTION 02 41 00 - SELECTIVE DEMOLITION

A. PERFORM THE DEMOLITION WORK IN ACCORDANCE WITH ANSI/NEPA 241, SAFEGUARDING BUILDING CONSTRUCTION AND DEMOLITION OPERATIONS.

B. COMPLY WITH GOVERNING REGULATIONS PERTAINING TO ENVIRONMENTAL PROTECTION, USING WATER SPRINKLING, TEMPORARY ENCLOSURES, AND OTHER SUITABLE METHODS TO CONTROL DUST AND DIRT IN THE AIR.

C. PROMPTLY REMOVE DEBRIS FROM PREMISES. DO NOT BURN DEBRIS ON THE SITE. PROVIDE DUST-TIGHT PARTITION AREAS WHERE DEMOLITION WORK IS BEING PERFORMED. WITHIN AREAS THAT ARE FINISHED OR IN USE PROVIDE NOT LESS THAN 4" NOMINAL METAL OR WOOD STUD PARTITIONS WITH 1/2" PLYWOOD SHEATHING ONE SIDE (FINISHED ON OCCUPIED SIDE). JOINTS OF SHEATHING SHALL BE SEALED AND AIR TIGHT. PERIMETER JOINTS OF PARTITIONS SHALL BE SEALED AND DOORS WEATHERSTRIPPED. DO NOT FASTEN OR OTHERWISE SECURE PARTITIONS TO EXISTING FINISHED FLOOR, WALLS OR CEILINGS UNLESS OTHERWISE APPROVED BY THE ARCHITECT.

D. AFTER FLOOR COVERINGS ARE REMOVED, THOROUGHLY REMOVE ADHESIVES SUCH THAT WHEN COMPLETED, FLOORS ARE READY TO RECEIVE NEW FLOOR COVERINGS.

SECTION 03 00 00 - CONCRETE

A. THE CONCRETE WORK SHALL CONFORM WITH ALL ACI STANDARDS EXCEPT WHEN IN CONFLICT WITH THE BUILDING CODE IN FORCE. IN SUCH AN EVENT THE BUILDING CODE SHALL GOVERN. USE THE LATEST VERSION AVAILABLE FOR EACH OF THE REFERENCED STANDARDS.

B. CONCRETE MATERIALS

1. PORTLAND CEMENT: ASTM C150, TYPE 1 NORMAL PORTLAND CEMENT. AGGREGATES: ASTM C33.

2. WATER: CLEAN, FREE FROM SUBSTANCES THAT WOULD COMPROMISE THE INTEGRITY OF THE CONCRETE MIXTURE.

3. ADMIXTURES: CONCRETE ADMIXTURES SHALL COMPLY WITH ASTM C494 (WATER REDUCING) OR ASTM C260 (AIR ENTRAINING), PRODUCED BY RECOGNIZED MANUFACTURERS, SUBJECT TO ARCHITECT'S APPROVAL.

C. OTHER MATERIALS

1. WELDED WIRE FABRIC: ASTM A185, FLAT SHEETS.

2. BONDING AGENT: (EPOXY TYPE), 100 PERCENT SOLIDS, "EPOBOND" (L & M CONSTRUCTION CHEMICALS CO.).

3. MOISTURE-RETAINING COVER: ONE OF THE FOLLOWING, COMPLYING WITH ASTM C171.

a. WATERPROOF PAPER.
b. POLYETHYLENE FILM.
c. POLYETHYLENE-COATED BURLAP.

4. LIQUID MEMBRANE CURING AND SEALING COMPOUND: ASTM C309-07, TYPE 1, CLASS B, WATER-BASED ACRYLIC COMPOUND, "DRESS AND SEAL WB" (L & M CONSTRUCTION CHEMICALS CO.).

D. MIXING

1. READY MIXED CONCRETE SHALL CONFORM WITH ASTM C94-96.

2. SLUMP SHALL BE 2-1/2" BUT NOT MORE THAN 3-1/2" IN FIELD DETERMINED IN ACCORDANCE WITH ASTM C143-90A.

E. PLACING, FINISHING, CURING, AND SEALING

1. AFTER DEMOLITION AND TRENCHING HAS BEEN PERFORMED, AND SUB GRADE AND MOISTURE BARRIER REESTABLISHED, APPLY BONDING AGENT TO EXISTING CONCRETE SURFACES, INSTALL WIRE MESH IF APPLICABLE, THEN PLACE CONCRETE IMMEDIATELY AFTER MIXING. PROPERLY SPADE AND PUDDLE BY USE OF RODS, SHOVELS AND HAND SPADES, AND AGITATE BY MEANS OF INTERNAL AND/OR EXTERNAL VIBRATORS TO OBTAIN DENSEST POSSIBLE CONCRETE WITHOUT OVER-VIBRATING TO THE POINT WHERE SEGREGATION RESULTS. DEPOSIT CONCRETE CONTINUOUSLY UNTIL COMPLETION OF EACH SECTION OR UNIT.

2. FINISH CONCRETE SLABS TO PROPER ELEVATIONS TO ENSURE THAT SURFACE MOISTURE WILL DRAIN FREELY TO FLOOR DRAINS, IF ANY, AND THAT NO PUDDLE AREAS EXIST. NEW SURFACES SHALL ALIGN WITH ADJACENT EXISTING SURFACES UNLESS OTHERWISE SHOWN.

3. PROTECT CONCRETE WORK FROM DRYING OUT BY COVERING WITH WATERPROOF PAPER, POLYETHYLENE-COATED BURLAP, POLYETHYLENE FILM, OR LIQUID MEMBRANE CURING COMPOUND. PERFORM SLAB CURING AS SOON AS POSSIBLE AFTER FINAL FINISHING OPERATIONS. MAINTAIN CURING FOR 7 DAYS MINIMUM.

SECTION 04 20 00 - UNIT MASONRY ASSEMBLIES

A. WHERE MASONRY CONSTRUCTION IS INDICATED ON DRAWINGS OR WHERE REQUIRED BY CODE TO HAVE FIRE-RESISTANT CONSTRUCTION, PROVIDE MASONRY MATERIAL AND INSTALLATION METHODS NECESSARY TO OBTAIN THE REQUIRED FIRE RATING.

B. WHEN THE OUTSIDE AIR TEMPERATURE IS BELOW 40°F, OR EXPECTED TO FALL BELOW 40°F, COMPLY WITH THE RECOMMENDED PRACTICE FOR COLD WEATHER MASONRY CONSTRUCTION SET FORTH BY THE INTERNATIONAL MASONRY INDUSTRY ALL-WEATHER COUNCIL AND BIA TECHNICAL NOTES 1, LATEST REVISION.

C. PROTECT MASONRY CONSTRUCTION FROM DIRECT EXPOSURE TO WIND AND SUN WHEN ERECTED IN AN AMBIENT AIR TEMPERATURE OF 99°F IN THE SHADE WITH A RELATIVE HUMIDITY OF LESS THAN 50 PERCENT.

D. MATERIALS

1. MASONRY INFILL SHALL MATCH EXISTING MASONRY ASSEMBLY.

2. CONCRETE BLOCK, BRICK, AND MORTAR SHALL COMPLY WITH ALL ASTM STANDARDS FOR THE APPLICATIONBEING INSTALLED.

3. TIES, ANCHORS, AND REINFORCING: GALVANIZED FOR EXTERIOR WALLS.

a. SPACE LADDER OR TRUSS TYPE JOINT REINFORCING AT 16" O.C. VERTICALLY.
b. SPACE MASONRY VENEER TIES TO SUPPORT NOT MORE THAN 2 S.F. OF WALL AREA.

E. CLEAN MASONRY ASSEMBLY AFTER MORTAR IS THOROUGHLY SET AND CURED, IN ACCORDANCE WITH MASONRY UNIT MANUFACTURER'S RECOMMENDATIONS.

SECTION 05 40 00 - COLD FORMED METAL FRAMING

A. COMPONENT DESIGN: COMPUTE STRUCTURAL PROPERTIES OF STUDS IN ACCORDANCE WITH AISI "SPECIFICATION FOR THE DESIGN OF COLD-FORMED STEEL STRUCTURAL MEMBERS".

B. DESIGN CRITERIA

1. WIND LOADS IN ACCORDANCE WITH THE GOVERNING STATE OR LOCAL BUILDING CODE.
2. DEFLECTION
a. LESS THAN L/720 FOR MASONRY EXTERIOR VENEER.
b. LESS THAN L/360 FOR EXTERIOR INSULATION AND FINISH SYSTEM

C. PROVIDE MANUFACTURER'S STANDARD STEEL RUNNERS (TRACKS), BLOCKING, LINTELS, CLIP ANGELS, SHOES, REINFORCEMENTS, FASTENERS, AND ACCESSORIES AS RECOMMENDED BY MANUFACTURER FOR APPLICATIONS INDICATED, AND AS NEEDED TO PROVIDE A COMPLETE METAL FRAMING SYSTEM.

D. INSTALL METAL FRAMING SYSTEMS IN ACCORDANCE WITH MANUFACTURER'S PRINTED INSTRUCTIONS AND RECOMMENDATIONS.

INTERIOR STUD FRAMING LIMITING HEIGHTS

STUD DESIGN	STUD WIDTH	STUD SPACING	ALLOW DEFLECTION	PATITION ONE LAYER	FURRING ONE LAYER
20 GAUGE (.0312 MIN.)					
212ST20	2 1/2"	16"	L/360	12'-0"	11'-6"
358ST20	3 5/8"	16"	L/360	15'-7"	15'-0"
400ST20	4"	16"	L/360	16'-10"	16'-3"
600ST20	6"	16"	L/360	22'-10"	23'-3"

THIS DESIGN IS BASED UPON UNIMAST CORPORATION PRODUCTS AND SPECIFICATIONS. VERIFY THAT "OR-EQUAL" MANUFACTURER'S PRODUCTS AND SPECIFICATIONS ARE EQUAL TO OR EXCEED THOSE LISTED HERE. LIMITING HEIGHT INDICATED IS FOR 5/8" THICK GYPSUM BOARD PANELS AND 5 PSF UNIFORM LOAD PERPENDICULAR TO PARTITION OR FURRING. USE ONE-LAYER HEIGHTS FOR UNBALANCED ASSEMBLIES AND FOR FURRING WITH STUD ATTACHED TO TOP AND BOTTOM RUNNERS AND FREE STANDING UP TO 12 FT. HEIGHT. STUDS EXCEEDING 12 FT. HEIGHT REQUIRE INTERMEDIATE BRACING TO BUILDING STRUCTURE. CHASE WALL PARTITIONS REQUIRE HORIZONTAL CROSS BRACES AT 4 FT. O.C. MAX. CONSULT LOCAL CODE AUTHORITY FOR LIMITING CRITERIA.

SECTION 06 10 00 - ROUGH CARPENTRY

A. LUMBER STANDARDS: COMPLY WITH DOC PS20-94, AMERICAN SOFTWOOD LUMBER STANDARD, AND WITH APPLICABLE GRADING RULES OF INSPECTION AGENCIES CERTIFIED BY ALSC'S BOARD OF REVIEW.

B. MATERIALS

1. LUMBER

a. GRADE: NO. 1 DOUGLAS FIR NO. 2 YELLOW PINE. MOISTURE CONTENT: 19 PERCENT MAXIMUM DOOR LUMBER 2" OR LESS NOMINAL THICKNESS.
b. SURFACING: SURFACE 4 SIDES (S4S).

2. PLYWOOD: SOFTWOOD PLYWOOD: DOC PS 1-83.

a. EXTERIOR GRADE PLYWOOD WHERE USED AS A BACKING MATERIAL IN EXTERIOR CONSTRUCTION: CDX.
b. INTERIOR GRADE PLYWOOD WHERE APPEARANCE IS NOT A FACTOR OR WHERE CONCEALED AS A BACKING MATERIAL, EXCEPT IN MOISTURE AREAS: C-D INT-APA.
c. IN INTERIOR AREAS WHERE MOISTURE IS PRESENT: CDX.

3. FIRE-RETARDANT TREATED WOOD

a. LUMBER: AWPA C20093
b. PLYWOOD: AWPA C27-93

4. PRESERVATIVE TREATED WOOD

a. LUMBER: AWPA C2-93
b. PLYWOOD: AWPA C9-93

C. INSTALLATION

1. FRAME WOOD MEMBERS TO A CLOSE FIT, SET ACCURATELY TO REQUIRED LINES AND LEVELS AND SECURE RIGIDLY IN PLACE, CUT AND FIT FRAMING, BLOCKING, AND SIMILAR ITEMS TO ACCOMMODATE OTHER WORK.

2. PRESSURE-TREATED WOOD PRODUCTS

a. PROVIDE PRESSURE TREATED WOOD FOR ALL FRAMING, BLOCKING, FURRING, NAILING STRIPS, BUILT INTO EXTERIOR MASONRY WALLS, WOOD IN CONTACT WITH CONCRETE AND IN CONJUNCTION WITH ROOFING.
b. PROVIDE FIRE-RETARDANT TREATED WOOD FOR CONCEALED BLOCKING AND FOR EXPOSED LUMBER AND PLYWOOD IN HABITABLE SPACE.

SECTION 07 24 00 - EXTERIOR INSULATION AND FINISH SYSTEM

A. INSTALLER: ENGAGE AN EXPERIENCED INSTALLER WHO HAS COMPLETED SYSTEMS SIMILAR IN MATERIAL, DESIGN, AND EXTENT TO THOSE INDICATED FOR THIS PROJECT, WITH A RECORD OF SUCCESSFUL INSERVICE PERFORMANCE, AND WHO IS APPROVED BY THE MANUFACTURER OF THE SYSTEM.

B. APPLICATION OF THE SYSTEM SHALL BE PER MANUFACTURER'S WRITTEN RECOMMENDATIONS FOR ALL COMPONENTS ASSOCIATED WITH THE PRODUCT(S) SPECIFIED IN THE DRAWINGS.

SECTION 07 92 00 - JOINT SEALANTS

A. MATERIALS

1. PROVIDE AND INSTALL SEALANT AS RECOMMENDED BY MANUFACTURER FOR USE WITH MATERIAL AND EXPOSURE CONDITIONS ENCOUNTERED.

B. INSTALLATION

1. INSTALL MATERIALS IN ACCORDANCE WITH THE MANUFACTURER'S PRINTED INSTRUCTION, AND TO COMPLY WITH THE RECOMMENDATIONS OF ASTM C1193-91, LATEST EDITION, FOR USE OF JOINT SEALANTS AS APPLICABLE TO MATERIALS, APPLICATIONS, AND CONDITIONS INDICATED.

2. LOCATIONS

a. USE POLYURETHANE SEALANT AT THE PERIMETER OF WINDOW FRAMES, DOOR FRAMES AND THRESHOLDS, MISCELLANEOUS FRAMES, CONDITIONS WHERE SEALANT IS IN CONTACT WITH THE EXTERIOR INSULATION AND FINISH SYSTEMS, FOR WALL CONSTRUCTION, SILL PLATES, CONTROL AND EXPANSION JOINTS.
b. USE SILICONE SEALANT MOLD AND MILDEW RESISTANT TYPE FOR USE AROUND PLUMBING FIXTURES AND AT JOINTS BETWEEN BACKSPLASHES AND WALLS.
c. USE ACRYLIC LATEX CAULK FOR INTERIOR APPLICATIONS ONLY, EXCEPT FOR THE FOLLOWING APPLICATIONS:

1. WHERE JOINT MOVEMENT IS EXPECTED IN EXCESS OF THE MATERIALS SPECIFIED CAPABILITIES.

2. WHERE A SEALANT IS OTHERWISE SHOWN OR SPECIFIED ABOVE FOR USE.

SECTION 08 11 00 - STEEL DOORS AND FRAMES

A. COMPLY WITH AMERICAN NATIONAL STANDARDS INSTITUTE (ANSI) FOR DOOR AND FRAME PREPARATION, PHYSICAL ENDURANCE CRITERIA, AND SPECIFICATIONS.

B. FABRICATION

1. UNLESS OTHERWISE SHOWN, FABRICATE INTERIOR FRAMES OF 16 GAUGE STEEL AND EXTERIOR FRAMES OF 14 GAUGE GALVANIZED STEEL. FULLY WELD FRAMES WITH CORNERS MITERED AND GROUND SMOOTH, UNLESS KNOCKDOWN FRAMES ARE SPECIFIED.

2. FABRICATE FLUSH HOLLOW METAL DOORS WITH FACE SHEETS EACH FORMED OF 18 GAUGE STEEL FOR INTERIOR DOORS AND 16 GAUGE GALVANIZED STEEL FOR EXTERIOR DOORS.

a. INSULATE EXTERIOR NONFIRE-RATED HOLLOW METAL DOORS WITH POLYSTYRENE OR POLYURETHANE AT DOOR MANUFACTURER'S OPTION, INSERTED BETWEEN VERTICAL REINFORCING.

3. FABRICATE FIRE-RATED DOORS AND FRAMES IN ACCORDANCE WITH THE REQUIREMENTS OF NFPA STANDARD NO.8 AND UL STANDARD FOR SAFETY NO. 63 FOR THE CLASS OF DOOR OPENING SCHEDULED.

a. DOORS AND FRAMES SHALL BEAR THE APPROPRIATE UNDERWRITERS LABORATORIES LABELS, STATING REQUIRED FIRE-PROTECTION RATING AND MAXIMUM TEMPERATURE RISE RATING, IF ANY.

C. INSTALLATION

1. SET FRAMES ACCURATELY IN POSITION, PLUMBED, ALIGNED, AND BRACED SECURELY UNTIL PERMANENT ANCHORS ARE SET. FIT HOLLOW METAL DOORS ACCURATELY IN FRAMES, WITHIN CLEARANCES

D. EXISTING DOORS AND FRAMES: EXAMINE EXISTING DOORS AND FRAMES WHICH ARE TO REMAIN, OR ARE TO BE REMOVED AND RELOCATED, TO DETERMINE THAT DOORS SWING FREELY, ARE PROPERLY ALIGNED WITHIN FRAME, AND WILL ACCEPT NEW HARDWARE AS SPECIFIED. NOTIFY BROWN SHOE'S CONSTRUCTION MANAGER IN WRITING OF DOORS AND FRAMES THAT DO NOT MEET THESE REQUIREMENTS.

SECTION 08 31 00 - ACCESS DOORS

A. USE SIZE 24" X 24" MINIMUM IF NO ACTUAL SIZE IS INDICATED - WEATHERPROOF DOOR. HINGES SHALL BE CONCEALED, SPRING TYPE, OPENING TO 175°. LOCKS SHALL BE FLUSHED, SCREW DRIVER OPERATED, WITH METAL CAM. PROVIDE RATED DOOR AND HARDWARE WHERE REQUIRED. ANY CHANGE ORDERS RESULTING FROM NOT INSTALLING THIS DOOR WILL BE CHARGED TO THE G.C.

SECTION 08 33 00 - ROLLING GRILLE

A. CORNELL VISIONAIRE ROLLING GRILLE, MODEL ESG10, WITH MILL FINISH RODS, CLEAR ANNODIZED BOTTOM BAR AND GUIDES, AND PUSH-UP OPERATION WITH EZ LIFT OPTION. INCLUDE CENTER BOTTOM BAR LOCK WITH THUMBTURN/ PROTECTION PANEL AND 3"X3"X20' STEEL SUPPORT TUBE.

B. GRILLE SUPPLIED AND INSTALLED THROUGH NATIONAL ACCOUNTS AGREEMENT. REFER TO VENDOR CONTACTS ON SHEET A1 FOR THE PROPER CONTACT FOR NATIONAL ACCOUNT PRICING.

SECTION 08 41 00 - INTERIOR STOREFRONT SYSTEM

A. STOREFRONT SYSTEM

1. COMPONENTS AND FINISHES AS INDICATED ON DRAWINGS.

B. INSTALLATION

1. GENERAL: COMPLY WITH MANUFACTURER'S INSTRUCTIONS AND RECOMMENDATIONS FOR INSTALLATION OF ALUMINUM FRAMING SYSTEMS.

2. SET UNITS PLUMB, LEVEL, AND TRUE TO LINE, WITHOUT WARP AND RACK OF FRAMING MEMBERS. ANCHOR SECURELY IN PLACE, SEPARATING ALUMINUM AND OTHER CORRODIBLE METAL SURFACES OF CORROSION DUE TO ELECTROLYTIC ACTION AT POINTS OF CONTACT WITH OTHER MATERIALS.

3. COMPLY WITH MANUFACTURER'S RECOMMENDATION AND SECTION 08800 FOR GLASS AND GLAZING WORK.

SECTION 08 71 00 - DOOR HARDWARE

A. COMPLY WITH:

1. AMERICAN NATIONAL STANDARDS INSTITUTE (ANSI) REQUIREMENTS, USE LATEST EDITION OF STANDARD AVAILABLE.

2. HARDWARE SUPPLIER SHALL BE RESPONSIBLE FOR THOROUGHLY DETAILING THE PROJECT TO ENSURE THAT THE ITEMS SPECIFIED WILL PROPERLY FUNCTION IN THE INDICATED LOCATIONS.

3. ACCESSORIES AND ATTACHMENTS

a. FURNISH HARDWARE WITH SCREWS, THROUGH BOLTS AND OTHER FASTENINGS SUITABLE TO ASSURE PERMANENT ANCHORAGE. WHERE EXPOSED, FASTENINGS SHALL BE COUNTERSUNK OVAL-HEAD TYPE, (EXCEPT USE FLATHEAD FOR HINGES), AND SHALL MATCH FINISH OF HARDWARE BEING ATTACHED. PROVIDE CONCEALED FASTENINGS WHEREVER POSSIBLE. HARDWARE SHALL NOT BE ATTACHED WITH SELF-TAPPING SCREWS AND SHEET METAL SCREWS. DOOR CLOSERS, CLOSER ARMS, DOOR HOLDERS, HOLDER ARMS AND DOOR STOPS SHALL BE SECURED TO DOORS AND FRAMES WITH FASTENERS SUPPLIED BY THE MANUFACTURER. FLOOR TYPE STOPS AND HOLDERS SHALL BE FASTENED TO THE FLOOR WITH MACHINE SCREWS INTO EXPANSION SHIELDS. ALL HARDWARE SHOULD BE ADJUSTED TO MEET CODE REQUIREMENTS, INCLUDING OPENING FORCES, RELEASE ACTIVATION FORCES, ETC.

B. INSTALLATION

1. INSTALL EACH HARDWARE ITEM IN COMPLIANCE WITH THE MANUFACTURER'S PRINTED INSTRUCTION AND RECOMMENDATIONS AT MOUNTING HEIGHTS CONFORMING TO THE RECOMMENDED MOUNTING LOCATIONS OF THE BUILDERS' HARDWARE MANUFACTURERS ASSOCIATION, AND THE AMERICAN'S WITH DISABILITIES ACT. WHEREVER CUTTING AND FITTING IS REQUIRED TO INSTALL HARDWARE ONTO AND INTO SURFACES WHICH ARE LATER TO BE PAINTED OR FINISHED IN ANOTHER WAY, INSTALL EACH ITEM COMPLETELY AND THEN REMOVE AND STORE IN A SECURE PLACE DURING THE FINISH APPLICATION. AFTER COMPLETION OF THE FINISHES, REINSTALL EACH ITEM. DO NOT INSTALL SURFACE-MOUNTED ITEMS UNTIL FINISHES HAVE BEEN COMPLETED ON THE SUBSTRATE.

2. MORTISE AND CUT TO CLOSE TOLERANCE AND CONCEAL EVIDENCE OF CUTTING IN THE FINISHED WORK.

COPYRIGHT © 2014 BY BROWN SHOE, INC. PROTOTYPE VERSION: 010413

BROWN SHOE COMPANY, INC.
8300 Maryland Ave.
Clayton, MO 63105
314/854-4000
BROWN SHOE COMPANY

09/15/2014 BID & PERMIT
09/26/2014 2 LANDLORD COMMENTS

TRICARICO®
Tricarico Architecture and Design PC
502 Valley Road Wayne, NJ 07470
T (973) 692-0222 F (973) 692-0223
www.tricarico.com

PROHIBITION ON REUSE: INFORMATION CONTAINED IN THESE DRAWINGS AND SPECIFICATIONS WAS PREPARED FOR USE ON THE SPECIFIC SITE INDICATED. USE OF THIS INFORMATION ON ANOTHER PROJECT IS PROHIBITED AND CONTRARY TO LAW UNLESS EXPRESSLY AUTHORIZED IN WRITING BY THE AUTHOR.
THESE DRAWINGS AND SPECIFICATIONS ARE AND SHALL REMAIN THE PROPERTY OF THE BROWN SHOE, INC. DISPLAY, REPRODUCTION, OR USE FOR ANY BUT THE SPECIFICALLY AGREED UPON PURPOSES, WITHOUT THE WRITTEN AUTHORIZATION OF BROWN SHOE, INC. IS STRICTLY PROHIBITED.
COPYRIGHT NOTICE: THESE DRAWINGS AND SPECIFICATIONS ARE SUBJECT TO COPYRIGHT PROTECTION AS AN "ARCHITECTURAL WORK" UNDER SEC. 102 OF THE COPYRIGHT ACT, 17 U.S.C. AS AMENDED DECEMBER 1990; KNOWN AS THE ARCHITECTURAL WORKS COPYRIGHT PROTECTION ACT OF 1990. THE PROTECTION INCLUDES, WITHOUT LIMITATION, THE OVERALL FORM, ARRANGEMENT, AND COMPOSITION OF SPACES AND ELEMENTS OF THE DESIGN.

FAMOUS footwear
STORE #3406
NORTH POINT MALL
1000 NORTH POINT CIR SUITE 2208
ALPHARETTA, GA 30022

DESIGNED BY: BF
DRAWN BY:
CHECKED BY:
DATE: 09/26/14
PROTO. VER.: 010413
PROJECT NO: 140341

SPECIFICATIONS

SP-1

3. DRILL AND COUNTERSINK UNITS THAT ARE NOT FACTORY – PREPARED FOR ANCHORAGE FASTENERS. SPACE FASTENERS AND ANCHORS IN ACCORDANCE WITH INDUSTRY STANDARDS.

4. AT FINAL COMPLETION, ADJUST AND CHECK EACH OPERATING ITEM OF HARDWARE AND EACH DOOR TO ENSURE PROPER OPERATION AND FUNCTION OF EVERY UNIT. LUBRICATE MOVING PARTS WITH THE TYPE LUBRICATION RECOMMENDED BY MANUFACTURER (GRAPHITE TYPE IF NOT SPECIFICALLY RECOMMENDED).

5. REPLACE UNITS WHICH CANNOT BE ADJUSTED AND LUBRICATED TO OPERATE FREELY AND SMOOTHLY AS INTENDED FOR THE APPLICATION MADE, WITH NEW HARDWARE.

SECTION 08 80 00 - GLAZING & MIRRORS

A. GLASS DESIGN: GLASS THICKNESS INDICATED ARE MINIMUMS AND ARE FOR DETAILING ONLY. CONFIRM GLASS THICKNESS BY ANALYZING PROJECT LOADS AND IN-SERVICE CONDITIONS. PROVIDE GLASS LIGHTS FOR VARIOUS SIZE OPENINGS IN NORMAL THICKNESS INDICATED, BUT NOT LESS IN THICKNESS AND IN STRENGTH REQUIRED TO MEET OR EXCEED ASTM STANDARDS.

B. COMPLY WITH:

1. GLASS ASSOCIATION OF NORTH AMERICA (GANA/FORMERLY) THE FLAT GLASS MARKETING ASSOCIATION, "GLAZING MANUAL". SEALED INSULATING GLASS MANUFACTURER'S ASSOCIATION (SIGMA), TM-300, "VERTICAL GLAZING GUIDELINES". AMERICAN NATIONAL STANDARD INSTITUTE (ANSI) Z97.1, "SAFETY GLAZING MATERIALS USED IN BUILDINGS – SAFETY PERFORMANCE SPECIFICATIONS AND METHODS OF TEST".

2. MATERIALS AND INSTALLATION SHALL MEET ASTM STANDARDS FOR APPLICATIONS LISTED IN THE DRAWINGS.

C. MIRRORS

1. CONFORM TO FED. SPEC. DD-Q-451D(1), 1/4" POLISHED PLATE GLASS MIRROR ELECTROLYTICALLY COPPER PLATED BACK, GUARANTEED AGAINST SILVER BACKING FAILURE FOR MINIMUM OF TEN YEARS.

SECTION 09 29 00 - GYPSUM WALLBOARD

A. CODES AND STANDARDS

1. GYPSUM ASSOCIATION (GA) "RECOMMENDED SPECIFICATION FOR THE APPLICATION AND FINISHING OF GYPSUM WALLBOARD," GA-216, UNLESS OTHERWISE SPECIFIED HEREIN GYPSUM ASSOCIATION (GA) "RECOMMENDED SPECIFICATION: LEVELS OF GYPSUM BOARD FINISH" GA-214 JOINTLY PUBLISHED BY AWCI, CISCA, AND PDCA.

2. ASTM C645, "STANDARD SPECIFICATION FOR NON-LOADBEARING (AXIAL) STEEL STUDS, RUNNERS (TRACK), AND RIGID FURRING CHANNELS FOR SCREW APPLICATION OF GYPSUM BOARD".

3. ASTM C754 "STANDARD SPECIFICATION FOR INSTALLATION OF STEEL FRAMING MEMBERS TO RECEIVE SCREW ATTACHED GYPSUM". COLD-FORMED METAL FRAMING AND RELATED WORK SHALL BE DESIGNED OF COLD-FORMED STEEL STRUCTURAL MEMBERS.

B. MATERIALS

1. CONFORMING TO ASTM STANDARDS, AND DELIVERED TO THE JOB SITE WITH END TAPERS BEARING UNDERWRITERS LABORATORIES LABEL, WITH THE CORRECT DESIGN NUMBER FOR THESE DRAWINGS AND SPECIFICATION UNLESS SHOWN DIFFERENTLY ON PLANS.

2. INSTALLATION MATERIALS INCLUDING ACCESSORIES, FASTENERS, SUBSTRATE, ETC. SHALL ALL MEET THE MINIMUM REQUIREMENTS OF ASTM AND UL STANDARDS FOR THE GIVEN APPLICATION.

C. INSTALLATION

1. INSTALL WATER-RESISTANT GYPSUM WALLBOARD IN HIGH-MOISTURE AREAS SUCH AS TOILET ROOMS.

2. GYPSUM WALL BOARD INSTALLED PER ASTM AND UL REQUIREMENTS.

SECTION 09 30 00 - TILE

A. COMPLY WITH:

1. TILE COUNCIL OF AMERICA, INC. (TCA), HANDBOOK FOR CERAMIC TILE INSTALLATION AND AMERICAN NATIONAL STANDARDS INSTITUTE SPECIFICATIONS (ANSI). USE THE LATEST EDITIONS AVAILABLE.

B. INSTALLATION MATERIALS

1. SETTING AND GROUTING MATERIALS

a. THIN SET, LATEX-MODIFIED DRY SET PORTLAND CEMENT MORTAR
b. ORGANIC ADHESIVE
c. LATEX-MODIFIED DRY SET PORTLAND CEMENT GROUT.

1. COLOR: REFER TO DRAWINGS.

2. CEMENTITIOUS BACKER UNITS: 1/2" THICK PORTLAND CEMENT SURFACED, FIBER GLASS MESH REINFORCED PANEL, COMPLYING WITH ANSI A118.9, "DUROCK CEMENT BOARD" (UNITED STATES GYPSUM CO.); OR APPROVED SUBSTITUTION.

SECTION 09 51 00 - ACOUSTICAL CEILINGS

A. MATERIAL SELECTIONS: REFER TO DRAWINGS.

1. EXPOSED SUSPENSION SYSTEM: REFER TO DRAWINGS.

a. HOLD-DOWN CLIPS: FOR LAY-IN CEILING UNITS IN VESTIBULES AND PUBLIC TOILET ROOMS, AND FOR UNITS WITHIN VESTIBULES.

b. HANGERS: SOFT STEEL WIRE, 12 GAUGE, GALVANIZED.

B. INSTALL SUSPENSION SYSTEMS TO COMPLY WITH ASTM STANDARDS.

1. LEVEL CEILING SYSTEM TO TOLERANCE OF 1/8".

2. SUPPORT CEILING SYSTEM ONLY FROM BUILDING STRUCTURAL MEMBERS IN A MANNER APPROVED BY THE LANDLORDS REPRESENTATIVE AND THE BUILDING DEPARTMENT.

3. EXTEND EXISTING GRID SYSTEM WHICH IS TO REMAIN, USING SALVAGED GRID WHERE POSSIBLE AND NEW GRID WHERE NECESSARY TO COMPLETE CEILINGS. DO NOT REUSE DAMAGED GRID. ALL EXISTING COMPONENTS MUST BE IN LIKE-NEW CONDITION TO BE CONSIDERED FOR REUSE.

C. INSTALL ACOUSTICAL CEILING TILES IN COORDINATION WITH SUSPENSION SYSTEM, W/ EDGES CONCEALED BY SUPPORT OF SUSPENSION MEMBERS

1. SCRIBE AND CUT PANELS TO FIT ACCURATELY AT BORDERS AND AT PENETRATIONS.

2. MEASURE EACH CEILING AREA AND ESTABLISH LAYOUT OF ACOUSTICAL UNITS TO BALANCE BORDER WIDTHS AT OPPOSITE EDGES OF EACH CEILING. AVOID THE USE OF LESS-THAN-HALF WIDTH UNITS AT BORDERS UNLESS DIMENSIONS ARE SPECIFICALLY SHOWN ON THE REFLECTED CEILING PLAN INDICATING THE USE OF LESS-THAN-HALF UNITS.

D. PROVIDE THE TENANT WITH THE FOLLOWING AFTER STORE TURNOVER: ALL FULL, UNDAMAGED CEILING TILES OF EACH TYPE USED PACKED IN ORIGINAL BOX(ES) AND CLEARLY MARKED. ALSO, PROVIDE ONE ADDITIONAL FULL BOX OF NEW CEILING TILES OF EACH TYPE USED IN ORIGINAL BOX(ES).

SECTION 09 65 00 - RESILIENT FLOORING

A. MATERIAL SELECTIONS: REFER TO DRAWINGS

1. VINYL COMPOSITION TILE AS INDICATED ON FINISH SCHEDULE ON DRAWINGS.

2. RESILIENT BASE: RUBBER BASE.

a. COIL STOCK ONLY IS ALLOWED.
b. PROVIDE FACTORY PREFORMED INTERIOR AND EXTERIOR CORNERS.
c. TRANSITION STRIPS: REFER TO DRAWINGS FOR DETAILS.

B. INSTALLATION MATERIALS

1. TROWELABLE UNDERLAYMENTS AND PATCHING COMPOUNDS: LATEX-MODIFIED, PORTLAND CEMENT BASED FORMULATION PROVIDED OR APPROVED BY TILE MANUFACTURER FOR APPLICATIONS INDICATED.

2. WAX SEALANT: REFER TO FLOORING MANUFACTURER'S RECOMMENDATIONS. APPLY AS SOON AS POSSIBLE AFTER FLOORING INSTALLATION AND AS RECOMMENDED BY FLOORING MANUFACTURER.

C. INSTALLATION SHALL CONFORM WITH MANUFACTURER'S WRITTEN INSTRUCTIONS.

1. PROVIDE THE TENANT WITH THE FOLLOWING AT STORE TURNOVER: ALL FULL, UNDAMAGED RESILIENT FLOOR TILES OF EACH TYPE USED PACKED IN ORIGINAL BOX(ES) AND CLEARLY MARKED.

SECTION 09 68 00 - CARPET

A. MATERIAL SELECTIONS: REFER TO DRAWINGS.

B. INSTALLATION MATERIALS AS RECOMMENDED BY CARPET MANUFACTURER FOR SUBSTRATE CONDITIONS ENCOUNTERED AND WHICH COMPLIES WITH FLAMMABILITY REQUIREMENTS FOR INSTALLED CARPET.

C. INSTALLATION: REFER TO C.R.I. MANUAL

SECTION 09 90 00 - PAINTING

A. DESCRIPTION OF WORK

1. PREPARATION OF NEW AND EXISTING SURFACES: PERFORMANCE AND COMPLETION OF PAINTING AND FINISHING NEW AND EXISTING EXTERIOR AND INTERIOR SURFACES, INCLUDING MECHANICAL AND ELECTRICAL WORK IN FINISHED SPACES.

2. EXCEPT AS OTHERWISE INDICATED, ALL NEW AND EXISTING SURFACES SHALL HAVE FINISH APPLIED TO THEM.

3. COLORS: SEE SCHEDULES AND NOTES ON DRAWINGS FOR FINISH COLOR AND MANUFACTURER.

4. T.G.C. SHALL DO ALL TOUCHUP AT COMPLETION OF THE JOB WHERE OTHER TRADES HAVE MARRED THE PAINTED SURFACES. CLEAN PAINT DROPPING FROM HARDWARE, FLOOR, ETC.

B. MAINTENANCE MATERIALS

1. LEAVE ONE UNOPENED GALLON ON SITE OF EACH TYPE AND COLOR FOR MAINTENANCE PURPOSES LABEL FOR POSITIVE IDENTIFICATION; INCLUDE DESIGNATION INDICATED ON FINISH SCHEDULE, DATE OF MIXING, AND CROSS REFERENCED MANUFACTURER USED.

C. PRODUCT DELIVERY, STORAGE, AND HANDLING

1. DELIVERY OF MATERIAL: DELIVER IN SEALED CONTAINERS WITH MANUFACTURER'S ORIGINAL LABELS LEGIBLE AND INTACT.

2. STORAGE OF MATERIALS: STORE IN MANNER RECOMMENDED BY THE MANUFACTURER AND AS REQUIRED BY BUILDING CODE AND COMPLY WITH HEALTH AND FIRE REGULATIONS.

3. HANDLING: TAKE ALL NECESSARY PRECAUTIONARY MEASURES TO PREVENT FIRE HAZARDS AND SPONTANEOUS COMBUSTION, PLACE COTTON WASTE, CLOTHS AND OTHER HAZARDOUS MATERIALS IN CONTAINERS. REMOVE DAILY FROM THE JOB SITE.

D. ENVIRONMENTAL CONDITIONS: COMPLY WITH MANUFACTURER'S RECOMMENDATIONS AS TO ENVIRONMENTAL CONDITIONS UNDER WHICH COATING AND COATING SYSTEMS CAN BE APPLIED.

E. PROTECTION

1. ADEQUATELY PROTECT OTHER SURFACES FROM DAMAGE. MAKE GOOD ANY DAMAGE CAUSED BY FAILURE TO PROVIDE SUITABLE PROTECTION.

2. REMOVAL OF HARDWARE AND MISCELLANEOUS ITEMS: REMOVE ELECTRICAL OUTLET AND SWITCH PLATES, MECHANICAL DIFFUSERS, ESCUTCHEONS, REGISTERS, SURFACE HARDWARE, FITTINGS, FASTENINGS, AND THE LIKE PRIOR TO STARTING WORK.

3. DROP CLOTHS: PROVIDE DROP CLOTHS, SHIELDS, AND PROTECTIVE EQUIPMENT. EXTEND PROTECTION TO SURFACES WITHIN PREPARATION AREAS.

F. GUARANTEE: FURNISH TWO-YEAR WARRANTY FOR FULL VALUE OF WORK INCLUDED THIS SECTION.

G. MATERIALS: REFER TO FINISH SCHEDULE ON DRAWINGS.

H. INSPECTION

1. BY STARTING PAINTING THE CONTRACTOR IMPLIES THAT HE HAS ACCEPTED THE SUBSTRATE SURFACES AS BEING FREE OF DEFECTS.

I. PREPARATION: NEW WORK

1. MISCELLANEOUS STEEL AND IRON, TO INCLUDE METAL DOORS AND FRAMES: REMOVE SURFACE CONTAMINATION FROM ALL SURFACES AND IMMEDIATELY APLY PRIME COAT.

2. WOOD PRODUCTS TO BE PAINTED: REMOVE SURFACE CONTAMINATION, DIRT, AND MINOR GRIT. SPOT COAT KNOTS, PITCH STREAKS AND SAPPY SECTIONS WITH SEALER. FILL AND NAIL HOLES AND FINE CRACKS AFTER PRIMER HAS DRIED AND SAND SMOOTH, LEVEL WITH SURFACE READY FOR FINISH COAT.

3. GYPSUM WALLBOARD

a. REMOVE ANY MINOR SUBSEQUENT CONTAMINATION, DUST, AND DIRT.
b. IF SURFACE DEFECTS APPEAR AFTER PRIME COATING, NOTIFY JOB SUPERINTENDENT AND ARCHITECT. REQUIRE DEFECTS REPAIRED BY AND AT EXPENSE OF DRYWALL TRADE. AFTER DEFECTS ARE CORRECTED, PROCEED WITH FINISH PAINTING, AGAIN USING PRIMER OVER REPAIRED AREAS.

4. MECHANICAL AND ELECTRICAL WORK: PREPARE METAL SURFACES AS SPECIFIED HEREIN ABOVE FOR MISCELLANEOUS STEEL AND IRON AS APPLICABLE TO TYPE OF MATERIAL SCHEDULED TO BE PAINTED. REMOVE DIRT, GREASE, AND OIL FROM CANVAS AND COTTON INSULATION COVERING.

J. PREPARATION: EXISTING WORK

1. CLEAN TO EXTENT REQUIRED, AND OR REMOVE EXIST. COATINGS.

2. WOOD PRODUCTS TO BE PAINTED: THICK AND SHARP EDGES OF PAINT BUILDUPS, RUNS, AND SAGS SHALL BE SANDED SMOOTH (FEATHERED EDGE). REPAIR AND SAND SMOOTH ALL SURFACE DEFECTS, INCLUDING UNSET/RESET NAILS, CRACKS AND GOUGES.

3. GYPSUM WALLBOARD: FILL AND SAND SMOOTH ALL SURFACE DEFECTS. SAND GLASSY SURFACES PRIOR TO APPLICATION OF PAINT.

K. APPLICATION

1. APPLY PAINT OR FINISH BY METHODS GENERALLY ACCEPTED BY THE TRADE TO ACHIEVE APPROVED FINISHES.

2. COMPLY WITH RECOMMENDATIONS OF PRODUCT MANUFACTURER FOR DRYING TIME BETWEEN SUCCEEDING COATS.

3. VARY COLOR OF SUCCESSIVE UNDERCOATS.

4. SAND AND DUST BETWEEN EACH COAT TO REMOVE DEFECTS VISIBLE FROM A DISTANCE OF 5 FEET.

5. ALL PAINT WORK SHALL BE FIRST QUALITY WITH NO DEFECTS.

6. EXPOSED CONCRETE: APPLY 2 COATS, VENTILATE AREA UNTIL DRY

7. DAMAGED FINISHES INCLUDING PREFINISHED OWNER FURNISHED ITEMS: PREPARE AND REFINISH AS SPECIFIED AND SCHEDULED FOR NEW WORK. ALL THE ABOVE SURFACES MAY NOT BE ENCOUNTERED DURING THE COURSE OF THIS PROJECT.

SECTION 10 44 00 - FIRE FIGHTING EQUIPMENT

A. PROVIDE MULTI-PURPOSE DRY CHEMICAL FIRE EXTINGUISHERS, ABC TYPE OR THE MINIMUM REQUIRED BY THE LOCAL AUTHORITY HAVING JURISDICTION.

B. FIRE EXTINGUISHERS SHALL BE UL LISTED EXTINGUISHER, 10 LB CAPACITY, ENAMELED STEEL CYLINDER WITH PRESSURE GAUGE. METAL VALVE AND SIPHON TUBE, REPLACEABLE MOLDED VALVE STEM SEALS, PULL PIN-UPRIGHT SQUEEZE GRIP OPERATION.

SECTION 10 28 00 - TOILET ACCESSORIES

A. G.C. SHALL INSPECT ANY EXISTING ACCESSORIES, THEIR CONDITION AND TYPE, FOR COMPLIANCE WITH THE LIST OF TOILET ACCESSORIES INDICATED ON THE DRAWINGS. ANY ACCESSORY EQUAL TO THE PRODUCTS SPECIFIED SHALL BE ALLOWED UPON APPROVAL BY THE BROWN SHOE CONSTRUCTION MANAGER.

B. PRODUCT DELIVERY, HANDLING AND STORAGE

1. RECEIVE, INVENTORY, AND STORE PRODUCTS PRIOR TO INSTALLATION.

C. ACCESSORIES: AS INDICATED ON THE DRAWINGS.

D. INSTALLATION

1. FOLLOW MANUFACTURER'S DIRECTION SUITING INSTALLATION CONDITIONS, USING TAMPER PROOF OR CONCEALED FASTENERS.

2. PROVIDE AND INSTALL HANDRAILS IN SIZES AND LOCATIONS AS REQUIRED BY LOCAL AND STATE BUILDING CODES. ATTACH FIRMLY TO WALLS.

SECTION 12 00 00 - FURNISHINGS

A. ALL WALL FIXTURES AND CASH WRAPS ARE TO BE SET IN PLACE BY THE TENANT FIXTURE VENDOR, UNLESS NOTED OTHERWISE.

B. INSTALL FIXTURES PLUMB AND LEVEL. ATTACH FIXTURES TO WALL WITH CONCEALED FASTENERS, ATTACH TO METAL STUDS WHERE POSSIBLE.

C. KEEP FIXTURES PROTECTED UNTIL CONSTRUCTION HAS BEEN COMPLETED. IF PROBLEMS ARE EXPERIENCED IN THE PLACEMENT OF FIXTURES, CONTACT THE ARCHITECT TO RESOLVE THE MANNER IN WHICH THE SITUATION IS TO BE CORRECTED. REPAIR ANY DAMAGE TO FIXTURES BEFORE CONSTRUCTION IS COMPLETE.

D. ALL MOVABLE FLOOR FIXTURES WILL BE FURNISHED BY THE OWNER AND INSTALLED BY THE FIXTURE VENDOR UNLESS NOTED.

SECTION 23 05 00 - GENERAL PROVISIONS

A. FURNISHING LABOR, MATERIALS, EQUIPMENT AND SERVICES REQUIRED AS SHOWN ON THE DRAWINGS AND SPECIFIED IN DIVISION 23.

B. ALL WORK SHALL BE COMPLETE AND LEFT IN OPERATING CONDITION.

C. INCLUDE ALL PARTS AND LABOR WHICH ARE INCIDENTAL AND NECESSARY FOR A COMPLETE AND OPERABLE INSTALLATION EVEN THOUGH NOT SPECIFICALLY MENTIONED IN THE CONTRACT DOCUMENTS.

D. ARRANGE WITH APPROPRIATE UTILITY COMPANIES TO PROVIDE TEMPORARY AND PERMANENT UTILITY SERVICES AS REQUIRED AND COORDINATE THEIR INSTALLATION WITH CONSTRUCTION PROGRESS OF THIS PROJECT. PAY ALL FEES AND COSTS CHARGED BY UTILITY COMPANIES FOR UTILITY SERVICES.

E. OBTAIN ALL TEMPORARY AND PERMANENT PERMITS AND LICENSES REQUIRED IN CONNECTION WITH THIS DIVISION'S WORK. PAY ALL FEES AND EXPENSES REQUIRED FOR SUCH PERMITS AND LICENSES.

F. REQUEST INSPECTIONS AS REQUIRED BY REGULATING AGENCIES AND/OR REGULATIONS. PAY ALL CHARGES FOR INSPECTIONS BY REGULATING AGENCIES OF INSTALLATIONS OF PLANS SPECIFICATIONS.

G. PROVIDE THE OWNER WITH A CERTIFICATE OF FINAL INSPECTION AND APPROVAL BY ENFORCEMENT AUTHORITIES.

H. MEET OR EXCEED ALL CURRENT APPLICABLE CODES, ORDINANCES AND REGULATIONS FOR ALL INSTALLATIONS. PROMPTLY NOTIFY THE ENGINEER, IN WRITING, IF THE CONTRACT DOCUMENTS APPEAR TO CONFLICT WITH GOVERNING CODES AND REGULATIONS. CONTRACTOR ASSUMES ALL RESPONSIBILITY AND COSTS FOR CORRECTING NON-COMPLYING WORK INSTALLED WITHOUT NOTIFYING THE ENGINEER.

I. HIGHER QUALITY OF WORKMANSHIP AND MATERIALS INDICATED IN THE CONTRACT DOCUMENTS TAKES PRECEDENCE OVER THAT ALLOWED IN REFERENCED CODES AND STANDARDS.

J. FURNISH: TO OBTAIN, COORDINATE, SUBMIT THE NECESSARY DRAWINGS, DELIVER TO THE JOB SITE IN NEW CONDITION READY FOR INSTALLATION, UNLOAD AND UNPACK, AND GUARANTEE.

K. INSTALL: TO RECEIVE AT THE JOB SITE, STORE, ASSEMBLE, ERECT, SET IN PLACE, ANCHOR, APPLY, FINISH, PROTECT, CLEAN, TEST, START-UP, AND MAKE READY FOR OWNER'S USE.

L. PROVIDE: TO FURNISH AND INSTALL.

M. BEFORE SUBMITTING A PROPOSAL ON THE WORK CONTEMPLATED, EXAMINE THE SITE OF THE PROPOSED WORK AND BECOME THOROUGHLY FAMILIAR WITH EXISTING CONDITIONS AND LIMITATIONS. NO EXTRA COMPENSATION WILL BE ALLOWED BECAUSE OF MISUNDERSTANDING AS TO THE AMOUNT OF WORK INVOLVED OR BIDDERS LACK OF KNOWLEDGE OF EXISTING CONDITIONS WHICH COULD HAVE BEEN DISCOVERED OR REASONABLY ANTICIPATED PRIOR TO BIDDING.

N. CONTRACTOR IS RESPONSIBLE FOR DIMENSIONAL DIFFERENCES, WEIGHTS, ELECTRICAL REQUIREMENTS AND ANY OTHER RESULTING CHANGES, WHEN USING EQUIPMENT OTHER THAN THAT SCHEDULED ON THE DRAWINGS. CONTRACTOR IS RESPONSIBLE FOR ANY ADDITIONAL COSTS INCURRED AS A RESULT OF SUBSTITUTIONS.

O. MECHANICAL EQUIPMENT AND SYSTEMS SHOWN ON THE DRAWINGS AS EXISTING, HAVE BEEN BASED ON EXISTING PLANS, AND MAY NOT BE INSTALLED AS ORIGINALLY SHOWN. IT IS THE CONTRACTORS RESPONSIBILITY TO VISIT THE SITE AND MAKE EXACT DETERMINATION OF THE EXISTENCE, LOCATION AND CONDITION OF SUCH FACILITIES PRIOR TO SUBMITTING A BID.

P. CONSULT THE DRAWINGS AND SPECIFICATIONS OF DIVISION 26 AND OTHER TRADES FOR CORRELATING INFORMATION AND LAY OUT WORK SO THAT IT WILL COORDINATE WITH OTHER TRADES. VERIFY DIMENSIONS AND CONDITIONS (I.E., FINISHED CEILING HEIGHTS, FOOTING AND FOUNDATION ELEVATIONS, BEAM DEPTHS, ETC.) WITH THE ARCHITECTURAL AND STRUCTURAL DRAWINGS.

Q. DRAWINGS MAY NOT SHOW EVERY RISE AND OFFSET REQUIRED FOR THE WORK. INSTALL PIPING AND DUCTWORK TO ACCOMMODATE THE BUILDING STRUCTURE AND THE WORK OF OTHER TRADES, WITH ALL REQUIRED OFFSETS AND WITHOUT EXTRA COST TO THE OWNER.

R. OBTAIN EXACT LOCATION OF CONNECTION TO EQUIPMENT, FURNISHED BY OTHERS, FROM THE PERSON FURNISHING THE EQUIPMENT.

S. GUARANTEE AND MAINTAIN THE STABILITY OF WORK AND MATERIALS AND KEEP SAME IN PERFECT REPAIR AND CONDITION FOR THE PERIOD OF ONE (1) YEAR AFTER THE FINAL COMPLETION OF THE WORK AS EVIDENCED BY ISSUANCE OF THE FINAL CERTIFICATE BY THE ARCHITECT

T. DEFECTS OF ANY KIND DUE TO FAULTY WORK OR MATERIALS APPEARING DURING THE ABOVE MENTIONED PERIOD MUST BE IMMEDIATELY MADE GOOD BY THE CONTRACTOR AT HIS OWN EXPENSE TO THE ENTIRE SATISFACTION OF THE OWNER AND ARCHITECT AND ENGINEER. INCLUDE DAMAGE TO THE FINISH OR THE BUILDING RESULTING FROM THE ORIGINAL DEFECT OR REPAIRS.

U. MAGNETIC STARTERS, DISCONNECTS, AND POWER WIRING PROVIDED BY THE ELECTRICAL CONTRACTOR, UNLESS OTHERWISE SPECIFIED.

V. CONTROL AND INTERLOCK WIRING PROVIDED BY THE MECHANICAL CONTRACTOR, UNLESS OTHERWISE SPECIFIED.

W. PROVIDE ONLY PRODUCTS FROM MANUFACTURER'S WITH LOCAL REPRESENTATION THAT CAN PROVIDE COMPLETE COVERAGE, PARTS AND LABOR, FOR REPLACEMENT AND SERVICE OF THEIR PRODUCTS. PROVIDE ONLY EQUIPMENT THAT WILL FIT IN THE SPACE AVAILABLE AND BE COMPLETELY SERVICEABLE. BRING ANY CONFLICTS TO THE ENGINEER'S ATTENTION PRIOR TO ORDERING THE EQUIPMENT.

X. COORDINATE/SCHEDULE ALL WORK WITH THE OWNER TO MINIMIZE ANY DISRUPTIONS. CONFINE ALL INTERRUPTIONS TO THE SMALLEST POSSIBLE AREA. PROVIDE TEMPORARY CONNECTIONS IF REQUIRED TO PROVIDE CONTINUITY OF SERVICE.

Y. INSPECT ALL AREAS AFFECTED BY THE INTERRUPTIONS AND RETURN ALL AUTOMATICALLY CONTROLLED EQUIPMENT, ELECTRICALLY OPERATED EQUIPMENT TO THE SAME OPERATING CONDITION PRIOR TO THE INTERRUPTION.

Z. NO FIRE SPRINKLER OR FIRE ALARM SYSTEMS ARE TO REMAIN INACTIVE AT THE END OF THE WORK DAY. ASSURE THAT THE FIRE SPRINKLER OR FIRE ALARM SYSTEM IS OPERATIONAL AT THE END OF EACH WORK DAY. COORDINATE WITH THE OWNER.

AA. PROVIDE NEW MATERIAL AND EQUIPMENT, UNLESS NOTED OTHERWISE. PROTECT SAME FROM DAMAGE, DIRT AND THE WEATHER.

BB. PROVIDE THE HIGHEST QUALITY WORKMANSHIP AND PERFORM ALL WORK ONLY BY SKILLED MECHANICS. INSTALL MATERIAL AND EQUIPMENT IN ACCORDANCE WITH MANUFACTURERS' RECOMMENDATIONS, INSTRUCTIONS AND CURRENT STANDARDS.

CC. THE ENGINEER RESERVES THE RIGHT TO REJECT MATERIAL OR WORKMANSHIP NOT IN ACCORDANCE WITH THE CONTRACT DOCUMENTS, BEFORE OR AFTER INSTALLATION.

DD. ALL PIPING AND DUCTWORK SHALL BE RUN IN THE MOST DIRECT AND STRAIGHT MANNER POSSIBLE MAINTAINING PROPER GRADING.

EE. IT IS THE INTENT OF THESE PLANS AND SPECIFICATIONS THAT MOST PIPING AND DUCTWORK BE CONCEALED. WHERE EXPOSED, RUN AS CLOSE TO CEILING AND/OR WALL AS POSSIBLE PARALLEL WITH ADJACENT STRUCTURAL OR ARCHITECTURAL ELEMENTS.

FF. DO NOT INSTALL PIPING OR DUCTWORK IN ANY SWITCHGEAR, TRANSFORMER, ELEVATOR EQUIPMENT, TELEPHONE, OR ELECTRICAL EQUIPMENT ROOM, UNLESS IT IS A BRANCH SERVING THAT ROOM.

GG. DO NOT INSTALL PIPING OR DUCTWORK ABOVE SWITCHBOARDS, PANELBOARDS, CONTROL PANELS, MOTOR CONTROL CENTERS, ETC.

HH. ARRANGE WORK TO FACILITATE MAINTENANCE, REPAIR OR REPLACEMENT OF EQUIPMENT. PROVIDE ACCESS FOR DEVICES THAT REQUIRE MAINTENANCE. FOR CONCEALED DEVICES, VERIFY THAT ACCESS PANELS ARE PROPERLY LOCATED AND LABELED.

II. PERFORM ALL CUTTING AND PATCHING NECESSARY TO WORK, UNLESS SPECIFICALLY DELEGATED TO THE G.C.. OBTAIN SPECIAL PERMISSION FROM THE STRUCTURAL ENGINEER BEFORE CUTTING STRUCTURAL MEMBERS OR FINISHED MATERIAL. PERFORM ALL PATCHING IN SUCH A MANNER AS TO LEAVE NO VISIBLE TRACE AND RETURN THE AREA AFFECTED TO THE CONDITION OF UNDISTURBED WORK. PERFORM ALL PATCHING BY WORKERS EXPERIENCED, SKILLED, AND LICENSED FOR THE PARTICULAR TYPE OF WORK INVOLVED. INFERIOR WORK WILL NOT BE ACCEPTED.

JJ. PATCH ALL HOLES LEFT AS A RESULT OF DEMOLITION OF MECHANICAL EQUIPMENT AND DEVICES.

KK. PREVENT THE SPREAD OF DUST, DEBRIS, AND OTHER MATERIAL INTO ADJACENT AREAS.

LL. REPLACE ALL CEILING TILES DAMAGED DURING INSTALLATION OF WORK, WITH NEW TILE.

MM. REFINISH ALL MECHANICAL EQUIPMENT DAMAGED DURING SHIPPING AND/OR INSTALLATION TO ITS ORIGINAL CONDITION. REMOVE ALL RUST; PRIME, AND PAINT PER MANUFACTURER'S RECOMMENDATIONS FOR FINISH EQUAL TO ORIGINAL.

NN. DO NOT USE HEATING, VENTILATING AND AIR CONDITIONING SYSTEMS PROVIDED IN THIS SCOPE OF WORK FOR TEMPORARY HEATING, VENTILATING AND AIR CONDITIONING DURING CONSTRUCTION.

OO. PROTECT OPENINGS AND EQUIPMENT FROM OBSTRUCTION, BREAKAGE, MISUSE, DAMAGE OR BLEMISHES. PROTECT MATERIALS AND EQUIPMENT IMMEDIATELY UPON RECEIPT AT THE JOB SITE OR IMMEDIATELY AFTER THEY HAVE BEEN REMOVED FROM THEIR SHIPPING CONTAINERS. UNLESS NOTED OTHERWISE, KEEP THEM CLEAN AND UNDAMAGED UNTIL FINAL ACCEPTANCE OF THE ENTIRE PROJECT BY THE OWNER. WHEN A PORTION OF THE BUILDING IS OCCUPIED BY THE OWNER BEFORE SUBSTANTIAL COMPLETION OF THE ENTIRE PROJECT, MAKE ARRANGEMENTS TO TRANSFER RESPONSIBILITY FOR PROTECTION AND HOUSEKEEPING FOR THE OCCUPIED PORTION.

PP. PROTECT PIPE, DUCT AND EQUIPMENT OPENINGS WITH TEMPORARY PLUGS OR CAPS. KEEP OPENINGS COVERED UNTIL PERMANENT CONNECTIONS ARE COMPLETE.

QQ. CONTRACTOR IS RESPONSIBLE FOR ANY DAMAGE TO MECHANICAL EQUIPMENT, MATERIALS OR WORK UNTIL FINAL ACCEPTANCE OF THE ENTIRE PROJECT BY THE OWNER.

RR. KEEP THE PREMISES FREE FROM ACCUMULATION OF WASTE MATERIAL OR RUBBISH, CAUSED BY HIS EMPLOYEES OR WORK, AT ALL TIMES. REMOVE RUBBISH, TOOLS, SCAFFOLDING, AND SURPLUS MATERIALS FROM AND ABOUT THE BUILDING, AND LEAVE WORK AREAS "BROOM CLEAN" OR ITS EQUIVALENT UPON COMPLETION OF THE WORK. CLEAN MECHANICAL EQUIPMENT AND REMOVE TEMPORARY IDENTIFICATION.

SS. IN CASE OF DISPUTE, THE OWNER WILL REMOVE THE RUBBISH AND CHARGE THE COST TO THE CONTRACTOR.

TT. BEFORE START-UP, LUBRICATE, CHARGE, AND FILL SYSTEMS AS SPECIFIED AND ACCORDING TO MANUFACTURER'S INSTRUCTIONS.

UU. CLEAN, DISINFECT, AND TEST ALL PLUMBING AND PIPING SYSTEMS.

VV. PERFORM TESTING, ADJUSTING AND BALANCING IN ACCORDANCE WITH THAT SECTION.

WW. OPERATE EQUIPMENT AND SYSTEMS IN ALL THEIR OPERATING MODES, TO VERIFY PROPER OPERATION, PRIOR TO FINAL FIELD OBSERVATION AND OWNER INSTRUCTIONS.

XX. PROVIDE ASSISTANCE TO TEST, ADJUSTING AND BALANCING CONTRACTOR BY MAKING ADJUSTMENTS TO SYSTEM AND SYSTEM COMPONENTS REQUIRED FOR ACHIEVING DESIGN PERFORMANCE.

YY. IF ACCEPTABLE PERFORMANCE OF ANY TEST IS NOT ACHIEVED, MAKE THE NECESSARY CORRECTIONS AND THE TEST SHALL BE REPEATED UNTIL ACCEPTABLE PERFORMANCE IS ACHIEVED.

ZZ. FULLY INSTRUCT THE OWNER'S DESIGNATED PERSONNEL IN THE OPERATION OF EACH MECHANICAL SYSTEM AT THE TIME IT IS PUT INTO SERVICE. PROVIDE INSTRUCTION USING COMPETENT INSTRUCTORS AND FACTORY TRAINED PERSONNEL.

AAA. INCLUDE DOCUMENTATION OF INSTRUCTIONS IN THE OPERATION AND MAINTENANCE MANUALS.

BBB. SUBMIT COMPLETED BOUND OPERATION AND MAINTENANCE MANUALS TO OWNER INCLUDING SHOP DRAWINGS, WARRANTIES, TEST REPORTS, CERTIFICATIONS, TEST AND BALANCE REPORTS, SYSTEM VALIDATION REPORTS AND RECORD DRAWINGS.

DEMOLITION

A. FURNISH LABOR, EQUIPMENT, AND MATERIALS REQUIRED FOR CUTTING, DEMOLITION, REMOVAL, PATCHING, AND RESTORATION WORK NECESSARY TO ACCOMPLISH AND COMPLETE ALL DEMOLITION, INCLUDING ANY RELOCATION OR REUSE OF EXISTING MATERIALS, EQUIPMENT, SYSTEMS, AS WELL AS THE DISPOSITION OF SALVAGED MATERIALS OR DEBRIS.

B. ACCOMPLISH ALL WORK OF CUTTING, REMOVAL, DEMOLITION, RELOCATION, PATCHING, AND RESTORATION BY USING ONLY MECHANICS SKILLED IN THE TRADE REQUIRED. PROVIDE FOR THE SAFETY OF THE EXISTING BUILDING AND PERSONNEL, AS WELL AS FOR NEW CONSTRUCTION AS A RESULT OF WORK, PROCEDURES, OPERATIONS OR ACTIVITIES UNDER THIS CONTRACT.

C. WHERE THE WORK OF REMOVALS, DEMOLITION, CUTTING AND SIMILAR WORK INVOLVES STRUCTURAL CONSIDERATIONS, CONSULT WITH STRUCTURAL ENGINEER. EXERCISE EXTREME CARE TO AVOID DAMAGE AND PRESERVE THE SAFETY OF THE STRUCTURE AND OF ALL PERSONNEL. PARTICULAR CARE MUST BE TAKEN WHERE THE DEMOLITION OR REMOVALS OCCUR ADJACENT TO OCCUPIED AREAS.

D. UTILIZE COMPETENT AND QUALIFIED TECHNICAL ASSISTANCE TO DEVELOP SAFE METHODS AND TECHNIQUES TO ACCOMPLISH THE WORK, INCLUDING TEMPORARY SHORING AND SUPPORTS, METHODS OF REMOVAL AND OTHER CONSIDERATIONS. DESIGN AND PLACE ALL PERMANENT OR TEMPORARY SUPPORTS TO CARRY ALL LOADS DOWN TO SOUND BEARING.

SECTION 23 07 13 - DUCTWORK INSULATION

A. MATERIALS: CONFORM TO MAXIMUM FLAME SPREAD/SMOKE DEVELOPED RATING OF 25/50 IN ACCORDANCE WITH ASTM E84, NFPA 255 AND UL 723.

B. CONFORM TO ASTM STANDARDS FOR "K" VALUE, MOISTURE VAPOR TRANSMISSION, MAXIMUM MOISTURE ABSORPTION, JACKET, INSULATING CEMENT, AND ADHESIVE.

C. MANUFACTURER: SCHULLER-MANVILLE 800 SERIES SPIN-GLAS

1. GLASS FIBER (FLEXIBLE/RIGID): SCHULLER-MANVILLE 800 SERIES SPIN-GLAS. EQUIVALENT PRODUCTS: CERTAINTEED, KNAUF, OWENS-CORNING.

2. GLASS FIBER DUCT LINER, FLEXIBLE: SCHULLER-MANVILLE PERMACOTE LINACOUSTIC STANDARD. EQUIVALENT PRODUCTS: CERTAINTEED, KNAUF, OWENS-CORNING.

D. INSTALL IN ACCORDANCE WITH NAIMA NATIONAL INSULATION STANDARDS.

E. DUCTWORK EXPOSED IN MECHANICAL EQUIPMENT ROOMS OR FINISHED SPACES BELOW 10 FEET ABOVE FINISHED FLOOR: FINISH WITH CANVAS JACKET SIZED FOR FINISH PAINTING.

F. EXTERIOR APPLICATIONS: PROVIDE INSULATION WITH WEATHERPROOF VAPOR BARRIER JACKET. COVER WITH CAULKED ALUMINUM WATERPROOF JACKET WITH SEAMS LOCATED ON BOTTOM SIDE OF HORIZONTAL DUCT SECTION.

G. SCHEDULE: INSULATION THICKNESS PER LOCAL CODE OR ASHRAE STANDARD 90.1-1999, WHICHEVER IS MORE STRINGENT.

SECTION 22 07 19 - PIPING INSULATION

A. CONFORM TO MAXIMUM FLAME SPREAD/SMOKE DEVELOPED RATING OF 25/50 IN ACCORDANCE WITH ASTM E84, NFPA 255 AND UL 723.

B. CONFORM TO ASTM STANDARDS FOR "K" VALUE, MOISTURE VAPOR TRANSMISSION, MAXIMUM MOISTURE ABSORPTION, JACKET, INSULATING CEMENT, AND ADHESIVE.

C. MANUFACTURER:

1. GLASS FIBER: SCHULLER-MANVILLE,CERTAINTEED, KNAUF, OWENS-CORNING.

2. CELLULAR FOAM: ARMSTRONG, HALSTEAD, IMCOA/NOMACO, RUBATEX, ARMAFLEX 2000.

D. INSTALL IN ACCORDANCE WITH NAIMA NATIONAL INSULATION STANDARDS. VERIFY THAT PIPING HAS BEEN TESTED BEFORE APPLYING INSULATION MATERIALS. VERIFY THAT SURFACES ARE CLEAN AND DRY, WITH FOREIGN MATERIAL REMOVED.

E. CONTINUE INSULATION THROUGH WALLS, SLEEVES, PIPE HANGERS, AND OTHER PIPE PENETRATIONS. FINISH AT SUPPORTS, PROTRUSIONS, AND INTERRUPTIONS.

F. BURIED PIPING: PROVIDE FACTORY FABRICATED ASSEMBLY WITH INNER ALL-PURPOSE SERVICE JACKET WITH SELF-SEALING LAP, AND ASPHALT IMPREGNATED OPEN MESH GLASS FABRIC, WITH ONE MIL THICK ALUMINUM FOIL SANDWICHED BETWEEN THREE LAYERS OF BITUMINOUS COMPOUND; OUTER SURFACE FACED WITH A POLYESTER FILM.

BROWN SHOE COMPANY, INC.
8300 Maryland Ave.
Clayton, MO 63105
314/854-4000

BROWN
SHOE COMPANY

09/15/2014		BID & PERMIT
09/26/2014	2	LANDLORD COMMENTS

TRICARICO®
Tricarico Architecture and Design PC
502 Valley Road Wayne, NJ 07470
T (973) 692-0222 F (973) 692-0223
www.tricarico.com

PROHIBITION ON REUSE:
INFORMATION CONTAINED IN THESE DRAWINGS AND SPECIFICATIONS WAS PREPARED FOR USE ON THE SPECIFIC SITE INDICATED. USE OF THIS INFORMATION ON ANOTHER PROJECT IS PROHIBITED AND CONTRARY TO LAW UNLESS EXPRESSLY AUTHORIZED IN WRITING BY THE AUTHOR.

THESE DRAWINGS AND SPECIFICATIONS ARE AND SHALL REMAIN THE PROPERTY OF THE BROWN SHOE, INC. DISPLAY, REPRODUCTION, OR USE FOR ANY BUT THE SPECIFICALLY AGREED UPON PURPOSES, WITHOUT THE WRITTEN AUTHORIZATION OF BROWN SHOE, INC. IS STRICTLY PROHIBITED.

COPYRIGHT NOTICE:
THESE DRAWINGS AND SPECIFICATIONS ARE SUBJECT TO COPYRIGHT PROTECTION AS AN "ARCHITECTURAL WORK" UNDER SEC. 102 OF THE COPYRIGHT ACT, 17 U.S.C. AS AMENDED DECEMBER 1990; KNOWN AS THE ARCHITECTURAL WORKS COPYRIGHT PROTECTION ACT OF 1990. THE PROTECTION INCLUDES, WITHOUT LIMITATION, THE OVERALL FORM, ARRANGEMENT, AND COMPOSITION OF SPACES AND ELEMENTS OF THE DESIGN.

FAMOUS footwear
STORE #3406
NORTH POINT MALL
1000 NORTH POINT CIR SUITE 2208
ALPHARETTA, GA 30022

DESIGNED BY: BF
DRAWN BY:
CHECKED BY:
DATE: 09/26/14
PROTO. VER.: 010413
PROJECT NO: 140341

SPECIFICATIONS

SP-2

COPYRIGHT ©2014 BY BROWN SHOE, INC. PROTOTYPE VERSION: 010413

G. SCHEDULE: INSULATION THICKNESS PER LOCAL CODE OR ASHRAE STANDARD 90.1–1999, WHICHEVER IS MORE STRINGENT.

SECTION 22 11 00 - PLUMBING PIPING

A. SANITARY & STORM PIPING: ASTM A74 SERVICE WEIGHT.

1. CAST IRON PIPE: ASTM A74 SERVICE WEIGHT, FITTINGS: CAST IRON, JOINTS: HUB–AND–SPIGOT, COMPRESSION TYPE WITH NEOPRENE GASKETS OR LEAD AND OAKUM.
2. CAST IRON PIPE: CISPI 301, HUBLESS, FITTINGS: CAST IRON, JOINTS: NEOPRENE GASKET AND STAINLESS STEEL CLAMP AND SHIELD ASSEMBLIES.
3. ABS PIPE (BELOW GRADE): ASTM D2661, FITTINGS: ABS, JOINTS: SOLVENT WELD.
4. PVC PIPE (BELOW GRADE): ASTM D2665, FITTINGS: PVC, JOINTS: SOLVENT WELD WITH SOLVENT CEMENT.
5. COPPER TUBE (ABOVE GRADE): ASTM B88 TYPE "L", HARD TEMPER ONLY. EXCEPT THESE MATERIALS SHALL NOT BE USED TO RECEIVE THE WASTES FROM URINALS NOR WASTES FROM WATER CLOSETS IN BATTERY, FITTINGS: CAST BRONZE, OR WROUGHT COPPER, JOINTS: SOLDER, GRADE 50B.

B. WATER PIPING.

1. COPPER TUBING (BELOW GRADE): ASTM B88, TYPE "K" SOFT COPPER, FITTINGS: CAST COPPER ALLOY OR WROUGHT COPPER AND BRONZE, JOINTS: BCUP SILVER BRAZE.
2. COPPER TUBING (ABOVE GRADE): ASTM B88, TYPE "L" HARD DRAWN, FITTINGS: CAST COPPER ALLOY OR WROUGHT COPPER AND BRONZE, JOINTS: BCUP SILVER BRAZE.

C. NATURAL GAS PIPING.

1. STEEL PIPE (BELOW GRADE): ASTM A53 SCHEDULE 40 BLACK, FITTINGS: FORGED STEEL WELDING TYPE, JOINTS: WELDED, JACKET: POLYETHYLENE JACKET OR DOUBLE LAYER, HALF–LAPPED 10 MIL POLYETHYLENE TAPE.
2. STEEL PIPE (ABOVE GRADE): ASTM A53 SCHEDULE 40 BLACK. 2 INCH AND SMALLER EXPOSED, FITTINGS: MALLEABLE IRON, JOINTS: THREADED.
3. STEEL PIPE (ABOVE GRADE): ASTM A53 SCHEDULE 40 BLACK. 2 INCH AND SMALLER CONCEALED, AND 2 ½ INCH AND LARGER, FITTINGS: FORGED STEEL WELDING TYPE, JOINTS: WELDED

D. PREPARE PIPING CONNECTIONS TO EQPT. WITH FLANGES OR UNIONS.

E. PROVIDE NON–CONDUCTING DIELECTRIC CONNECTIONS WHEREVER JOINTING DISSIMILAR METALS.

F. INSTALL VENT PIPING PENETRATING ROOFED AREAS TO MAINTAIN INTEGRITY OF ROOF ASSEMBLY.

G. WHERE PIPE SUPPORT MEMBERS ARE WELDED TO STRUCTURAL BUILDING FRAMING, SCRAPE, BRUSH CLEAN, AND APPLY ONE COAT OF ZINC RICH PRIMER TO WELDING.

H. PROVIDE SUPPORT FOR UTILITY METERS IN ACCORDANCE WITH REQUIREMENTS OF UTILITY COMPANIES.

I. PREPARE EXPOSED, UNFINISHED PIPE, FITTINGS, SUPPORTS, AND ACCESSORIES READY FOR FINISH PAINTING.

J. PIPE VENTS FROM GAS PRESSURE REDUCING VALVES TO OUTDOORS AND TERMINATE IN WEATHER PROOF HOOD.

K. SLEEVE PIPES PASSING THROUGH PARTITIONS, WALLS AND FLOORS.

L. USE GROOVED MECHANICAL COUPLINGS AND FASTENERS ONLY IN ACCESSIBLE LOCATIONS.

M. PROVIDE UNIONS DOWNSTREAM OF VALVES AND AT EQUIPMENT OR APPARATUS CONNECTIONS.

N. PROVIDE BRASS MALE ADAPTERS EACH SIDE OF VALVES IN COPPER PIPED SYSTEM. SOLDER ADAPTERS TO PIPE.

O. ESTABLISH INVERT ELEVATIONS, SLOPES FOR DRAINAGE TO 1/4 INCH PER FOOT (SMALLER THAN 3 INCH PIPE), AND 1/8 INCH PER FOOT (3 INCHES AND LARGER) MINIMUM. MAINTAIN GRADIENTS.

P. SLOPE WATER PIPING MINIMUM 0.25 PERCENT AND ARRANGE TO DRAIN AT LOW POINTS.

Q. PROVIDE NEW [SANITARY] [AND] [STORM] SEWER SERVICES. BEFORE COMMENCING WORK CHECK INVERT ELEVATIONS REQUIRED FOR SEWER CONNECTIONS, CONFIRM INVERTS AND ENSURE THAT THESE CAN BE PROPERLY CONNECTED WITH SLOPE FOR DRAINAGE AND COVER TO AVOID FREEZING.

R. PROVIDE SUPPORT AND EQUIPMENT REQUIRED TO CONTROL EXPANSION AND CONTRACTION OF PIPING. PROVIDE LOOPS, PIPE OFFSETS, AND SWING JOINTS, OR EXPANSION JOINTS WHERE REQUIRED.

S. PROVIDE HANGERS IN QUANTITY AND SPACING REQUIRED TO SUFFICIENTLY SUPPORT PIPING.

SECTION 22 05 23 - VALVES & PLUMBING SPECIALTIES

A. MANUFACTURERS:

1. GATE VALVES (UP TO AND INCLUDING 2"): STOCKHAM MODEL B–105, OR EQUIVALENT BY: HAMMOND, KITZ, MILWAUKEE, NIBCO, CRANE.
2. BALL VALVES (UP TO AND INCLUDING 2"): APOLLO 77–100/77–200 SERIES, OR EQUIVALENT BY: HAMMOND, KITZ, MILWAUKEE, NIBCO, WATTS, CRANE.
3. BUTTERFLY VALVES: MUELLER STEAM SPECIALTIES SERIES 65/66, OR EQUIVALENT BY: CENTERLINE, CRANE, HAMMOND, KITZ, MILWAUKEE, NIBCO,
4. SWING CHECK VALVES (UP TO AND INCLUDING 2–1/2"): STOCKHAM MODEL B–309/B–319, OR EQUIVALENT BY: HAMMOND, KITZ, MILWAUKEE, NIBCO, CRANE.
5. BALL VALVES (FOR NATURAL GAS): APOLLO 80–100 SERIES, OR EQUIVALENT BY: HAMMOND, KITZ, MILWAUKEE, NIBCO, WATTS
6. TEMP. AND PRESS. RELIEF VALVE (UP TO 80,000 BTU INPUT): WATTS 10L MODEL M7
7. WATER HAMMER ARRESTOR: WATTS SERIES 15
8. REDUCED PRESSURE ZONE (RPZ) BACKFLOW PREVENTER: WATTS SERIES 909
9. RPZ AIR GAP FITTING: WATTS 909AG
10. RPZ AIR GAP VENT ELBOW: WATTS 909EL (REQUIRED IN ADDITION TO 909AG IF MTD. VERTICALLY).
11. BACKFLOW PREVENTER: WATTS 9BD
12. VACUUM BREAKER: WATTS N36 –3/4"
13. PRESSURE REDUCING VALVE: WATTS SERIES U5
14. ATMOSPHERIC VACUUM BREAKER: WATTS SERIES 288A
15. HOSE END VACUUM BREAKER: WATTS SERIES 8
16. DIELECTRIC UNION: WATTS SERIES 3000
17. TRAP SEAL PRIMER VALVE: JOSAM 88250, OR EQUIVALENT BY: J.R. SMITH, WADE, ZURN
    a. INSTALL APPROVED POTABLE WATER PROTECTION DEVICES ON PLUMBING LINES WHERE CONTAMINATION OF DOMESTIC WATER MAY OCCUR; ON BOILER FEED WATER LINES, JANITOR ROOMS, FIRE SPRINKLER SYSTEMS, PREMISE ISOLATION, IRRIGATION SYSTEMS, FLUSH VALVES, INTERIOR AND EXTERIOR HOSE BIBS.
    b. INSTALL WATER HAMMER ARRESTORS COMPLETE WITH ACCESSIBLE ISOLATION VALVE ON HOT AND COLD WATER SUPPLY PIPING WHERE REQUIRED BY CODE AND PER MANUFACTURERS RECOMMENDATIONS/REQUIREMENTS.
    c. INSTALL AIR CHAMBERS ON HOT AND COLD WATER SUPPLY PIPING TO EACH FIXTURE OR GROUP OF FIXTURES (EACH WASHROOM). FABRICATE SAME SIZE AS SUPPLY PIPE OR 3/4–INCH MINIMUM, AND MINIMUM 18 INCHES LONG.

SECTION 21 11 00 - SPRINKLER SYSTEMS

A. CONTRACTOR SHALL DESIGN AND HYDRAULICALLY CALCULATE THE NEW AND RENOVATION OF EXISTING PIPING SYSTEMS, INCLUDING LOCATION OF ALL VALVES, DEVICES, AND SPRINKLER HEADS. DESIGN SPRINKLER SYSTEM PIPING BASED ON HAZARD RATING AS OF THE MOST STRINGENT OF THE REGULATING AGENCIES RESPONSIBLE FOR THIS FACILITY, INCLUDING THE OWNER INSURANCE COMPANY REQUIREMENTS AND THE GOVERNING AUTHORITIES, PERFORM WORK IN ACCORDANCE WITH NFPA 13.

B. SUBMIT SHOP DRAWINGS, PRODUCT DATA, AND HYDRAULIC CALCULATIONS TO AUTHORITY HAVING JURISDICTION, AND OWNER'S INSURANCE UNDERWRITER FOR APPROVAL. SUBMIT PROOF OF APPROVAL TO ARCHITECT/ENGINEER.

C. EXISTING FIRE PROTECTION SYSTEMS:

1. IN BUILDINGS WITH EXISTING FIRE PROTECTION SYSTEMS, THE CONTRACTOR SHALL CLOSELY COORDINATE HIS WORK WITH THE OWNER TO MINIMIZE DISRUPTION OF THAT SYSTEM.
2. NO FIRE PROTECTION SYSTEM IS TO REMAIN DEACTIVATED AT THE END OF THE WORK DAY UNLESS AGREED TO WITH THE PROPERTY OWNER, AND A SUITABLE FIRE PROTECTION SCHEME SUCH AS A MANNED FIRE WATCH, HAS BEEN IMPLEMENTED AND APPROVED BY THE OWNER. IT IS THE CONTRACTOR'S RESPONSIBILITY TO SEE THAT ALL FIRE PROTECTION SYSTEMS ARE FILLED, AND THE SYSTEM FUNCTIONAL BEFORE COMPLETING HIS WORK DAY.

D. CENTER SPRINKLER HEADS IN CEILING TILES WHENEVER POSSIBLE, DEPENDENT UPON SPACING AND COORDINATION WITH CEILING ELEMENTS. ALL HEADS VISIBLE WITHIN A ROOM OR CEILING AREA SHALL BE OF THE SAME SPECIFICATION AND APPEARANCE.

E. ENSURE REQUIRED DEVICES ARE INSTALLED AND CONNECTED AS REQUIRED TO FIRE ALARM SYSTEM.

F. COORDINATE PIPING WITH STRUCTURAL, MECHANICAL PIPING AND DUCTWORK, AND ELECTRICAL WITHIN THE BUILDING. PIPING CONFLICTS BETWEEN SYSTEM SHALL BE REMOVED AND REPLACED AT NO COST TO THE OWNER.

G. CONDUCT ALL APPLICABLE TESTS AS REFERENCED IN NFPA STANDARD 13. ALL NECESSARY TESTS SHALL BE CONDUCTED IN CONFORMANCE WITH REQUIREMENTS OF NFPA.

H. WIRING FOR FLOW SWITCHES, VALVE SUPERVISORY SWITCHES, SUPERVISORY PRESSURE SWITCHES, AND POWER TO AIR COMPRESSORS WILL BE PROVIDED UNDER DIVISION 26. COORDINATE LOCATION OF THESE DEVICES WITH THE ELECTRICAL CONTRACTOR.

SECTION 22 30 00 - PLUMBING FIXTURES AND EQUIPMENT

A. MANUFACTURERS: AS INDICATED IN THE DRAWINGS

B. INSULATION KITS: TRUEBRO, BROCAR, PLUMBEREX SPECIALTY PRODUCTS.

C. RECEPTORS (ROOF/FLOOR DRAINS, FLOOR SINKS, ETC.) JOSAM, J.R. SMITH, WADE, ZURN.

D. FLOOR/WALL CLEANOUTS: JOSAM, J.R. SMITH, WADE, ZURN.

E. PROVIDE BRACKETS, BRACES OR REINFORCING ANGLES AS REQUIRED IN ALL PARTITIONS NOT SUFFICIENT IN THEMSELVES TO SUPPORT PLUMBING FIXTURES OR OTHER WALL–HUNG EQUIPMENT.

F. INSTALL EACH FIXTURE WITH CHROME PLATED, 17 GA. TUBING TRAP WITH CLEANOUT, EASILY REMOVABLE FOR SERVICING AND CLEANING.

G. INSTALL COMPONENTS LEVEL, PLUMB AND SECURE.

H. INSTALL AND SECURE FIXTURES IN PLACE WITH WALL CARRIERS AND BOLTS.

I. SEAL FIXTURES TO WALL AND FLOOR SURFACES WITH SEALANT, COLOR TO MATCH FIXTURE.

J. MOUNT LEVER CONTROL FOR HANDICAPPED WATER CLOSETS ON WIDE SIDE OF TOILET STALL.

K. INSULATE WASTE AND SUPPLIES FOR ALL HANDICAPPED FIXTURES.

L. ROUGH–IN FIXTURE PIPING CONNECTIONS IN ACCORDANCE WITH MINIMUM SIZES INDICATED IN PLUMBING FIXTURE SCHEDULE ON DRAWINGS.

M. REVIEW MILLWORK SHOP DRAWINGS. CONFIRM LOCATION AND SIZE OF FIXTURES AND OPENINGS BEFORE ROUGH–IN AND INSTALLATION.

N. EXPOSED WATER PIPING CHROME PLATED BRASS.

O. PROVIDE SHUT OFF VALVE AND SOLENOID VALVE IN GAS PIPING TO EACH PIECE OF GAS EQUIPMENT.

P. PROVIDE TRANSFORMERS WHERE REQUIRED. TRANSFORMERS TO BE INSTALLED BY DIVISION 26 00 00. POWER TO TRANSFORMERS BY DIVISION 26 00 00.

Q. PROVIDE SENSORS WHERE REQUIRED. WIRING FROM SENSORS TO TRANSFORMERS AND SENSORS TO OPERATORS BY DIVISION 23.

SECTION 23 80 00 - HVAC EQUIPMENT

A. BROWN SHOE APPROVED MANUFACTURER: CARRIER (PREFERRED) ALTERNATES PENDING SUBMITTAL TO BROWN SHOE: LENNOX, YORK, TRANE (UNIT TO BE R410A)

B. CABINET:
1. CONSTRUCTION: HEAVY GAGE GALVANIZED STEEL WITH ACRYLIC LACQUER FINISH, STAINLESS STEEL FASTENERS, AND SHALL HAVE VINYL COATED FAN GUARDS. THE CABINET SHALL BE THERMALLY INSULATED WITH 1" THICK, 1 1/2 LB. DENSITY GLASS FIBER INSULATION.
2. FINISH: MANUFACTURER'S STANDARD FINISH
3. CABINET ACCESS PANELS: COMPRESSOR/CONTROLS/HEATING AREA ACCESS PANELS, BLOWER ACCESS PANEL AND AIR FILTER/ECONOMIZER ACCESS PANEL HINGED WITH TOOL–LESS ACCESS HANDLES, GASKETS ON ALL EDGES FOR TIGHT SEAL, FILTER AND BLOWER ACCESS PANELS HAVE STEEL PANEL INNER LINER WITH INSULATION SANDWICHED IN–BETWEEN.
4. ROOF MOUNTING CURB: FURNISH AND INSTALL A STEEL ROOF MOUNTING FRAME FOR BOTTOM DISCHARGE AND RETURN AIR DUCT CONNECTION. IT SHALL MATE TO BOTTOM PERIMETER OF THE EQUIPMENT. WHEN FLASHED INTO THE ROOF IT SHALL MAKE A UNIT MOUNTING CURB AND PROVIDE A WEATHERPROOF DUCT CONNECTION AND ENTRY INTO THE CONDITIONED AREA.

C. FANS AND MOTORS:

1. SUPPLY FAN: CENTRIFUGAL SUPPLY AIR BLOWER SHALL HAVE BALL BEARINGS AND ADJUSTABLE BELT DRIVE. BLOWER ASSEMBLY SHALL SLIDE OUT OF UNIT FOR SERVICING. BLOWER WHEEL SHALL BE STATICALLY AND DYNAMICALLY BALANCED.
2. CONDENSER FAN: DIRECT DRIVE PROPELLER TYPE CONDENSER FANS SHALL DISCHARGE VERTICALLY.
3. POWER EXHAUST FANS: SHALL BE AVAILABLE FOR ALL MODELS WITH ECONOMIZER. FANS SHALL EXHAUST AIR THROUGH GRAVITY EXHAUST DAMPERS.

D. COILS

1. AIR COILS: THE EVAPORATOR AND CONDENSER COILS SHALL BE NON–FERROUS CONSTRUCTION WITH ALUMINUM FINS MECHANICALLY BONDED TO DURABLE COPPER TUBES. EVAPORATOR COIL CONDENSATE DRAIN SHALL BE EXTENDED OUTSIDE OF THE CABINET. CERTIFY CAPACITIES, PRESSURE DROPS, AND SELECTION PROCEDURES IN ACCORDANCE WITH ARI 410.
2. FOR COASTAL LOCATIONS (WITHIN 10 MILES OF COAST) COILS ARE TO BE COATED WITH A PROTECTIVE TREATMENT SUCH AS MICROGUARD BY ADSIL, OR EQUAL.

E. FILTERS: DISPOSABLE 2 INCH THICK PLEATED MEDIA.

F. ECONOMIZER

1. ECONOMIZER SECTION: FURNISH AND INSTALL ECONOMIZER COMPLETE WITH RETURN AIR DAMPERS, OUTSIDE AIR DAMPERS AND CONTROLS. THE ECONOMIZER SECTION SHALL PROVIDE FOR THE INTRODUCTION OF OUTDOOR AIR FOR MINIMUM VENTILATION AND FREE COOLING. DAMPER ACTUATOR SHALL BE OPPOSING GEAR DRIVEN WITH A FULLY MODULATING DESIGN.

G. DAMPERS

1. OUTSIDE AIR DAMPERS: DAMPERS SHALL BE CONSTRUCTED OF EXTRUDED ALUMINUM, HOLLOW CORE, AIR FOIL BLADES WITH RUBBER EDGE SEALS AND ALUMINUM END SEALS. DAMPERS SHALL BE DESIGNED TO OPERATE FROM 0–100%. DAMPER BLADES SHALL BE GEAR DRIVEN AND DESIGNED TO HAVE NO MORE THAN 25 CFM OF LEAKAGE PER SQUARE FOOT OF DAMPER AREA WHEN SUBJECTED TO 2" WG AIR PRESSURE DIFFERENTIAL ACROSS THE DAMPER. DAMPER MOTOR SHALL BE SPRING RETURN TO INSURE CLOSING OF OUTDOOR AIR DAMPER DURING PERIODS OF UNIT SHUT DOWN OR POWER FAILURE.
2. RETURN AIR DAMPERS: DAMPERS SHALL BE CONSTRUCTED OF EXTRUDED ALUMINUM, HOLLOW CORE, AIR FOIL BLADES WITH RUBBER EDGE SEALS AND ALUMINUM END SEALS. DAMPER BLADES SHALL BE GEAR DRIVEN AND DESIGNED TO HAVE NO MORE THAN 25 CFM OF LEAKAGE PER SQUARE FOOT OF DAMPER AREA WHEN SUBJECTED TO 2" WG AIR PRESSURE DIFFERENTIAL ACROSS THE DAMPER
3. GRAVITY RELIEF DAMPERS: PRESSURE OPERATED DAMPERS MADE OF EXTRUDED ALUMINUM SHALL PREVENT BLOW–BACK AND OUTDOOR AIR INFILTRATION DURING OFF CYCLE.

H. GAS FIRED HEATER

1. INDIRECT GAS FIRED [DIRECT FIRED] HEATER TYPE: UNIT SHALL HEAT USING NATURAL GAS FUEL WITH A MINIMUM TWO STAGES OF CAPACITY [SINGLE STAGE OF HEAT CAPACITY]. UNIT SHALL BE PROVIDED WITH A GAS HEATING FURNACE CONSISTING OF AN ALUMINIZED STEEL TUBULAR HEAT EXCHANGER [STAINLESS STEEL TUBULAR HEAT EXCHANGER], AND INDUCED DRAFT BLOWER AND AN ELECTRIC PRESSURE SWITCH [DIFFERENTIAL PRESSURE SWITCH] TO LOCKOUT THE GAS VALVE UNTIL THE COMBUSTION CHAMBER IS PURGED AND COMBUSTION AIR FLOW IS ESTABLISHED. UNIT SHALL BE PROVIDED WITH A GAS IGNITION SYSTEM CONSISTING OF AN ELECTRONIC IGNITOR TO A PILOT SYSTEM, WHICH WILL BE CONTINUOUS WHEN THE HEATER IS OPERATING, BUT WILL SHUT OFF THE PILOT WHEN HEATING IS NOT REQUIRED [ELECTRONIC IGNITION SYSTEM WHICH WILL DE–ENERGIZE UPON FLAME DETECTION]. UNIT SHALL HAVE GAS SUPPLY PIPING ENTRANCES IN THE UNIT BASE FOR THROUGH THE CURB GAS PIPING. REFER TO SCHEDULE ON DRAWINGS

I. ELECTRIC HEATER COIL

1. HEATER SHALL BE PROVIDED WITH HELIX WOUND NICHROME ELEMENTS [OPEN WIRE TYPE ELEMENTS], CONTACTORS, FUSING WIRED FOR TWO STAGES OF CAPACITY CONTROL. PROVIDE A RESETTABLE HIGH TEMPERATURE LIMIT SWITCH AND CAPACITIES AS SHOWN ON THE SCHEDULE.

J. COMPRESSOR

1. MULTIPLE COMPRESSORS SHALL BE RESILIENTLY MOUNTED, HAVE OVERLOAD PROTECTION AND CRANKCASE HEATERS. REFER TO SECTION 23 61 00 AND SCHEDULE ON DRAWINGS.
2. PROVIDE STEP CAPACITY CONTROL BY [HOT GAS BY–PASS.] [CYCLING COMPRESSORS.] [CYLINDER UNLOADING.] [CYCLING MULTI–SPEED COMPRESSORS.]

K. AIR COOLED CONDENSER

1. DIRECT DRIVE PROPELLER TYPE CONDENSER FANS SHALL DISCHARGE VERTICALLY. FAN MOTOR SHALL HAVE BALL BEARINGS AND BE PERMANENTLY LUBRICATED AND INHERENTLY PROTECTED. FANS SHALL HAVE A SAFETY GUARD. THE REFRIGERATION SYSTEM SHALL HAVE DISCHARGE, SUCTION AND LIQUID LINE GAUGES, HIGH PRESSURE SWITCHES, LOW PRESSURE SWITCHES, DRYERS, A FREEZESTAT AND FULL REFRIGERANT CHARGE. REFER TO SCHEDULE ON DRAWINGS.
2. PROVIDE [REFRIGERANT PRESSURE SWITCHES] [OUTDOOR THERMOSTAT] TO CYCLE CONDENSER FANS

SECTION 23 31 00 - DUCTWORK

A. PERFORM WORK IN ACCORDANCE WITH MANUFACTURER'S INSTRUCTIONS AND SMACNA – HVAC DUCT CONSTRUCTION STANDARDS – METAL AND FLEXIBLE, UNLESS MORE STRINGENT REQUIREMENTS ARE NOTED IN LOCAL CODES.

B. GALVANIZED STEEL DUCTS: ASTM A525 AND ASTM A527 GALVANIZED STEEL SHEET, LOCK–FORMING QUALITY, HAVING G60 ZINC COATING OF IN CONFORMANCE WITH ASTM A90.

C. STEEL DUCTS: ASTM A366.

D. ALUMINUM DUCTS: ASTM B209; ALUMINUM SHEET, ALLOY 3003–H14. ALUMINUM CONNECTORS AND BAR STOCK: ALLOY 6061– T6 OR OF EQUIVALENT STRENGTH.

E. INSULATED FLEXIBLE DUCTS:

1. MANUFACTURERS: FLEX–AIRE, FLEXMASTER, NORFLEX, THERMAFLEX, WIREMOLD.
2. TWO PLY VINYL FILM SUPPORTED BY HELICALLY WOUND SPRING STEEL WIRE; FIBERGLASS INSULATION; POLYETHYLENE VAPOR BARRIER FILM. PRESSURE RATING: 10 INCHES WG POSITIVE AND 1.0 INCHES WG NEGATIVE. MAXIMUM VELOCITY: 4000 FPM. TEMPERATURE RANGE: –10 DEGREES F TO 160 DEGREES F.

F. MANUFACTURERS OF FLAT OVAL DUCTS, DOUBLE WALL INSULATED FLAT OVAL DUCTS, DOUBLE WALL INSULATED ROUND DUCTS: SEMCO, UNITED MCGILL

G. MANUFACTURERS OF TRANSVERSE DUCT CONNECTION SYSTEM: DUCTMATE, TDC, WARD.

H. INSTALLATION – GENERAL:

1. SUPPORT DUCTWORK IN ACCORDANCE WITH SMACNA HVAC DUCT CONSTRUCTION STANDARDS – METAL AND FLEXIBLE, CHAPTER 4, HANGERS AND SUPPORTS.
2. PROVIDE FIRESTOP SYSTEMS FOR PIPE AND DUCT THROUGH–PENETRATIONS OF FIRE–RESISTANCE–RATED ASSEMBLIES.
3. DUCT HANGERS SHALL NOT ATTACH TO BOTTOM CHORD OF STEEL JOIST OR METAL ROOF DECKING. ATTACH TO TOP CHORD OF STEEL JOIST.
4. CONNECT DIFFUSERS OR LIGHT TROFFER BOOTS TO LOW PRESSURE DUCTS DIRECTLY OR WITH 3 FEET MAXIMUM LENGTH OF FLEXIBLE DUCT HELD IN PLACE WITH STRAP OR CLAMP.

I. PROTECTION: DURING CONSTRUCTION, PROVIDE TEMPORARY CLOSURES OF METAL OR TAPED POLYETHYLENE ON OPEN DUCTWORK TO PREVENT CONSTRUCTION DUST FROM ENTERING DUCTWORK SYSTEM.

J. CLEANING:

1. CLEAN DUCT SYSTEM AND FORCE AIR AT HIGH VELOCITY THROUGH DUCT TO REMOVE ACCUMULATED DUST. TO OBTAIN SUFFICIENT AIR, CLEAN HALF THE SYSTEM AT A TIME. PROTECT EQUIPMENT WHICH MAY BE HARMED BY EXCESSIVE DIRT WITH TEMPORARY FILTERS, OR BYPASS DURING CLEANING.
2. CLEAN DUCT SYSTEMS WITH HIGH POWER VACUUM MACHINES. PROTECT EQUIPMENT WHICH MAY BE HARMED BY EXCESSIVE DIRT WITH FILTERS, OR BYPASS DURING CLEANING.

SECTION 23 33 00 - DUCTWORK ACCESSORIES

A. FIRE AND SMOKE DAMPERS:

1. MANUFACTURERS: CESCO, GREENHECK, NAILOR, POTTORFF, PREFCO, RUSKIN, SAFE–AIR.
2. FABRICATE IN ACCORDANCE WITH NFPA 90A, UL 555, UL 555S, LEAKAGE CLASS II, AND AS INDICATED.
3. ACTUATORS: UL LISTED AND LABELED SPRING RETURN [PNEUMATIC TYPE SUITABLE FOR OPERATION ON 0–20 PSIG INSTRUMENT AIR.] [ELECTRIC TYPE SUITABLE FOR 120 VOLTS, SINGLE PHASE, 60 HZ.] [ELECTRIC TYPE SUITABLE FOR 24 VOLTS, DC.] [PROVIDE END SWITCHES TO INDICATE DAMPER POSITION.] LOCATE DAMPER OPERATOR ON [INTERIOR] [EXTERIOR] OF DUCT AND LINK TO DAMPER OPERATING SHAFT. PROVIDE FOR TESTING OR RESETTING [AT DAMPER] [FROM REMOTE LOCATION].

B. PROVIDE BACKDRAFT DAMPERS ON EXHAUST FANS OR EXHAUST DUCTS NEAREST TO OUTSIDE AND WHERE INDICATED.

SECTION 23 34 00 - FANS

A. VENT FANS. MANUFACTURERS: COOK, ACME, GREENHECK, TRANE, TWIN CITY FAN.

B. POWER VENTILATORS. MANUFACTURERS: COOK, ACME, GREENHECK, JENN–AIR, TWIN CITY FAN.

C. INSTALL ACCORDING TO MANUFACTURER'S INSTRUCTIONS.

SECTION 23 37 00 - AIR OUTLETS AND INLETS

A. GRILLES, REGISTERS AND DIFFUSERS:

1. MANUFACTURERS: ANEMOSTAT, KRUEGER, METALAIRE, NAILOR, PRICE, TITUS, TUTTLE & BAILEY. COLOR TO BE WHITE.

B. LOUVERS

1. LOUVER BY OTHERS AMERICAN WARMING AND VENTILATING.
2. MANUFACTURERS: AMERICAN WARMING AND VENTILATING, ARROW UNITED, CESCO, GREENHECK, LOUVERS AND DAMPERS, RUSKIN.

C. GRAVITY ROOF VENTILATOR MANUFACTURERS:

1. MANUFACTURERS: COOK, GREENHECK, PENN.

D. GOOSENECKS

1. FABRICATE IN ACCORDANCE WITH SMACNA HVAC DUCT CONSTRUCTION STANDARDS – METAL AND FLEXIBLE, OF MINIMUM 18 GAGE GALVANIZED STEEL.
2. MOUNT ON MINIMUM 12 INCH HIGH CURB BASE WHERE SIZE EXCEEDS 9 X 9 INCH.

SECTION 23 05 00 - TESTING, ADJUSTING, AND BALANCING

A. WORK INCLUDES

1. TESTING, ADJUSTMENT, AND BALANCING OF [NEW] [AND EXISTING] AIR SYSTEMS, HYDRONIC SYSTEMS, STEAM SYSTEMS, AND REFRIGERATION SYSTEMS.
2. MEASUREMENT OF FINAL OPERATING CONDITION OF HVAC SYSTEMS.

B. SERVICES PROVIDED BY QUALIFIED PERSONNEL OF MECHANICAL CONTRACTOR OR INDEPENDENT QUALIFIED TESTING AND BALANCING AGENCY.

C. PERFORM TOTAL SYSTEM BALANCE IN ACCORDANCE WITH AABC NATIONAL STANDARDS FOR FIELD MEASUREMENT AND INSTRUMENTATION, TOTAL SYSTEM BALANCE OR NEBB PROCEDURAL STANDARDS FOR TESTING, BALANCING AND ADJUSTING OF ENVIRONMENTAL SYSTEMS.

D. VERIFY THAT SYSTEMS ARE COMPLETE AND OPERABLE BEFORE COMMENCING WORK.

E. AIR HANDLING SYSTEMS: ADJUST TO WITHIN PLUS OR MINUS 5 PERCENT OF DESIGN FOR SUPPLY SYSTEMS AND PLUS OR MINUS 10 PERCENT OF DESIGN FOR RETURN AND EXHAUST SYSTEMS. ADJUST OUTSIDE AIR TO WITHIN 0 TO PLUS 10 PERCENT OF DESIGN.

F. AIR OUTLETS AND INLETS: ADJUST TOTAL TO WITHIN PLUS 10 PERCENT AND MINUS 5 PERCENT OF DESIGN TO SPACE. ADJUST OUTLETS AND INLETS IN SPACE TO WITHIN PLUS OR MINUS 10 PERCENT OF DESIGN.

G. HYDRONIC SYSTEMS: ADJUST TO WITHIN PLUS OR MINUS 5 PERCENT OF DESIGN.

H. ADJUST AIR HANDLING AND DISTRIBUTION SYSTEMS TO PROVIDE REQUIRED OR DESIGN SUPPLY, RETURN, OUTSIDE AIR, AND EXHAUST AIR QUANTITIES.

I. TEST EXISTING SUPPLY, RETURN AND EXHAUST SYSTEMS TO BE MODIFIED PRIOR TO CONSTRUCTION. RESET EXISTING BRANCHES SERVING AREAS OF NO WORK TO CONDITIONS PRIOR TO CONSTRUCTION. BALANCE BRANCHES SERVING REMODELED AREAS, TO NEW CONDITIONS.

J. ADJUST WATER SYSTEMS TO PROVIDE REQUIRED OR DESIGN QUANTITIES.

K. TEST EXISTING WATER SYSTEMS TO BE MODIFIED PRIOR TO CONSTRUCTION. RESET EXISTING BRANCHES SERVING AREAS OF NO WORK TO CONDITIONS PRIOR TO CONSTRUCTION. BALANCE BRANCHES SERVING REMODELED AREAS, TO NEW CONDITIONS.

SECTION 26 00 00 - GENERAL PROVISIONS

A. WORK CONSISTS OF FURNISHING LABOR, MATERIALS, EQUIPMENT AND SERVICES REQUIRED FOR THE COMPLETE INSTALLATION OF ELECTRICAL WORK SHOWN IN THE CONTRACT DOCUMENTS AND SPECIFIED IN DIVISION 26.

B. INCLUDE ALL PARTS AND LABOR, WHICH ARE INCIDENTAL AND NECESSARY FOR A COMPLETE AND OPERABLE INSTALLATION EVEN THOUGH NOT SPECIFICALLY MENTIONED IN THE CONTRACT DOCUMENTS. SUCH ITEMS INCLUDE NUTS, BOLTS, ANCHORS, BRACKETS, SLEEVES, OFFSETS IN CONDUIT, FITTINGS, RELAYS, ETC.

C. ARRANGE WITH LANDLORD TO PROVIDE TEMPORARY AND PERMANENT UTILITY SERVICES AS REQUIRED AND COORDINATE THEIR INSTALLATION WITH CONSTRUCTION PROGRESS OF THIS PROJECT. PAY ALL FEES AND COSTS CHARGED BY UTILITY COMPANIES FOR UTILITY SERVICES.

D. OBTAIN ALL TEMPORARY AND PERMANENT PERMITS AND LICENSES REQUIRED IN CONNECTION WITH THIS DIVISION'S WORK. PAY ALL FEES AND EXPENSES REQUIRED FOR SUCH PERMITS AND LICENSES.

E. REQUEST INSPECTIONS AS REQUIRED BY REGULATING AGENCIES AND/OR REGULATIONS. PAY ALL CHARGES FOR INSPECTIONS BY REGULATING AGENCIES OF INSTALLATIONS OF PLANS AND SPECIFICATIONS.

F. INCLUDE STATE AND LOCAL SALES TAXES IN THE BID. KEEP ACCURATE RECORDS OF THESE TAXES AND FURNISH SUCH RECORDS TO THE TENANT UPON REQUEST.

G. MEET OR EXCEED ALL CURRENT APPLICABLE CODES, ORDINANCES AND REGULATIONS FOR ALL INSTALLATIONS. PROMPTLY NOTIFY THE ENGINEER, IN WRITING, IF THE CONTRACT DOCUMENTS APPEAR TO CONFLICT WITH GOVERNING CODES AND REGULATIONS. CONTRACTOR ASSUMES ALL RESPONSIBILITY AND COSTS FOR CORRECTING NON–COMPLYING WORK INSTALLED WITHOUT NOTIFYING THE ENGINEER.

H. HIGHER QUALITY OF WORKMANSHIP AND MATERIALS INDICATED IN THE CONTRACT DOCUMENTS TAKES PRECEDENCE OVER THAT ALLOWED IN REFERENCED CODES AND STANDARDS.

I. THE TERMS DEFINED BELOW APPLY TO ALL WORK INCLUDED IN DIVISION 26 00 00.

1. THE TERM 'WORK' MEANS THE CONSTRUCTION AND SERVICES REQUIRED BY THE CONTRACT DOCUMENTS AND INCLUDES ALL OTHER LABOR, MATERIALS, EQUIPMENT AND SERVICES PROVIDED OR TO BE PROVIDED BY THE CONTRACTOR TO FULFILL THE CONTRACTOR'S OBLIGATIONS.
2. FURNISH – TO OBTAIN IN NEW CONDITION READY FOR INSTALLATION INTO THE WORK.
3. INSTALL – TO STORE, SET IN PLACE, CONNECT AND PLACE INTO OPERATION INTO THE WORK
4. PROVIDE – TO FURNISH AND INSTALL.
5. CONNECT – TO BRING SERVICE TO THE EQUIPMENT AND MAKE FINAL ATTACHMENT INCLUDING NECESSARY SWITCHES, OUTLETS, BOXES, TERMINATIONS, ETC.
6. CONDUIT – INCLUDES IN ADDITION TO CONDUIT, ALL FITTINGS, PULL BOXES, HANGERS AND OTHER SUPPORTS AND ACCESSORIES RELATED TO SUCH CONDUIT.
7. CONCEALED – HIDDEN FROM SIGHT IN CHASES, FURRED SPACES, SHAFTS, HUNG CEILINGS, EMBEDDED IN CONSTRUCTION, IN CRAWL SPACES OR BURIED.
8. EXPOSED: NOT INSTALLED UNDERGROUND NOR CONCEALED AS DEFINED ABOVE.

J. THE DRAWING AND SPECIFICATIONS CONSTITUTE THE CONTRACT DOCUMENTS. ANY ITEM NOTED IN THE SPECIFICATION OR SHOWN ON THE DRAWINGS IS INCLUDED IN THE CONTRACT DOCUMENTS.

K. ALL ELECTRICAL DETAILS AND DRAWINGS ARE DIAGRAMMATIC, UNLESS SPECIFICALLY NOTED. FIELD VERIFY ALL DIMENSIONS AND NOTIFY THE ENGINEER OF ANY CONFLICTS OR DISCREPANCIES, IN WRITING, PRIOR TO INSTALLATION.

L. INITIATE, MAINTAIN AND SUPERVISE ALL SAFETY PRECAUTIONS REQUIRED WITH THIS WORK IN ACCORDANCE WITH THE REGULATIONS OF THE OCCUPATIONAL SAFETY AND HEALTH ADMINISTRATION (OSHA) AND OTHER GOVERNING AGENCIES.

M. DO NOT REMOVE OR DISTURB ANY ASBESTOS CONTAINING MATERIALS FROM THE PROJECT. IMMEDIATELY STOP WORK AND NOTIFY THE TENANT IF ASBESTOS CONTAINING MATERIALS ARE SUSPECTED.

N. BEFORE SUBMITTING A PROPOSAL ON THE WORK CONTEMPLATED, EXAMINE THE SITE OF THE PROPOSED WORK AND BECOME THOROUGHLY FAMILIAR WITH EXISTING CONDITIONS AND LIMITATIONS. NO EXTRA COMPENSATION WILL BE ALLOWED BECAUSE OF MISUNDERSTANDING AS TO THE AMOUNT OF WORK INVOLVED NOR BIDDERS LACK OF KNOWLEDGE OF EXISTING CONDITIONS WHICH COULD HAVE BEEN DISCOVERED OR REASONABLY ANTICIPATED PRIOR TO BIDDING.

O. CONDUITS, PIPES, DUCTS, LIGHTS, DEVICES, SPEAKERS, ETC., SHOWN ON THE DRAWINGS AS EXISTING HAVE BEEN BASED ON EXISTING PLANS AND MAY NOT BE INSTALLED AS ORIGINALLY SHOWN. IT IS THE CONTRACTORS RESPONSIBILITY TO VISIT THE SITE AND MAKE EXACT DETERMINATION OF THE EXISTENCE, LOCATION AND CONDITION OF SUCH FACILITIES PRIOR TO SUBMITTING A BID.

P. CONSULT THE DRAWINGS AND SPECIFICATIONS OF MECHANICAL AND OTHER TRADES FOR CORRELATING INFORMATION AND LAY OUT WORK SO THAT IT WILL COORDINATE WITH OTHER TRADES. VERIFY DIMENSIONS AND CONDITIONS (I.E., FINISHED CEILING HEIGHTS, FOOTING AND FOUNDATION ELEVATIONS, BEAM DEPTHS, ETC.) WITH THE ARCHITECTURAL AND STRUCTURAL DRAWINGS. NOTIFY THE ARCHITECT/ENGINEER OF ANY CONFLICTS THAT CANNOT BE RESOLVED, IN THE FIELD, BY AFFECTED TRADES. REPLACEMENT OF WORK DUE TO LACK OF COORDINATION AND FAILURE TO VERIFY EXISTING CONDITIONS WILL BE COMPLETED AT NO COST TO THE TENANT.

BROWN SHOE COMPANY, INC.
8300 Maryland Ave.
Clayton, MO 63105
314/854-4000
BROWN SHOE COMPANY

09/15/2014	BID & PERMIT
09/26/2014	2 LANDLORD COMMENTS

TRICARICO®
Tricarico Architecture and Design PC
502 Valley Road Wayne, NJ 07470
T (973) 692-0222 F (973) 692-0223
www.tricarico.com

PROHIBITION ON REUSE: INFORMATION CONTAINED IN THESE DRAWINGS AND SPECIFICATIONS WAS PREPARED FOR USE ON THE SPECIFIC SITE INDICATED. USE OF THIS INFORMATION ON ANOTHER PROJECT IS PROHIBITED AND CONTRARY TO LAW UNLESS EXPRESSLY AUTHORIZED IN WRITING BY THE AUTHOR.

THESE DRAWINGS AND SPECIFICATIONS ARE AND SHALL REMAIN THE PROPERTY OF THE BROWN SHOE, INC. DISPLAY, REPRODUCTION, OR USE FOR ANY BUT THE SPECIFICALLY AGREED UPON PURPOSES, WITHOUT THE WRITTEN AUTHORIZATION OF BROWN SHOE, INC. IS STRICTLY PROHIBITED.

COPYRIGHT NOTICE: THESE DRAWINGS AND SPECIFICATIONS ARE SUBJECT TO COPYRIGHT PROTECTION AS AN "ARCHITECTURAL WORK" UNDER SEC. 102 OF THE COPYRIGHT ACT, 17 U.S.C. AS AMENDED DECEMBER 1990; KNOWN AS THE ARCHITECTURAL WORKS COPYRIGHT PROTECTION ACT OF 1990. THE PROTECTION INCLUDES, WITHOUT LIMITATION, THE OVERALL FORM, ARRANGEMENT, AND COMPOSITION OF SPACES AND ELEMENTS OF THE DESIGN.

FAMOUS footwear
STORE #3406
NORTH POINT MALL
1000 NORTH POINT CIR SUITE 2208
ALPHARETTA, GA 30022

DESIGNED BY:	BF
DRAWN BY:	
CHECKED BY:	
DATE:	09/26/14
PROTO. VER.:	010413
PROJECT NO:	140341

SPECIFICATIONS

SP-3

COPYRIGHT ©2014 BY BROWN SHOE, INC. PROTOTYPE VERSION: 010413

Q. INSTALL ALL CONDUIT, CABLE TRAY, BUSDUCT, EQUIPMENT, ETC. ALLOWING PROPER CODE AND MAINTENANCE CLEARANCES AND TO AVOID BLOCKING PASSAGEWAYS AND ACCESS PANELS.

R. WHERE WORK MUST BE REPLACED DUE TO THE FAILURE OF THE CONTRACTOR TO VERIFY THE CONDITIONS EXISTING ON THE JOB, SUCH REPLACEMENT MUST BE ACCOMPLISHED AT NO COST TO THE TENANT. THIS APPLIES TO SHOP FABRICATED WORK AS WELL AS TO WORK FABRICATED IN PLACE.

S. THROUGHOUT THE COURSE OF THE WORK, MINOR CHANGES AND ADJUSTMENTS TO THE INSTALLATION MAY BE REQUESTED BY THE ENGINEER. THE CONTRACTOR SHALL MAKE ADJUSTMENTS WITHOUT ADDITIONAL COST TO THE TENANT, WHERE SUCH ADJUSTMENTS ARE NECESSARY TO THE PROPER INSTALLATION AND OPERATION WITHIN THE INTENT OF THE CONTRACT DOCUMENTS. THIS DOES NOT INCLUDE WORK ALREADY COMPLETED.

T. OBTAIN EXACT LOCATION OF CONNECTION TO EQUIPMENT, FURNISHED BY OTHERS, FROM THE PERSON FURNISHING THE EQUIPMENT.

U. DRAWINGS AND SPECIFICATIONS ARE COMPLEMENTARY AND WHAT IS CALLED FOR IN EITHER ONE IS AS BINDING AS IF CALLED FOR IN BOTH.

V. INCLUDE THE BETTER QUALITY, GREATER QUANTITY OR HIGHER COST FOR AN ITEM OR ARRANGEMENT WHERE A DISAGREEMENT EXISTS IN THE DRAWINGS AND SPECIFICATIONS.

W. GUARANTEE AND MAINTAIN THE STABILITY OF WORK AND MATERIALS AND KEEP SAME IN PERFECT REPAIR AND CONDITION FOR THE PERIOD OF ONE (1) YEAR AFTER THE FINAL COMPLETION OF THE WORK.

X. DEFECTS OF ANY KIND DUE TO FAULTY WORK OR MATERIALS APPEARING DURING THE ABOVE MENTIONED PERIOD MUST BE IMMEDIATELY MADE GOOD BY THE CONTRACTOR AT HIS OWN EXPENSE TO THE ENTIRE SATISFACTION OF THE TENANT AND ARCHITECT AND ENGINEER. INCLUDE DAMAGE TO THE FINISH OR THE BUILDING RESULTING FROM THE ORIGINAL DEFECT OR REPAIRS.

Y. REPLACE ALL RECEPTACLES, SWITCHES, COVERPLATES, ETC., DAMAGED BY ANY CONTRACTOR DURING THE COURSE OF CONSTRUCTION.

Z. MATERIALS FURNISHED FOR THE TEMPORARY LIGHT AND POWER SYSTEM REMAIN CONTRACTORS PROPERTY. REMOVE WHEN THERE IS NO LONGER ANY NEED FOR TEMPORARY LIGHT AND POWER.

AA. COORDINATE/SCHEDULE ALL WORK WITH THE TENANT TO MINIMIZE ANY DISRUPTIONS. CONFINE ALL INTERRUPTIONS TO THE SMALLEST POSSIBLE AREA. PROVIDE TEMPORARY CONNECTIONS IF REQUIRED TO PROVIDE CONTINUITY OF SERVICE.

BB. INSPECT ALL AREAS AFFECTED BY THE INTERRUPTIONS AND RETURN ALL AUTOMATICALLY CONTROLLED EQUIPMENT, ELECTRICALLY OPERATED EQUIPMENT TO THE SAME OPERATING CONDITION PRIOR TO THE INTERRUPTION.

CC. NO FIRE ALARM SYSTEMS ARE TO REMAIN INACTIVE AT THE END OF THE WORK DAY. ASSURE THAT THE FIRE ALARM SYSTEM IS OPERATIONAL AT THE END OF EACH WORK DAY. COORDINATE WITH THE LANDLORD.

DD. DO NOT DISTURB NORMAL USE OF THE FACILITY, EXCEPT WITHIN THE IMMEDIATE CONSTRUCTION AREA. KEEP WALKS, DRIVEWAYS, ENTRANCES, ETC. FREE AND CLEAR OF EQUIPMENT, MATERIAL AND DEBRIS.

EE. STORE ALL EQUIPMENT AND MATERIAL IN A PLACE AND MANNER THAT MINIMIZES CONGESTION AND IS APPROVED BY THE TENANT.

FF. PROVIDE NEW MATERIAL AND EQUIPMENT, UNLESS NOTED OTHERWISE. PROTECT EQUIPMENT AND MATERIAL FROM DAMAGE, DIRT AND THE WEATHER.

GG. PROVIDE THE HIGHEST QUALITY WORKMANSHIP AND PERFORM ALL WORK ONLY BY SKILLED MECHANICS. INSTALL MATERIAL AND EQUIPMENT IN ACCORDANCE WITH MANUFACTURERS' RECOMMENDATIONS, INSTRUCTIONS AND CURRENT NECA STANDARDS.

HH. THE TENANT RESERVES THE RIGHT TO REJECT MATERIAL OR WORKMANSHIP NOT IN ACCORDANCE WITH THE SPECIFICATIONS, BEFORE OR AFTER INSTALLATION.

II. PERFORM ALL CUTTING AND PATCHING NECESSARY TO WORK, UNLESS SPECIFICALLY DELEGATED TO THE G.C.. OBTAIN SPECIAL PERMISSION FROM THE LANDLORD BEFORE CUTTING STRUCTURAL MEMBERS OR FINISHED MATERIAL. PERFORM ALL PATCHING IN SUCH A MANNER AS TO LEAVE NO VISIBLE TRACE AND RETURN THE AREA AFFECTED TO THE CONDITION OF UNDISTURBED WORK. PERFORM ALL PATCHING BY WORKERS EXPERIENCED, SKILLED, AND LICENSED FOR THE PARTICULAR TYPE OF WORK INVOLVED. INFERIOR WORK WILL NOT BE ACCEPTED.

JJ. PATCH ALL HOLES LEFT AS A RESULT OF DEMOLITION OF ELECTRICAL EQUIPMENT AND DEVICES.

KK. PREVENT THE SPREAD OF DUST, DEBRIS, AND OTHER MATERIAL INTO ADJACENT AREAS.

LL. REPLACE ALL CEILING TILES DAMAGED DURING INSTALLATION OF WORK, WITH NEW TILE.

MM. REFINISH ALL ELECTRICAL EQUIPMENT DAMAGED DURING SHIPPING AND/OR INSTALLATION TO ITS ORIGINAL CONDITION. REMOVE ALL RUST; PRIME, AND PAINT PER MANUFACTURER'S RECOMMENDATIONS FOR FINISH EQUAL TO ORIGINAL.

NN. PAINT ALL NEW RACEWAY SYSTEMS IN EXPOSED FINISHED AREAS.

OO. AFTER TESTS HAVE BEEN MADE AND ACCEPTED, CLEAN LIGHT FIXTURES, PANELS AND OTHER EQUIPMENT INSTALLED BY THE CONTRACTOR, LEAVING THE ENTIRE WORK AREA IN A CLEAN AND COMPLETE WORKING ORDER.

PP. OPERATE EQUIPMENT AND SYSTEMS IN ALL THEIR OPERATING MODES, TO VERIFY PROPER OPERATION, PRIOR TO FINAL INSPECTION AND OWNER INSTRUCTIONS. NOTIFY THE ENGINEER, IN WRITING, THAT ALL SYSTEMS HAVE BEEN TESTED AND ARE FUNCTIONING AND OPERATING PROPERLY

QQ. INCLUDE DOCUMENTATION OF INSTRUCTIONS IN THE OPERATION AND MAINTENANCE MANUALS.

RR. CONTRACTOR IS RESPONSIBLE FOR ANY DAMAGE TO ELECTRICAL EQUIPMENT OR MATERIALS UNTIL FINAL ACCEPTANCE OF THE ENTIRE PROJECT BY THE TENANT. KEEP ALL EQUIPMENT CLEAN MATERIALS UNTIL FINAL ACCEPTANCE OF THE ENTIRE PROJECT BY THE TENANT.

DEMOLITION

A. EXAMINE THE BUILDING TO DETERMINE ACTUAL CONDITIONS AND EXTENT OF WORK PRIOR TO BIDDING THE PROJECT. REFER ANY UNCLEAR DETAILS OR CONFLICTS TO THE ARCHITECT/ENGINEER FOR CLARIFICATION PRIOR TO BIDDING THE DRAWINGS.

B. VERIFY THAT FIELD MEASUREMENTS AND CIRCUITING ARRANGEMENTS ARE AS SHOWN ON DRAWINGS.

C. VERIFY THAT ABANDONED WIRING AND EQUIPMENT SERVE ONLY ABANDONED FACILITIES.

D. BEGINNING OF DEMOLITION MEANS INSTALLER ACCEPTS EXISTING CONDITIONS.

E. COORDINATE PHASING OF THE DEMOLITION WORK WITH THE CONSTRUCTION SEQUENCE SCHEDULE.

F. DISCONNECT ELECTRICAL SYSTEMS IN WALLS, FLOORS, AND CEILINGS SCHEDULED FOR REMOVAL.

G. COORDINATE UTILITY SERVICE OUTAGES WITH LANDLORD.

H. IDENTIFY EXISTING ELECTRICAL EQUIPMENT SUCH AS CONDUITS, BOXES, PULLBOXES, CONDUIT BODIES, AND CONDUIT RACKS THAT WILL NEED ADDITIONAL SUPPORT DUE TO THE DEMOLITION OF THE EXISTING SUPPORTS.

I. PROVIDE TEMPORARY WIRING AND CONNECTIONS TO MAINTAIN EXISTING SYSTEMS, INCLUDING TELEPHONE AND DATA SYSTEMS, IN SERVICE DURING CONSTRUCTION. WHEN WORK MUST BE PERFORMED ON ENERGIZED EQUIPMENT OR CIRCUITS, USE PERSONNEL EXPERIENCED IN SUCH OPERATIONS.

J. EXISTING ELECTRICAL SERVICE: MAINTAIN EXISTING SYSTEM IN SERVICE UNTIL NEW SYSTEM IS COMPLETE AND READY FOR SERVICE. DISABLE SYSTEM ONLY TO MAKE SWITCHOVERS AND CONNECTIONS. MINIMIZE OUTAGE DURATION. MAKE TEMPORARY CONNECTIONS TO MAINTAIN SERVICE IN AREAS ADJACENT TO WORK AREA.

K. EXISTING FIRE ALARM SYSTEM: MAINTAIN EXISTING SYSTEM IN SERVICE UNTIL NEW SYSTEM IS ACCEPTED. DISABLE SYSTEM ONLY TO MAKE SWITCHOVERS AND CONNECTIONS. NOTIFY AND OBTAIN PERMISSION FROM LANDLORD AND LOCAL FIRE SERVICE AT LEAST 24 HOURS BEFORE PARTIALLY OR COMPLETELY DISABLING SYSTEM. MINIMIZE OUTAGE DURATION. MAKE TEMPORARY CONNECTIONS TO MAINTAIN SERVICE IN AREA ADJACENT TO WORK AREA.

L. EXISTING TELEPHONE/DATA SYSTEM: MAINTAIN EXISTING SYSTEMS IN SERVICE UNTIL NEW SYSTEMS ARE COMPLETE AND READY FOR SERVICE AND ACCEPTED. DISABLE SYSTEMS ONLY TO MAKE SWITCHOVERS AND CONNECTIONS. NOTIFY AND OBTAIN PERMISSION FROM LANDLORD AND TELEPHONE UTILITY COMPANY AT LEAST 24 HOURS BEFORE PARTIALLY OR COMPLETELY DISABLING SYSTEM. MINIMIZE OUTAGE DURATION. MAKE TEMPORARY CONNECTIONS TO MAINTAIN SERVICE IN AREAS ADJACENT TO WORK AREA.

M. DEMOLISH AND EXTEND EXISTING ELECTRICAL WORK UNDER THIS SECTION, AND AS INDICATED ON THE DRAWINGS. REMOVE, RELOCATE, AND EXTEND EXISTING INSTALLATIONS TO ACCOMMODATE NEW CONSTRUCTION.

N. PROVIDE SUPPORTS FOR ALL EXISTING ELECTRICAL EQUIPMENT THAT WAS SUPPORTED PREVIOUSLY BY DEMOLISHED WALLS, FLOORS, CEILING OR OTHER STRUCTURES. PROVIDE NEW SUPPORTS FROM STRUCTURAL MEMBERS NOT SLATED FOR DEMOLITION, PRIOR TO ANY DEMOLITION.

O. TENANT RESERVES THE RIGHT OF FIRST REFUSAL TO OBTAIN MATERIAL SHOWN TO BE REMOVED UNDER THIS CONTRACT. ITEMS NOT RETAINED BY THE TENANT BECOME THE PROPERTY OF THE CONTRACTOR AND MUST BE REMOVED FROM THE PREMISES.

P. DEMOLISH AND REMOVE ALL ELECTRICAL SYSTEMS INDICATED FOR DEMOLITION. NO PORTION OF THESE SYSTEMS MAY BE ABANDONED IN PLACE.

Q. REMOVE ABANDONED WIRING TO SOURCE OF SUPPLY.

R. REMOVE EXPOSED ABANDONED CONDUIT, INCLUDING ABANDONED CONDUIT ABOVE ACCESSIBLE CEILING FINISHES. CUT CONDUIT IN WALLS, FLOORS, OR COLUMNS BACK TO A POINT WHERE PATCHING CAN BE ADEQUATELY PERFORMED AND PATCH SURFACES.

S. DISCONNECT ABANDONED OUTLETS AND REMOVE DEVICES. REMOVE ABANDONED OUTLETS IF CONDUIT SERVICING THEM IS ABANDONED AND REMOVED. PROVIDE BLANK COVER FOR ABANDONED OUTLETS, WHICH ARE NOT REMOVED.

T. DISCONNECT AND REMOVE ABANDONED PANELBOARDS AND DISTRIBUTION EQUIPMENT.

U. DISCONNECT AND REMOVE ELECTRICAL DEVICES AND EQUIPMENT SERVING UTILIZATION EQUIPMENT THAT HAS BEEN REMOVED.

V. DISCONNECT AND REMOVE ABANDONED LUMINARIES. REMOVE BRACKETS, STEMS, HANGERS, AND OTHER ACCESSORIES.

W. REPAIR ADJACENT CONSTRUCTION AND FINISHES DAMAGED DURING DEMOLITION AND EXTENSION WORK.

X. MAINTAIN ACCESS TO EXISTING ELECTRICAL INSTALLATIONS, WHICH REMAIN ACTIVE. MODIFY INSTALLATION OR PROVIDE ACCESS PANEL AS APPROPRIATE.

Y. EXTEND EXISTING INSTALLATIONS USING MATERIALS AND METHODS COMPATIBLE WITH EXISTING ELECTRICAL INSTALLATIONS, OR AS SPECIFIED. RELOCATE AND REROUTE CONDUIT AND WIRING AS REQUIRED FOR CONDUIT CONCEALED IN WALLS OR STRUCTURE BEING ALTERED AS PART OF THE REMODELING. MAINTAIN CONTINUITY TO ALL DEVICES IN AND DOWNSTREAM OF REMODELED WORK.

Z. REROUTE EXISTING RACEWAY AND WIRING, WHICH IS EXPOSED DUE TO REMOVAL OF EXISTING CONSTRUCTION. CONCEAL NEW RACEWAY AND WIRING AND MAINTAIN OPERATION

AA. DISPOSE OF FLUORESCENT LAMPS, BALLASTS, AND OTHER HAZARDOUS MATERIALS IN ACCORDANCE WITH STATE AND FEDERAL REGULATIONS.

BB. PRIOR TO REINSTALLATION OF USED EQUIPMENT, THOROUGHLY INSPECT EACH ITEM AND REPORT ANY DEFECTS TO THE ENGINEER/ARCHITECT IN WRITING. INSTRUCTIONS FOR CORRECTIVE MEASURES WILL BE GIVEN AT THE TIME AND THE CONTRACT AMOUNT ADJUSTED ACCORDINGLY. IF NO DEFECTS ARE REPORTED, THE MATERIAL WILL BE INCLUDED UNDER THE CONTRACTOR'S ONE–YEAR GUARANTEE AS OUTLINED IN SECTION 16010.

CC. PANELBOARDS: CLEAN EXPOSED SURFACES AND CHECK TIGHTNESS OF ELECTRICAL CONNECTIONS. REPLACE DAMAGED CIRCUIT BREAKERS AND PROVIDE CLOSURE PLATES FOR VACANT POSITIONS. PROVIDE TYPED CIRCUIT DIRECTORY SHOWING REVISED CIRCUITING ARRANGEMENT.

DD. LUMINARIES: REMOVE EXISTING LUMINARIES FOR CLEANING. USE MILD DETERGENT TO CLEAN ALL EXTERIOR AND INTERIOR SURFACES; RINSE WITH CLEAN WATER AND WIPE DRY. REPLACE LAMPS, BALLASTS, AND DEFECTIVE ELECTRICAL PARTS.

EE. INSTALL RELOCATED MATERIALS AND EQUIPMENT AS INDICATED ON THE DRAWINGS.

SECTION 26 05 00 - BASIC MATERIALS AND METHODS

A. ENCASE ALL CONDUCTORS IN A CONTINUOUS RACEWAY SYSTEM. PROVIDE PULL AND JUNCTION BOXES AS REQUIRED BY THE NEC. SIZE ALL RACEWAY PER THE NEC WITH OVERSIZE CONDUITS AS INDICATED. PROVIDE MINIMUM 3/4" CONDUIT FOR BRANCH CIRCUIT HOMERUNS, PROVIDE MINIMUM 1/2" CONDUIT, UNLESS NOTED OTHERWISE.

B. PROVIDE EMT FOR ALL CONDUCTORS UNLESS NOTED OTHERWISE. PROVIDE CONCRETE–TIGHT STEEL COMPRESSION OR STEEL SETSCREW TYPE FITTINGS, COUPLINGS AND BUSHINGS. CAST OR INDENTOR TYPE DEVICES ARE NOT ACCEPTABLE. ALL FITTINGS USED IN PLENUM APPLICATIONS SHALL BE RATED FOR SUCH USE.

C. PROVIDE IMC OR CONCRETE–ENCASED PVC CONDUIT FOR SERVICE ENTRANCE CONDUCTORS.

D. PVC CONDUIT MAY BE USED UNDERGROUND OR BELOW CONCRETE SLABS. PROVIDE COATED RIGID STEEL ELBOWS FOR ALL ELBOWS WHERE PVC IS USED.

E. PROVIDE FLEXIBLE METAL CONDUIT FOR CONNECTIONS TO TRANSFORMERS, MOTORS AND OTHER VIBRATING PIECES OF EQUIPMENT. PROVIDE LIQUID–TIGHT CONDUIT FOR ALL CONNECTIONS IN DAMP OR WET LOCATIONS. PROVIDE GROUND TYPE FITTINGS AND GROUNDING CONDUCTOR INSIDE ALL FLEXIBLE CONDUIT. ADJUST CONDUIT SIZE IF REQUIRED.

F. PROVIDE RECESSED OUTLET BOXES AND JUNCTION BOXES IN ALL NEW CONSTRUCTION. CONCEAL ALL CONDUIT WORK IN NEW CONSTRUCTION, EXCEPT MECHANICAL ROOMS. CONDUIT AND BOXES IN MECHANICAL ROOMS MAY BE RUN EXPOSED.

G. PROVIDE EXPANSION FITTINGS WHERE RACEWAY CROSSES BUILDING EXPANSION JOINTS.

H. RUN ALL EXPOSED CONDUIT IN A NEAT, WORKMANLIKE MANNER PARALLEL TO THE BUILDING LINES, TIGHT TO THE WALL AND CEILING SURFACES, AND FIRMLY SUPPORT WITH CONDUIT CLAMPS OR HANGERS. PROVIDE TWO (2) HOLE MOUNTING STRAPS, MINIMUM THREE (3) FEET ON CENTER, FOR ALL SURFACE CONDUIT MOUNTED ON WALLS LESS THAN SIX (6) FEET ABOVE FINISHED FLOOR. PLACE CONDUITS AT LEAST 8" AWAY FROM ALL HOT PIPING AND SURFACES INCLUDING DOMESTIC HOT WATER LINES.

I. PROVIDE GALVANIZED CODE GAUGE STEEL JUNCTION AND PULL BOXES WITH SCREW ON COVERS OF TYPE, SHAPE AND SIZE REQUIRED TO SUIT EACH INSTALLATION. PROVIDE GASKETING IN DAMP AND DUSTY LOCATIONS. PROVIDE CAST BOXES IN WEATHERPROOF, VAPOR TIGHT AND EXPLOSION PROOF ENVIRONMENTS.

J. PROVIDE 4" BOXES THROUGHOUT. PROVIDE 3 1/2" DEEP BOXES WHERE INSTALLED IN MASONRY, 2 1/2" MINIMUM ELSEWHERE. PROVIDE SINGLE GANG MUD OR TILE RING FOR SINGLE DEVICES.

K. MOUNT OUTLETS BOXES IN EXPOSED MASONRY WALLS WITH THE BOTTOM OF THE BOX ON THE TOP OF THE MORTAR JOINT AND THE VERTICAL LINE OF THE BOX EITHER ON THE MORTAR JOINT OR ON THE CENTER LINE OF THE MASONRY UNIT. PLUMB AND ACCURATELY ALIGN ALL WALL OUTLETS IN ROWS. MOUNT CEILING BOXES SYMMETRICAL WITH WALLS, BEAMS AND/OR TILES. MOUNTING HEIGHTS INDICATED ON THE DRAWINGS ARE FROM THE CENTER OF THE OUTLET BOX TO THE FINISHED FLOOR DIRECTLY BELOW THE OUTLET. EXTERIOR HEIGHTS ARE FROM INSIDE ADJACENT DOOR, OR IF NO DOOR, FROM THE FIRST FLOOR ABOVE GRADE, UNLESS NOTED OTHERWISE.

L. COORDINATE THE LOCATION OF ALL OUTLETS WITH ARCHITECTURAL AND MECHANICAL DRAWINGS BEFORE INSTALLATION. COORDINATE ALL DOOR SWINGS IN THE FIELD BEFORE LOCATING SWITCHES.

M. PROVIDE NEW WIRING DEVICES IN EACH OUTLET INDICATED ON THE DRAWINGS. PROVIDE ALL DEVICES FROM ONE MANUFACTURER.

N. APPROVED TOGGLE SWITCH MANUFACTURERS/MODEL NUMBERS:

MANUFACTURER	20A/120–277V WALL SWITCHES						
	1–POLE	1–POLE W/PILOT	2–POLE	3–WAY	4–WAY	KEYED 1–POLE	MOM. CONTACT
ARROW HART HUBBELL	1991 HBL–1221	1991I HBL–1221PL	1992 HBL–1222	1993 HBL–1223	1994 HBL–1224	1191L HBL–1221L	1995 HBL–1556
PASS & SEYMOUR	20AC1	20AC1–RPL	20AC2	20AC3	20AC4	20AC1–L	1251

O. APPROVED STANDARD RECEPTACLE MANUFACTURERS/MODEL NUMBERS:

MANUFACTURER	20A/125V STANDARD RECEPTACLES					
	SIMPLEX	DUPLEX	GFI	IG	TVSS	IG TVSS	TAMPER RESISTANT
ARROW HART	5361	5362	GF5342	IG5362	5362S	IG5362S	6352 (15 AMP)
HUBBELL	HB5361	HB5362	GF5362	IG5362	5362S	IG5362S	N/A
PASS & SEYMOUR	5361	5362	2091	IG6300	N/A	N/A	SG62 (15 AMP)
LEVITON	5361A	5362A	–	–	–	–	–

P. PROVIDE NEW COVERPLATES OVER ALL BOXES WITH THE FOLLOWING SPECIFICATIONS: ALL FINISHED AREAS AND UNFINISHED AREAS PROVIDE SMOOTH PLASTIC COVERS, COLOR TO MATCH ADJACENT SURFACE OR AS SELECTED BY THE ARCHITECT. PROVIDE APPROPRIATE COVERS OVER SPECIAL PURPOSE RECEPTACLES. PROVIDE NEW WEATHERPROOF COVERPLATES FOR OUTLETS AND SWITCHES AS INDICATED ON THE DRAWINGS AND FOR ALL EXTERIOR DEVICES.

Q. PROVIDE WIRE AND CABLE WITH INSULATION VOLTAGE RATING EQUAL TO OR GREATER THAN THE APPLIED SYSTEM VOLTAGE. PROVIDE SOLID OR STRANDED COPPER CONDUCTORS WITH TYPE THWN, THHN, OR XHHN INSULATION FOR NO. 12 AWG AND NO. 10 AWG CONDUCTORS. PROVIDE STRANDED COPPER CONDUCTORS WITH TYPE THWN, THHN, OR XHHW INSULATION FOR NO. 8 AWG AND LARGER CONDUCTORS. PROVIDE MINIMUM NO. 12 AWG CONDUCTOR SIZE, UNLESS NOTED OTHERWISE. USE THE MINIMUM CONDUCTOR SIZE WHEN NO SIZE IS INDICATED. ALL CONDUCTORS TO BE COLOR–CODED AS FOLLOWS; 120/208 VOLT SYSTEMS–PHASE A (BLACK), PHASE B (RED), PHASE C (BLUE), NEUTRAL (WHITE). 277/480–VOLT SYSTEMS–PHASE A (BROWN), PHASE B (ORANGE), PHASE C (YELLOW), NEUTRAL (WHITE WITH TRACER OR GRAY). GROUNDING SYSTEM (GREEN).

R. PRIOR TO TURNING THE BUILDING OVER TO THE OWNER TURN ON ALL EQUIPMENT IN THE BUILDING INCLUDING LIGHTING AND WITH A MULTIMETER, READ THE CURRENT DRAWN ON EACH HOT LEG OF FEEDER SUPPLYING EACH DISTRIBUTION PANEL. IF THE CURRENT IN ANY ONE LEG VARIES MORE THAN 5% (PLUS OR MINUS) FROM THE ARITHMETIC AVERAGE OF THE CURRENT IN ALL THE HOT LEGS, RECONNECT THE BRANCH CIRCUITS TO OBTAIN A BALANCED LOADING.

S. PROVIDE FIRE BARRIERS AROUND CONDUIT, PIPE, TUBING, BUS DUCTS AND CABLES PASSING THROUGH SMOKE AND FIRE RATED FLOORS AND WALLS. PROVIDE CP 25, 303 AND PSS7904 SERIES BY 3M, OR "FLAME–SAFE" SYSTEM BY THOMAS AND BETTS CORP FOR FIRE SEALS.

T. MAKE CONNECTIONS TO ALL MOTORS AND EQUIPMENT FURNISHED AND SET IN PLACE BY OTHERS. PROVIDE STARTERS, MANUAL CONTROLS AND AUXILIARY EQUIPMENT WHERE INDICATED IN SCHEDULES AND SPECIFIED HEREIN. PROVIDE ALL DISCONNECT SWITCHES AS INDICATED IN SCHEDULES, SPECIFIED HEREIN AND REQUIRED BY CODE.

SECTION 33 71 00 - POWER DISTRIBUTION

A. RETAIL METERING CENTER

1. PROVIDE METER SECTIONS CONTAINING METER QUANTITIES AS INDICATED ON THE DRAWINGS.
2. PROVIDE METER BRANCHES RATED 200 AMP MAXIMUM.
3. PROVIDE 3 PHASE, 4 WIRE METERS FOR USE ON 120/208 VOLT AND 277/480 VOLT, 3 PHASE, 4 WIRE SYSTEMS WITH SEVEN (7) JAW METER SOCKETS. METERS FURNISHED BY THE UTILITY COMPANY.
4. MOUNT ALL OF THE ABOVE COMPONENTS AS SHOWN ON THE DRAWINGS IN A UL APPROVED AND LABELED, NEMA CLASS 1 STEEL ENCLOSURE. ENCLOSURE TO BE CONSTRUCTED TO FINISHED STEEL CLEANED, PRIMED, AND PAINTED WITH BAKED ENAMEL FINISH PRIOR TO SHIPMENT TO THE JOB SITE.

B. PROVIDE FUSES OF THE FOLLOWING TYPES (BUSSMAN USED AS REFERENCE):

1. 600 AMPS AND ABOVE: TIME–DELAY TYPE DESIGNED TO HOLD 500% OF RATED CURRENT FOR A MINIMUM OF 4 SECONDS AND CLEAR 20 TIMES CURRENT IN 0.01 SECONDS OR LESS WITH INTERRUPTING RATINGS OF 200,000 AMPERES RMS SYMMETRICAL AND PEAK LET–THROUGH CURRENT AND ENERGY LET–THROUGH VALUES ESTABLISHED BY U.L. STANDARD FOR CLASS L FUSES. PROVIDE KRP–C FUSES.
2. BELOW 600 AMPS: DUAL–ELEMENT CONSTRUCTION WITH INTERRUPTING RATING OF 200,000 AMPERES RMS SYMMETRICAL AND PEAK LET–THRU CURRENT ESTABLISHED BY U.L. STANDARD FOR CLASS RK–1 FUSES. PROVIDE LPN–RK/LPS–RK.
3. MOTOR CIRCUITS: PROTECT ALL INDIVIDUAL MOTOR CIRCUITS WITH FULL LOAD AMPERE RATING (FLA) OF 480 AMPERES OR LESS WITH DUAL–ELEMENT TIME–DELAY FUSES. PROVIDE LPN–RK/LPS–RK. PROTECT LARGER HORSEPOWER MOTORS WITH TIME–DELAY FUSES. PROVIDE KRP–C FUSES. PROVIDE U.L. CLASS RK1, DUAL–ELEMENT TIME–DELAY FOR ALL OTHER MOTORS.
4. MOTOR CONTROLLERS: PROTECT NEMA AND IEC STYLE MOTOR CONTROLLERS WITH DUAL–ELEMENT, TIME–DELAY FUSES TO PROVIDE TYPE 2 COORDINATION FOR THE CONTROLLER. PROVIDE LPS–RK FUSES.
5. PROTECT CIRCUIT BREAKER PANELS WITH U.L. CLASS RK1, CLASS L FUSES. PROVIDE LPN–RK, LPS–RK, OR KRP–C FUSES.
6. PROVIDE FUSE SIZES AS INDICATED ON THE DRAWINGS.
7. ACCEPTABLE MANUFACTURERS: BUSSMAN, FERRAZ–SHAWMUT, LITTELFUSE OR PRE–APPROVED EQUAL.

C. PROVIDE LIGHTING AND APPLIANCE PANELBOARD ASSEMBLIES ADHERING TO THE FOLLOWING SPECIFICATIONS:

1. ENCLOSURES CONSTRUCTED OF GALVANIZED SHEET STEEL OF THICKNESS AS REQUIRED BY CODE, WITH ENAMELED STEEL TRIM, DISTRIBUTED BUSING, HINGED STEEL DOORS LATCHES, LOCKS AND ADJUSTABLE TRIM CLAMPS. PROVIDE NEMA 3R ENCLOSURES FOR EXTERIOR LOCATIONS.
2. PROVIDE WELDED METAL FRAME WITH TYPED CIRCUIT DIRECTORY FOR EACH PANEL.
3. COMPLIANT TO THE FOLLOWING STANDARDS: UL 50, UL 67, NEMA PB–1, NFPA 70 AND FED. SPEC W–P–115C , UL 489, NEMA AB–1, FED. SPEC. W–C–375B/GEN, IEC 157–1 AND BS 4752.
4. COMPLIANT TO ARTICLE 384 OF THE NEC: "LIGHTING AND APPLIANCE PANELBOARD". MAXIMUM OF 42 POLES PER PANELBOARD ASSEMBLY.
5. PROVIDE PANELBOARDS WITH INTERRUPTING RATINGS AS SHOWN ON THE PLANS.
6. PROVIDE 240 VOLT AC RATED PANELBOARDS FOR 208/120 AND 240 VOLT AC SYSTEMS. PROVIDE 480/277 VOLT RATED PANELBOARDS FOR 480/277 VOLT SYSTEMS
7. PROVIDE TIN–PLATED COPPER BUS BARS OR TIN–PLATED ALUMINUM BUS BARS.
8. PROVIDE PROPER LUGS (75° C. MINIMUM TEMPERATURE RATING) AND GUTTER SPACE FOR CABLE SIZE INDICATED ON THE PLANS.
9. PROVIDE ALL PANELS BY THE SAME MANUFACTURER.
10. PROVIDE SCREW MOUNTED, ENGRAVED NAMEPLATES FOR EACH PANELBOARD.
11. PROVIDE MOLDED CASE, NON–ADJUSTABLE, THERMAL–MAGNETIC, QUICK–MAKE, QUICK–BREAK, BOLT–ON TYPE CIRCUIT BREAKERS. REFER TO THE SCHEDULES ON THE PLANS FOR SIZES AND QUANTITIES.
12. PROVIDE MULTI–POLE BREAKERS WHERE INDICATED ON THE SCHEDULES. HANDLE TIES ON SINGLE POLE BREAKERS ARE NOT ACCEPTABLE.
13. SERIES RATING OF CIRCUIT BREAKERS IS NOT ALLOWED.
14. ACCEPTABLE MANUFACTURERS:
    a. 240 VOLT: SQUARE D TYPE NQOD OF NF, SIEMENS TYPE S1 SERIES, CUTLER HAMMER POW–R–LINE 1A SERIES, GENERAL ELECTRIC AQ SERIES, OR PRE–APPROVED EQUAL.
    b. 480 VOLT: SQUARED D TYPE NF, SIEMENS TYPE S2 SERIES, CUTLER HAMMER POW–R–LINE 2A SERIES, GENERAL ELECTRIC AE SERIES, OR PRE–APPROVED EQUAL.

D. PROVIDE PANEL IDENTIFICATION LABEL FOR EACH PANEL INCLUDING PANEL NAME, VOLTAGE AND FEEDER. FOR EXAMPLE: "HDP–1–1, 480/277 V, 3∅, 4 WIRE, 2"C – 4 # 4/0 THWN".

E. MOUNT PANELBOARDS AND CABINETS TO BUILDING STRUCTURE OR INTERIOR WALL CONSTRUCTION. MOUNT INDEPENDENT OF CONDUIT AND RACEWAYS ENTERING BOXES.

F. MOUNT PANELBOARDS WITH CABINET TOP AT 78" ABOVE FINISHED FLOOR.

G. PROVIDE 3/4"EMPTY CONDUITS FROM EACH FLUSH MOUNTED PANELBOARD. WHEN THE FLOOR IS ON GRADE, PROVIDE THREE (3) CONDUITS INTO THE CEILING CAVITY ABOVE. WHEN THE FLOOR HAS ACCESSIBLE SPACE BELOW, PROVIDE TWO (2) CONDUITS INTO THE CEILING SPACE ABOVE AND TWO (2) CONDUITS INTO THE ACCESSIBLE SPACE BELOW THE FLOOR. ENDS SHALL BE CAPPED AND SHALL BE TAGGED AT BOTH ENDS WITH PERMANENT TAGS.

H. EQUIPMENT GROUND – SOLIDLY GROUND ALL CONDUIT SYSTEMS, SWITCH BOXES, CABINETS, MOTOR FRAMES, SWITCHGEAR, TRANSFORMERS, AND ALL OTHER PERMANENTLY INSTALLED EQUIPMENT IN ACCORDANCE WITH THE LATEST EDITION OF THE NATIONAL ELECTRICAL CODE TO FORM A CONTINUOUS, PERMANENT AND EFFECTIVE GROUNDING SYSTEM. BOND EXPANSION JOINTS AND METAL RACEWAY SECTIONS. PROVIDE GROUND CONDUCTOR AS INDICATED ON THE DRAWINGS OR SPECIFIED HEREIN.

SECTION 26 29 13 - ENCLOSED CONTROLLERS

A. PROVIDE "ON–OFF" TOGGLE TYPE MANUAL STARTER SWITCH WITH THERMAL OVERLOAD PROTECTION FOR SINGLE PHASE MOTORS, WHERE MANUAL CONTROL IS INDICATED. PROVIDE EACH SWITCH WITH A RED PILOT LIGHT INDICATING WHEN MOTOR IS ON.

B. PROVIDE FULL VOLTAGE TYPE STARTERS AND THERMAL OVERLOAD PROTECTION AND EXTERNAL MANUAL RESET FOR ALL THREE–PHASE MOTORS, UNLESS INDICATED OTHERWISE. EQUIP EACH STARTER WITH 120 VOLT COIL, CONTROL POWER TRANSFORMER, SECONDARY FUSE BLOCK AND FUSES, AUXILIARY CONTACTS AS INDICATED, RED "ON" PILOT LIGHT, AND "HAND–OFF–AUTO" CONTROL SWITCH. PROVIDE COMBINATION STARTER/DISCONNECT WHEN INDICATED ON THE PLANS. ACCEPTABLE MANUFACTURERS FOR MAGNETIC STARTERS: ALLEN–BRADLEY BULL. 509 &512, SQUARE D CLASS 8536, CUTLER HAMMER, GENERAL ELECTRIC, ITE/SIEMENS EQUIVALENT OR PRE–APPROVED EQUAL.

C. PROVIDE MANUAL MOTOR STARTING SWITCH OR TYPE "SS" FUSED DISCONNECT ADJACENT TO EACH 120 VAC SINGLE PHASE MOTOR LOCATED OUT OF SIGHT AND/OR IN EXCESS OF 50'–0" FROM THE CONTROLLER, OR AS INDICATED ON THE DRAWINGS.

SECTION 16460 - TRANSFORMERS

A. PROVIDE VENTILATED, INDOOR, DRY–TYPE DISTRIBUTION TRANSFORMER WITH THE CAPACITY AND VOLTAGE CHARACTERISTICS INDICATED ON THE DRAWINGS. TRANSFORMERS 15 KVA AND ABOVE WILL BE DESIGNED TO OPERATE WITH A 115 DEGREES C. TEMPERATURE RISE ABOVE 40 DEGREES C. AMBIENT. PROVIDE ALL INSULATING MATERIALS FOR A 220 DEGREES C. INSULATION SYSTEM.

B. PROVIDE TRANSFORMERS MEETING OR EXCEEDING NEMA CLASS 1 EFFICIENCY REQUIREMENTS AS REQUIRED IN THE LOCAL ENERGY CODE.

C. PROVIDE VOLTAGE TAPS AS INDICATED BELOW:

1. PROVIDE TWO 5% FCBN TAPS FOR ALL SINGLE AND 3 PHASE TRANSFORMERS 9 KVA AND BELOW.
2. PROVIDE TWO 2 1/2% FCBN AND TWO 2 1/2% FCAN TAPS FOR ALL 3 PHASE TRANSFORMERS 15 KVA AND BELOW.
3. PROVIDE FOUR 2 1/2% FCBN AND TWO 2 1/2% FCAN TAPS FOR ALL 3 PHASE TRANSFORMERS ABOVE 15 KVA.

D. PROVIDE SOUND RATINGS NOT EXCEEDING THE FOLLOWING LEVELS:

1. 0 TO 15 KVA, 40 DECIBELS.
2. 15 TO 50 KVA, 45 DECIBELS.
3. 50 KVA OR GREATER, 50 DECIBELS.

E. PROVIDE CONTINUOUS COPPER OR ALUMINUM COIL CONDUCTORS WITH BRAZED OR WELDED TERMINATIONS.

F. ISOLATE TRANSFORMER CORE AND COIL FROM THE ENCLOSURE USING VIBRATION – ABSORBING MOUNTS.

G. PROVIDE TRANSFORMERS 75 KVA OR LESS WITH ENCLOSURES SUITABLE FOR WALL, FLOOR OR TRAPEZE MOUNTING. PROVIDE TRANSFORMER LARGER THAN 75 KVA WITH ENCLOSURES SUITABLE FOR FLOOR OR TRAPEZE MOUNTING.

H. PROVIDE MAXIMUM CASE TEMPERATURES NOT EXCEEDING A 35C TEMPERATURE RISE ABOVE A 40 DEGREE C AMBIENT.

I. ACCEPTABLE MANUFACTURERS: CUTLER HAMMER, GENERAL ELECTRIC, SORGEL, HEVI–DUTY JEFFERSON ELECTRIC OR PRE–APPROVED EQUAL.

SECTION 26 50 00 - LIGHTING

A. COMPLY WITH NEC AS APPLICABLE TO THE INSTALLATION AND CONSTRUCTION OF LIGHT FIXTURES.

B. PROVIDE LIGHT FIXTURES THAT ARE LISTED AND LABELED BY U.L. OR ANOTHER NATIONALLY RECOGNIZED TESTING LABORATORY FOR THE APPLICATION.

C. PROVIDE LAMP BALLASTS THAT COMPLY WITH CERTIFIED BALLAST MANUFACTURERS ASSOCIATION STANDARDS AND CARRY THE CBM LABEL.

D. COMPLY WITH ALL LOCAL, STATE AND FEDERAL ENERGY CODES.

E. PROVIDE FIXTURES WITH LAMPS, FOR EACH OUTLET SHOWN ON THE DRAWINGS AND AS SPECIFIED HEREIN. SEE FIXTURES LIST ON THE PLAN.

F. PROVIDE FLUORESCENT LAMP BALLASTS WITH THE FOLLOWING MINIMUM SPECIFICATIONS

1. PROVIDE U.L. LISTED AND LABELED, C.B.M. APPROVED BALLASTS.
2. PROGRAMMED RAPID START TECHNOLOGY TO ENSURE LONGEST LAMP LIFE.
3. T8 ONLY: PARALLEL–WIRED OPERATION TO ENSURE LIGHT OUTPUT FROM ONE BALLAST EVEN WITH ONE OR TWO LAMPS EXTINGUISHED.
4. COMPACT FLUORESCENT ONLY: SERIES WIRED LAMPS FOR MULTIPLE LAMP CONFIGURATIONS, AND PLUG–IN LEAD CONNECTORS FOR ALL LAMP LEADS
5. CLASS "P" RATED WITH THERMALLY ACTIVATED AUTOMATIC RESETTING PROTECTIVE DEVICES SEALED IN HOUSING.
6. CURRENT CREST FACTOR: 1.7 OR LESS ON 60 HZ MODULATED CURRENT.
7. COMPLY WITH FCC RULES PART 18 REQUIREMENTS GOVERNING ELECTROMAGNETIC AND RADIO FREQUENCY INTERFERENCE
8. COMPLIES WITH IEEE 587 FOR WITHSTANDING LINE TRANSIENTS, VOLTAGE REGULATION + 10 PERCENT, LIGHT REGULATION + 10 PERCENT.
9. BALLAST FACTOR: 0.88 OR HIGHER.
10. POWER FACTOR: GREATER THAN 95 PERCENT
11. SOUND RATING: "A"
12. MINIMUM 5 YEAR WARRANTY INCLUDING $10/BALLAST LABOR
13. TOTAL HARMONIC DISTORTION: <20%, BUT GREATER THAN 10%.
14. END–OF–LIFE LAMP SENSING FOR ALL COMPACT FLUORESCENT BALLASTS.

G. APPROVED MANUFACTURERS – T8 ELECTRONIC BALLASTS

1. ADVANCE CENTIUM PROGRAM RAPID START SERIES
2. UNIVERSAL LIGHTING TECHNOLOGIES TRIAD ACCUSTART SERIES

H. APPROVED MANUFACTURERS – COMPACT FLUORESCENT

1. MOTOROLA GOLD EDITION
2. ROBERTSON
3. OSRAM QUICKTRONIC SERIES
4. UNIVERSAL LIGHTING TECHNOLOGIES
5. HALO

I. PROVIDE LAMPS AS NOTED IN LIGHT FIXTURE SCHEDULE

J. PROVIDE SOLID STATE, SLID–TYPE DIMMERS SUITABLE FOR MOUNTING BEHIND A STANDARD DEPTH FACEPLATE AND FOR OPERATION ON COMMON NEUTRAL CIRCUITS.

1. PROVIDE 600 WATTS CAPACITY PER DIMMER UNLESS NOTED OTHERWISE ON THE PLANS.

BROWN SHOE COMPANY, INC.
8300 Maryland Ave.
Clayton, MO 63105
314/854-4000

BROWN
SHOE COMPANY

09/15/2014	BID & PERMIT
09/26/2014	2 LANDLORD COMMENTS

TRICARICO®
Tricarico Architecture and Design PC
502 Valley Road Wayne, NJ 07470
T (973) 692-0222 F (973) 692-0223
www.tricarico.com

PROHIBITION ON REUSE:
INFORMATION CONTAINED IN THESE DRAWINGS AND SPECIFICATIONS WAS PREPARED FOR USE ON THE SPECIFIC SITE INDICATED. USE OF THIS INFORMATION ON ANOTHER PROJECT IS PROHIBITED AND CONTRARY TO LAW UNLESS EXPRESSLY AUTHORIZED IN WRITING BY THE AUTHOR.

THESE DRAWINGS AND SPECIFICATIONS ARE AND SHALL REMAIN THE PROPERTY OF THE BROWN SHOE, INC. DISPLAY, REPRODUCTION, OR USE FOR ANY BUT THE SPECIFICALLY AGREED UPON PURPOSES, WITHOUT THE WRITTEN AUTHORIZATION OF BROWN SHOE, INC. IS STRICTLY PROHIBITED.

COPYRIGHT NOTICE:
THESE DRAWINGS AND SPECIFICATIONS ARE SUBJECT TO COPYRIGHT PROTECTION AS AN "ARCHITECTURAL WORK" UNDER SEC. 102 OF THE COPYRIGHT ACT, 17 U.S.C. AS AMENDED DECEMBER 1990; KNOWN AS THE ARCHITECTURAL WORKS COPYRIGHT PROTECTION ACT OF 1990. THE PROTECTION INCLUDES, WITHOUT LIMITATION, THE OVERALL FORM, ARRANGEMENT, AND COMPOSITION OF SPACES AND ELEMENTS OF THE DESIGN.

FAMOUS footwear
STORE #3406
NORTH POINT MALL
1000 NORTH POINT CIR SUITE 2208
ALPHARETTA, GA 30022

DESIGNED BY:	BF
DRAWN BY:	
CHECKED BY:	
DATE:	09/26/14
PROTO. VER.:	010413
PROJECT NO:	140341

SPECIFICATIONS

SP-4

COPYRIGHT ©2014 BY BROWN SHOE, INC. PROTOTYPE VERSION: 010413

2. ACCEPTABLE MANUFACTURERS: LUTRON NOVA T-STAR SERIES OR PRE-APPROVED EQUAL.

K. SOLID STATE TYPE TIME SWITCHES.

1. PROVIDE SOLID STATE, PROGRAMMABLE 24 HOUR OR 7-DAY, ELECTRIC TIME SWITCH WITH FOUR (4) SPST CONTACT RATED 20A AT 240 VOLTS. PROVIDE LONG LIFE LITHIUM BATTERY BACKUP TO MAINTAIN TIME AND MEMORY SETTING DURING A POWER OUTAGE.

2. ACCEPTABLE MANUFACTURERS

a. PARAGON EC7000 SERIES
b. TORK MODEL D100 SERIES
c. PRE-APPROVED EQUAL

L. PROVIDE LIGHTING CONTACTORS THAT ADHERE TO THE FOLLOWING SPECIFICATIONS, WHERE LIGHTING CONTROL RELAYS OR CONTACTORS ARE CALLED OUT ON THE DRAWINGS:

1. ELECTRICALLY HELD RELAY, 30 AMP BALLAST RATED, 20 AMPS TUNGSTEN RATED @ 277 VOLTS

2. 2 POLE MINIMUM (REFER TO PLANS FOR REQUIRED POLES)

3. INSTALLED IN NEMA 1 ENCLOSURE INDOORS, NEMA 3R ENCLOSURE OUTDOORS.

4. COIL VOLTAGE: 24VAC.

5. COORDINATE ACCESSORIES WITH DIVISION 23 00 00'S EMS CONTRACTOR.

6. APPROVED MANUFACTURERS:
a. SQUARE D CLASS 8903, TYPE 'L' SERIES
b. ASCO 917 SERIES
c. SIEMENS TYPE CLM
d. PRE-APPROVED EQUAL

M. PROVIDE PHOTOELECTRIC SWITCH CONTROL WITH A SET OF SPST CONTACTS RATED AT 120 VOLT AC, 1800VA IN A NEMA 3R ENCLOSURE.

1. UL LISTED.

2. APPROVED MANUFACTURERS:

a. PARAGON CW/210 SERIES
b. TORK 2101 SERIES

3. IF USED AS A SENSOR INPUT TO THE LIGHTING CONTROL SYSTEM, PROVIDE PHOTOCELL CONTROLLERS FULLY-COMPATIBLE WITH THE LIGHTING CONTROL PANELS USED ON THIS PROJECT. REFER TO SECTION 26 09 23.

N. PROVIDE ALL HANGERS, RODS, MOUNTING BRACKETS, SUPPORTS, FRAMES, ETC. FOR PROPER AND SAFE FIXTURE INSTALLATION. INSTALL ALL FIXTURES IN ACCORDANCE WITH MANUFACTURERS' RECOMMENDATIONS AND INSTRUCTIONS.

O. PROVIDE FIXTURES COMPLETE WITH ALL AUXILIARIES REQUIRED FOR PROPER, SAFE AND DISTORTION FREE INSTALLATION IN THE VARIOUS CEILING CONSTRUCTIONS IN WHICH THEY APPEAR. COORDINATE CEILING TYPES WITH THE ARCHITECTURAL DRAWINGS AND PROVIDE COMPATIBLE FIXTURES.

P. PROVIDE FELT OR FIBERGLASS GASKETS ON ALL INCANDESCENT LIGHTING FIXTURES WHERE NECESSARY TO PREVENT LIGHT LEAKAGE AT THE CEILING LINE.

Q. SECURELY SUPPORT ALL LIGHT FIXTURES DIRECTLY FROM BUILDING STRUCTURAL MEMBERS OR 1 1/2" OR LARGER STEEL CEILING FRAMING CHANNELS. USE STEEL CHANNEL EQUIVALENT TO KINDORF #6029 WHERE IT IS NECESSARY TO SPAN THE BUILDING STRUCTURAL MEMBERS FOR FIXTURE SUPPORT. WOOD SUPPORTING MEMBERS OR WIRES WILL NOT BE ACCEPTABLE. PROVIDE MINIMUM ¼" DIAMETER LAG SCREWS WHEN ANCHORING INTO WOOD STRUCTURAL MEMBERS. PENETRATE WOOD STRUCTURAL MEMBERS A MINIMUM OF 2" WITH ALL SCREWS. PROVIDE STEEL OR LEAD, EXPANDABLE TYPE, ANCHORS WITH MINIMUM PENETRATION OF 1 1/2" WHEN ANCHORING TO CONCRETE. WHEN INSTALLING LIGHT FIXTURES IN A SEISMIC ZONE, SECURE TO MEET ALL REQUIREMENTS.

R. DO NOT SUSPEND ANY CONDUIT, LIGHT FIXTURES, OR BALLASTS FROM METAL ROOF DECK OR FROM THE CEILING SUSPENSION WIRES. SUPPORT ALL LAY-IN FIXTURES INDEPENDENT OF THE CEILING SUPPORT SYSTEM. PROVIDE FASTENING CLIPS ON EACH CORNER OF EACH FIXTURE IN ACCORDANCE WITH THE APPLICABLE BUILDING CODES.

S. EQUIP ALL FIXTURES USING CONDUIT STEMS WITH BALL SWIVEL HANGERS. IN FINISHED AREAS, PROVIDE CANOPIES FOR THE HANGERS.

T. SUPPORT ALL SURFACE MOUNTED FLUORESCENT FIXTURES WITH A MINIMUM OF ONE HANGER PER FIXTURE PLUS ONE PER ROW. SUPPORT INDIVIDUAL FIXTURES WITH A MINIMUM OF TWO HANGERS. ATTACH FIXTURE HANGERS TO THE CEILING GRID PER CODE.

U. SUPPORT ALL SUSPENDED FLUORESCENT FIXTURES WITH A MINIMUM OF TWO FIXTURE HANGERS. ATTACH EACH HANGAR TO A DEDICATED ANCHOR. LOCATE HANGARS DIRECTLY ABOVE THE CORNERS OF THE LIGHT FIXTURES.

V. WHERE MASTER/SLAVE OR INBOARD/OUTBOARD SWITCHING IS INDICATED, PROVIDE TANDEM-WIRED BALLASTS BETWEEN LIGHT FIXTURES AS REQUIRED BY THE LOCAL ENERGY CODE

W. WIRE ALL RECESSED LAY-IN FIXTURES WITH 6 FEET OF FLEXIBLE METAL CONDUIT WITH TYPE "THHN/THWN" WIRE TO THE OUTLET BOX. PROVIDE GROUNDING TYPE CONNECTORS FOR ALL CONDUIT AND CABLE.

X. PROVIDE OUTLET BOXES ADJACENT TO EACH RECESSED FIXTURE OUTLET IN SUSPENDED CEILINGS TO PERMIT EACH FIXTURE TO BE ADJUSTED TO FIT CEILING PATTERN AND TO PERMIT "FEED THROUGH" WIRING.

Y. AT THE TIME OF SUBSTANTIAL COMPLETION, ALL FIXTURES MUST BE INSTALLED AND LAMPED WITH NEW LAMPS. INSTALL ALL FIXTURES COMPLETE WITH LENSES, DIFFUSERS, REFLECTORS, LOUVERS AND OTHER REQUIRED ACCESSORIES.

Z. REPLACE ANY DAMAGED REFLECTORS, DIFFUSERS, LOUVERS OR OTHER COMPONENTS AT NO EXPENSE TO THE OWNER.

AA. CLEAN ALL FIXTURES FREE OF DUST, FINGER PRINTS, PAINT, ETC..

BB. PERFORM AIMING AND ADJUSTMENT OF ALL LIGHTING FIXTURES IN ACCORDANCE WITH INSTRUCTIONS ISSUED BY THE ENGINEER/TENANT. ADJUST ALL DIRECTIONAL TYPE FIXTURES (INTERIOR AND EXTERIOR) AFTER DARK UNDER THE DIRECTION OF THE ARCHITECT, ENGINEER, AND/OR TENANT.

CC. REPLACE ALL DEFECTIVE BALLASTS WITHIN THE GUARANTEE PERIOD AT NO COST TO THE TENANT.

DD. INSTALL TIME SWITCHES ADJACENT TO THE SOURCE LIGHTING PANEL, UNLESS SPECIFICALLY LOCATED ELSEWHERE ON THE PLANS.

EE. PROVIDE "NAMEPLATES" A SPECIFIED IN SECTION 26 50 00 FOR ALL CONTACTORS AND TIME SWITCHES. LABEL CONTACTORS AND TIME SWITCHES TO INDICATE LOAD SERVED (E.G., CANOPY LIGHTS, STORE SIGN, ETC.).

SECTION 26 52 00 - EMERGENCY LIGHTING

A. PROVIDE AUTOMATIC BATTERY POWERED LIGHTING UNITS AS INDICATED ON THE DRAWINGS.

B. PROVIDE EMERGENCY LIGHTING AS SHOWN ON THE PLANS TO ILLUMINATE THE EGRESS CORRIDORS AND OTHER REQUIRED AREAS. REFER TO THE LIGHT FIXTURE SCHEDULE ON THE DRAWINGS FOR TYPES.

C. PROVIDE AN INTENSITY OF NOT LESS THAN 1.0 FOOTCANDLE AT THE FLOOR LEVEL ALONG THE PATH OF EGRESS.

D. PROVIDE AN EXIT LIGHT AT EACH EXIT AND ALONG THE EGRESS PATH AS REQUIRED.

E. CONNECT EMERGENCY LIGHTS TO THE UNSWITCHED BRANCH CIRCUIT(S) IN THE AREA PROVIDE HANDLE-LOCK DEVICE FOR THAT CIRCUIT.

SECTION 26 05 33 - RACEWAYS AND BOXES FOR ELECTRICAL SYSTEMS

A. PROVIDE 4" SQUARE BOXES FOR EACH RECESSED OUTLET BOX. PROVIDE 3½" DEEP MASONRY TYPE IN RECESSED MASONRY INSTALLATIONS. PROVIDE MUD OR TILE RING AS REQUIRED FOR ALL BOXES.

B. PROVIDE THE FOLLOWING IN ACCESSIBLE CEILINGS AS FOLLOWS: PROVIDE AN EMPTY BOX WITH (1) 3/4" CONDUIT STUBBED INTO CEILING SPACE FOR EACH TELEPHONE OUTLET INDICATED ON THE DRAWINGS; PROVIDE AN EMPTY BOX WITH (2) 3/4" CONDUIT STUBBED INTO CEILING SPACE FOR EACH DATA, VOICE/DATA OR FIBER OPTIC OUTLET INDICATED ON THE DRAWINGS.

C. PROVIDE THE FOLLOWING IN INACCESSIBLE CEILINGS (PLASTER, SPLINE, GYPSUM, SECURITY GRID, PLANK, ETC.) AS FOLLOWS: PROVIDE AN EMPTY BOX WITH (1) 3/4" CONDUIT ROUTED TO THE NEAREST TELEPHONE BACKBOARD LOCATION FOR EACH TELEPHONE OUTLET, UNLESS NOTED OTHERWISE ON THE PLANS; PROVIDE AN EMPTY BOX WITH (2) 3/4" CONDUIT ROUTED TO THE NEAREST COMMUNICATIONS CLOSET BACKBOARD LOCATION FOR EACH DATA, VOICE/DATA, OR FIBER OPTIC OUTLET, UNLESS NOTED OTHERWISE ON THE PLANS.

UL DESIGN U-465 (NON-BEARING 1 HR. WALL)

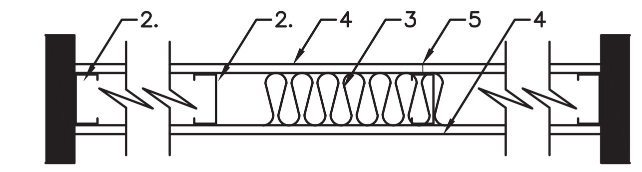

1. Floor and Ceiling Runners-(not shown)-Channel shaped runners, 3-5/8 in. wide (min), 1-1/4 in. legs, formed from min No. 25 MSG (min No. 20 MSG when Item 4C is used) galv steel, attached to floor and ceiling with fasteners spaced 24 in. OC max.
2. Steel Studs-Channel shaped, 3-5/8 in. wide (min), 1-1/4 in. legs, 3/8 in. folded back returns, formed from min No. 25 MSG (min No. 20 MSG when Item 4C is used) galv steel spaced 24 in. OC max.
3. Batts and Blankets*-(Optional)-Mineral wool or glass fiber batts partially or completely filling stud cavity. See Batts and Blankets (BZJZ) category for names of Classified companies.
4. Wallboard, Gypsum*-5/8 in. thick, 4 ft wide, attached to steel studs and floor and ceiling track with 1 in. long, Type S steel screws spaced 8 in. OC. along edges of board and 12 in. OC in the field of the board. Joints oriented vertically and staggered on opposite sides of the assembly. When attached to item 6 (furring channels), wallboard is screw attached to furring channels with 1 in. long, Type S steel screws spaced 12 in. OC.
   American Gypsum Co.-Type AG-C.
   Canadian Gypsum Company-Types AR, C, IP-X2, SCX, SHX, WRC or WRX.
   Continental Gypsum Company-Types CG-C, CG5-5, CG6-6, CG9-9, CGTC-C.
   G-P Gypsum Corp.-Types 5, 9, C, GPFS6.
   James Hardie Gypsum Inc.-Type BG-C.
   Lafarge Gypsum, A div. of Lafarge Corp.-Types LGFC6, LGFC-C.
   National Gypsum Co., Charlotte, NC-Types FSK-G, FSW-G.
   National Gypsum Co., Riyadh, Saudi Arabia-Type FR or WR.
   Pabco Gypsum Co.-Type PG-C.
   Republic Gypsum Co.-Type RG-C.
   Standard Gypsum Corp.-Type SG-C.
   Temple-Inland Forest Products Corp.-Type TG-C.
   United States Gypsum Co.-Tpe AR, C, IP-X2, SCX, SHX, WRC or WRX.
   Yeso Panamericano SA de CV-type AR, C, IP-X2, SCX, SHX, WRC or WRX.
   Westroc Inc.-Type Westroc Fireboard.

4A. Wallboard, Gypsum*-(As an alternate to Item 4)-Nom 3/4 in. thick, 4 ft wide, installed as described in Item 4 with screw length increased to 1-1/4 in.
   Canadian Gypsum Company-Type AR.
   United States Gypsum Co.-Type AR.
   Yeso Panamericano SA de CV-Type AR.

4B. Wallboard, Gypsum*-(As an alternate to Items 4 and 4A)-5/8 in. thick installed as described in Item 4. Joint covering (Item 5) not required.
   Canadian Gypsum Company-Type WSX.
   United States Gysum Co.-Type WSX.
   Yeso Panamericano SA de CV-Type WSX.

4C. Wallboard, Gypsum*-(As an alternate to Item 4, 4A and 4B)-5/8 in. thick gypsum panels, installed as described in Item 4 with Type S-12 steel screws. The length and spacing of the screws as specified under Item 4.
   Canadian Gypsum Company-Type FRX.
   United States Gypsum Co.-Type FRX.

5. Joint Tape and Compound-Vinyl, dry or premixed joint compound, applied in two coats to joints and screw heads; paper tape, 2 in. wide, embedded in first layer of compound over all joints. As an alternate, nominal 3/32 in. thick gypsum veneer baseboard. Joints reinforced.
6. Furring Channel-(Optional-not Shown)-Resilient 25 MSG galv steel furring channels spaced vertically max 24 in. OC, flange portion attached to each intersecting stud with 1/2 in. long type S-12 panhead steel screws. Not for use with Type FRX gypsum panels.

*Bearing the UL Classification Marking

BROWN SHOE COMPANY, INC.
8300 Maryland Ave.
Clayton, MO 63105
314/854-4000

BROWN SHOE COMPANY

09/15/2014	BID & PERMIT
09/26/2014	△2 LANDLORD COMMENTS

TRICARICO®
Tricarico Architecture and Design PC
502 Valley Road Wayne, NJ 07470
T (973) 692-0222 F (973) 692-0223
www.tricarico.com

PROHIBITION ON REUSE: INFORMATION CONTAINED IN THESE DRAWINGS AND SPECIFICATIONS WAS PREPARED FOR USE ON THE SPECIFIC SITE INDICATED. USE OF THIS INFORMATION ON ANOTHER PROJECT IS PROHIBITED AND CONTRARY TO LAW UNLESS EXPRESSLY AUTHORIZED IN WRITING BY THE AUTHOR.

THESE DRAWINGS AND SPECIFICATIONS ARE AND SHALL REMAIN THE PROPERTY OF THE BROWN SHOE, INC. DISPLAY, REPRODUCTION, OR USE FOR ANY BUT THE SPECIFICALLY AGREED UPON PURPOSES, WITHOUT THE WRITTEN AUTHORIZATION OF BROWN SHOE, INC. IS STRICTLY PROHIBITED.

COPYRIGHT NOTICE: THESE DRAWINGS AND SPECIFICATIONS ARE SUBJECT TO COPYRIGHT PROTECTION AS AN "ARCHITECTURAL WORK" UNDER SEC. 102 OF THE COPYRIGHT ACT, 17 U.S.C. AS AMENDED DECEMBER 1990; KNOWN AS THE ARCHITECTURAL WORKS COPYRIGHT PROTECTION ACT OF 1990. THE PROTECTION INCLUDES, WITHOUT LIMITATION, THE OVERALL FORM, ARRANGEMENT, AND COMPOSITION OF SPACES AND ELEMENTS OF THE DESIGN.

FAMOUS footwear
STORE #3406
NORTH POINT MALL
1000 NORTH POINT CIR SUITE 2208
ALPHARETTA, GA 30022

DESIGNED BY:	BF
DRAWN BY:	
CHECKED BY:	
DATE:	09/26/14
PROTO. VER.:	010413
PROJECT NO:	140341

SPECIFICATIONS

SP-5

COPYRIGHT © 2014 BY BROWN SHOE, INC. PROTOTYPE VERSION: 010413

2023 Tenant Handbook

Revised 1.24.2023

Tenant Handbook

TABLE OF CONTENTS

Section 1: Welcome

Welcome 3
General Information 3

Section 2: Shopping Center Information

Management Information 4
Shopping Center Hours 5
Holidays 5
Shopping Center Amenities 6
No Smoking Policy 6

Section 3: Security, Safety, Emergencies

Security 7
Lost & Found Procedures 8

Section 4: Rules & Regulations

Employee & Overnight Parking Policies 9
Common Area 9
Miscellaneous Rules & Regulations 9
Sign Regulations 10
Care of Premises 11
Storefront Maintenance 11
Inventory 11
Use of Service Courts 11
Delivery Regulations 12
Insurance 12

Section 5: Operations & Construction

Air Conditioning Units and Roof Access 13
Trash Disposal 13
Pest Control 14
Construction & Remodeling 14
Fire Inspections 14
Operational Issues 15

Section 6: Management Services

In-Store Events 16
Retailer Consultations 16
Marketing Opportunities 16
Public Relations and Media 17

Appendices

Appendix A:
Lower-Level Map 18
Upper-Level Map 19
Appendix B: Employee Parking Map 20
Appendix C: Delivery Zones & Freight Elevators 21
Appendix E: Contractors' Insurance Requirements 22

SECTION 1: WELCOME

Welcome! You have just become part of the North Point Mall family of fine retailers, and we are very glad that you're here!

This Tenant Handbook has been created for your convenience as an easy reference for general rules, policies and procedures concerning your store's operation at the North Point Mall.

Your review and familiarity with the contents of this Handbook will contribute towards meeting our mutual goal – the success of your store. The information contained herein answers the most asked questions by store managers and sales associates. In the event you have a question not addressed in this Handbook, please contact the Management Office at 770-740-8636. Additions and updates will be distributed as the need arises.

General Information

North Point Mall is managed by Trademark Property Company, which is based in Ft. Worth, TX. We are a full-service real estate firm, rethinking the future of retail, office, multifamily and mixed-use places. Our purpose is to be extraordinary stewards, enhance communities and enrich lives. We start every project by listening to all stakeholders and learning each project's unique history and context.

North Point Mall is an outstanding, two level, super-regional shopping center strategically located off Interstate 400 in the heart of Atlanta's affluent North Fulton County market.

North Atlanta's premiere community-focused shopping center, North Point Mall features over 1.3 million square feet of family-friendly retail space, including the department stores Dillard's, JCPenney, Macy's and Von Maur.

Surrounded by an affluent residential base, this venue offers destination retailers from an impressive selection of brands including Aerie, Ann Taylor, Build-a- Bear, H&M, Lego, Sephora, Vans, and Victoria's Secret. North Point also possesses the only Georgia-based AMC Theatre with Dolby Cinema and IMAX at the same location.

SECTION 2: SHOPPING CENTER INFORMATION

Shopping Center Management

Management Team

Nick Nicolosi	General Manager	770-200-1249	NNicolosi@trademarkproperty.com
Patrick Hill	Operations Manager	770-200-1245	PHill@trademarkproperty.com
Terri Sallee	Property Management Specialist	770-200-1246	TSallee@trademarkproperty.com
Tracey Williams-Bluebutterfly	Specialty Leasing Rep	678-910.8491	THatley@bluebutterflyllc.com
Allison Black	Office Assistant	770-200-1242	ABlack@trademarkproperty.com
Jerry Brock	Security Director	770-200-1255	JBrock@andyfrain.com
Drenia Baynard	Assistant Security Director	770-200-1256	DBaynard@andyfrain.com

Management Office Location & Address

North Point Mall
1000 North Point Circle
Alpharetta, GA 30022

Management Office Hours

Monday through Friday	8:30 a.m. – 5:00 p.m.
Saturday and Sunday	Closed

Rent Payments

All rents and charges are due on the first day of each month. Rent payments should be forwarded to:

REEP-RTL NPM GA LLC
P.O. Box 22708
New York, New York 10087

Emergency Phone Numbers

Management Office:	770-740-8636
Security Central Station:	770-200-1250
Alpharetta Police Station:	678-297-6300
Alpharetta Fire Department:	770-297-6270
US Postal Service:	770-569-9818

Shopping Center Hours Information

Operating Hours

North Point is open for business on the following schedule:
**Holiday hours vary*

Monday through Thursday	11:00 a.m. – 7:00 p.m.
Friday through Saturday	11:00 a.m. – 8:00 p.m.
Sunday	12:00 p.m. – 7:00 p.m.

During inclement weather conditions, Management closely monitors existing and forecasted conditions to determine if a change in center hours will be required. In all decisions affecting center hours, the safety of customers, and store employees is paramount.

If Management decides to not open, open late, or close the mall early due to weather conditions or other events, direct communication to our retailers will be made via our Emergency Notification Systems, One Call Now. The management team may supplement this system with additional emails, phone calls, and memos to its tenants.

All stores are expected to operate during the hours the Shopping Center is open for business. Any requests to operate otherwise should be directed to Management. If any store does not operate by the hours set by the Shopping Center, the store is subject to citations.

Shopping Center Door Hours

Main Entrances:

Monday – Thursday	10:00 am – 7:00 pm
Friday – Saturday	10:00 am – 8:00 pm
Sunday	11:00 am – 7:00 pm

Corridors:

Sunday – Thursday	8:00 am – 7:00 pm
Friday – Saturday	8:00 am – 8:00 pm

All employees, who wish to enter the Shopping Center while the Shopping Center doors are locked, must do so at Security's Central Station which is located in Delivery/Loading Area 2, between Macy's and the former American Girl store. In addition, employees must show identification and sign the "Non-Business Hours Shopping Center Access Log" at the Security Desk. This is for safety reasons in the event of an emergency.

NOTE: The above schedule is subject to change during the Holiday Season.

Holidays

The Shopping Center is closed to observe the following holidays:

Easter Sunday
Thanksgiving Day
Christmas Day

Shopping Center Amenities

Public Restrooms
There are two sets of public restrooms at North Point Mall. All restrooms include diaper-changing stations. The locations are as follows:

- Upper level in the Food Court (Includes Family Restrooms and Breast-Feeding Room)
- Lower Level next to Auntie Anne's and Cinnabon

Wheelchairs
Wheelchairs are available and can be checked out and returned by contacting Security at 770.200.1250.

Stroller Rental
Single Strollers are located on the Lower Level at the parking deck entrance and the east court entrance. Double Strollers are located on the Upper Level next to the Dino Safari Exhibit. Customers seeking stroller vending refunds can email at smartecarte.com/refund.

Parking Garage
North Point Mall provides a free four level parking experience in our parking deck located near Cheesecake Factory and Dillard's.

Electric Car Charging Stations
There are four Volta Charging Stations for electrical cars located near AMC Theatres and four near The Cheesecake Factory.

Shopping Center Directories
Shopping center directories are located at all four mall entrances and each of the mall's courts.

Customers and tenant employees can also find the directory online at www.northpointmall.com.

Automated Teller Machines
ATMs are located on the Lower Level at East Court and on the Upper Level at the Food Court.

Vertical Transportation
Escalators are located at East Court, Center Court, and West Court. Elevators are located at Center Court and East Court. Freight elevators are located throughout the property in the service courts.

Public Transportation
MARTA offers bus service from the North Springs station to North Point Mall. Take Route 140 to the Mansell Road Park & Ride for convenient parking. http://www.itsmarta.com/

No Smoking Policy

North Point Mall is a smoke-free facility. Smoking is prohibited in all interior spaces including individual stores, restrooms, service corridors, back rooms, near entry doors, etc.

SECTION 3: SECURITY, SAFETY, EMERGENCIES

Security Central Station

Security Central Station is located in Service Court 2 between Macy's and the former American Girl space. It is open 24 hours a day, seven days a week to assist you with any security related issues. Security can be contacted at 770.200.1250.

Safety Guidelines

Emergency Contact Form
Tenants must fill out a Tenant Information Form upon opening and must also notify Security of any new personnel that needs to be added/removed from this list.

One Call Now
Each tenant's emergency contact information is entered into the property's Emergency Notification Systems, One Call Now. This system enables Management and Security to immediately broadcast important information to all stores simultaneously via telephone, text message, and e-mail.

Tenant and Emergency Contact Changes and Updates
It is important for tenants to update Management with current cell phone numbers and emails for General Managers, Assistant Managers, Key Holders, and Regional/District Managers. Please send an email to NPAdmin@trademarkproperty.com whenever information for store management personnel changes.

Security Escorts
Upon request, a Security Officer will escort you to your vehicle. Depending on the volume of calls or possible emergency response, some delay may be unavoidable.

Lost Children / Amber Alert
Security personnel will immediately assist in locating any child reported lost on Shopping Center property. Please alert the nearest Security Officer if a child has wandered off.

Auto Assistance

North Point's Security personnel can assist motorists on mall property with the following services:

- Jumpstarts – If your battery fails, contact Security for their assistant. Or they will refer a towing company to help with a stalled vehicle. **There may be a fee for this service which would be the vehicle owner's responsibility.*
- Lost Vehicles – If you cannot locate your vehicle, or have forgotten where you have parked, Security will be happy to assist you in locating your vehicle.
- Police Assistance – The Security Office can immediately contact the appropriate police agency if necessary or requested.
- Towing – If further assistance is needed, the Security Office can contact A-Towing at 404-577-8950 to take your car to an auto shop. **There may be a fee for this service which would be the vehicle owner's responsibility.*

Whether you are inside or outside the Shopping Center, our Security Officers are always available. Please do not hesitate to ask for assistance.

Lost & Found Procedures

The lost and found is located at the Management Office, located on the lower level at the East Court entrance.

1. Lost and found items can be turned in to the Management Office or a Security Officer.

2. Person(s) claiming lost items must present proper identification such as a photo I.D. and a signature.

SECTION 4: RULES & REGULATIONS

Tenant Employee & Overnight Parking Policies

The Center requires all tenant employees to park in designated tenant employee parking areas during their work hours. This includes vehicles which are used to transport displays or event elements. Parking rules are enforced by North Point Security.

Please refer to the (attached) map to shaded areas which denotes parking areas for tenant employees. It is the obligation of each tenant to share this information with their respective staff members. Tenant employees parked outside the designated Employee Parking Area may be asked to move their vehicle to a designated Employee Parking Area or towed at the vehicle owner's expense.

Overnight parking is not permitted. If a need arises for overnight parking, please notify Security at 770.200.1250 to prevent the vehicle from being towed. Any towing is at the vehicle owner's expense and the center will not be responsible for any damages that may result.

Common area

Shopping center common area consists of all walkways, corridors, sidewalks, stairways, vertical transportation, restrooms, parking lots, trash rooms, loading docks, etc. Any use of the common area requires approval from the Management office. This includes any signs displayed beyond the lease line.

Miscellaneous Rules & Regulations

1. All trash, refuse and waste material shall be regularly removed from each store. Until removal, it shall be stored (1) in adequate containers; containers shall be located so as not to be visible to the public in the Shopping Center and (2) so as not to constitute any health/fire hazard or nuisance to any occupant, including rear corridors.

2. No portion of the center shall be used for lodging purposes.

3. Neither sidewalks nor interior Shopping Center walkways shall be used to display, store, sell or place any merchandise, unless approved by Management.

4. No advertising medium, device, instrument, or apparatus shall be utilized which can be heard or experienced outside of premises, including flashing lights, searchlights, stereo equipment, radios, televisions, or monitors.

5. No auction, fire, bankruptcy, or going-out-of-business sale shall be conducted in, at, or about the center or any portion or portions thereof, except pursuant to court order.

6. No use shall be made of the center which would (1) violate any law, ordinance, or regulation, (2) constitute a nuisance, (3) constitute a hazardous use, or (4) violate, suspend, or void any policy or policies of insurance.

7. No radio, satellite, or television aerials shall be erected on the roof or exterior walls of the leased premises without prior written consent of the Landlord.

8. All stores shall keep their display windows illuminated and the signs and exterior lights on during Shopping Center hours.

9. Store employees shall not solicit business in the parking lot or other common areas nor shall store employees distribute any handbills or other advertising matter in or on automobiles parked in the parking lot without Management approval.

10. For the safety of our patrons, no ladders or other obstructions are allowed in the common area during Shopping Center hours. This includes window-washing equipment.

11. No awning or other projections shall be attached to the outside walls of the leased premises or the building of which they form a part without Management approval.

12. The use of balloons is not allowed unless previously approved by Shopping Center management.

13. No inventory should be within eighteen (18) inches from a sprinkler head and all inventory in back rooms cannot block electrical panels at any time.

Sign Regulations

1. All signs must be professionally manufactured. Hand-printed and painted signs of any type are not allowed unless approved by Shopping Center Management.

2. Signs cannot be taped or otherwise affixed to the glass panes, doors, support columns, or exterior walls of the store.

3. All signs must pertain to merchandise sold in the store. No signs for outside activities are allowed. If a community group comes to your store asking to put up a sign for a group activity, please refer them to the Management Office.

4. Sign standards and placards are not allowed outside the lease line of a store. The lease line is defined as that area which is the boundary line separating the rental premises from the Shopping Center common area.

5. Foul or profane language is not permitted on storefront or visible from the common area.

6. Painted windows are not permitted.

7. Nothing, including signs, should ever be attached to or obstruct the sprinkler heads.

8. No banners, pennants, insignias, etc., may be attached to, or across, the store front, placed in the windows, or hung from the ceiling, closer than five feet from the lease line.

9. All tenants shall refer to their lease for any signage requirements.

Please feel free to call the Management Office should you have questions or need clarification on the signage guidelines at 770-740-8636.

Care of premises

During the term of the lease, merchants are required to maintain their stores in the highest standards, and make necessary repair to their stores, including all plumbing, sewage and heating facilities, fixtures, interior walls, floors, ceilings, sides, windows, doors, plate glass, showcases, all electrical facilities and equipment, including lighting fixtures, lamping, fans and electric motors, all other appliances and equipment of every kind and nature, all landscaping upon or attached to the store, and all vestibules, entrances and returns located within the store. Merchants are not to add vending machines without the written permission of the Landlord.

Storefront Maintenance

Each store is responsible for maintaining its own storefront or contracting a cleaning service. Glass windows should be washed, windowsills and ledges dusted, sign-tops and awnings cleaned on a weekly basis, and carpet or flooring cleaned on a quarterly basis. All maintenance must be performed during non-operating hours. Contracted vendors must also provide a certificate of insurance to the Shopping Center. For more information, please contact the Management office at 770-740-8636.

Inventory

Tenants requiring access to their stores before or after hours for inventory should notify the Management Office. All store inventory requests must be in writing with a minimum of 72 hours' notice or as specified in your lease. Please contact the Management Office for a *Before/After Hours Request Form.*

NOTE: Stores planning on closing during business hours for inventory must have a written request submitted by their corporate office.

Use of Service Courts

North Point has seven service courts located around the mall and are for the sole purpose of loading and unloading merchandise. Any other use of these areas is not permitted at any time. There are six (6) freight elevators (Appendix C); which service upper-level stores. The operating instructions are posted at each elevator **(These elevators are <u>not</u> for customer use).** All deliveries must be made through service corridors and back doors unless your store does not have a rear entry or access to a service corridor. If your space does not have a rear entry all deliveries must be made prior to or after Shopping Center hours.

Delivery Regulations

1. Delivery personnel must abide by all zone limits.

2. All delivery personnel must abide by North Point Mall's established code of conduct. Personnel in violation of the code of conduct will be dismissed from the premises.

3. Delivery personnel shall refrain from using passenger elevators and escalators to transport deliveries. Violators will be dismissed from the premises.

4. All deliveries that are brought through the common area will be carried on a two (2) wheeled upright dolly with rubber wheels. In the event any other piece of equipment is needed to transport goods, management approval is required.

5. Packages **must not** be stacked above eye level.

6. Delivery docks are not parking zones and are for the use of loading or unloading of goods. Vehicles left unattended may be towed at the car owner's expense.

7. No pallet jacks are permitted in the common area at any time.

If you have any questions regarding deliveries, please feel free to contact the Operations Manager at 770.200.1245.

Insurance

Each tenant should reference their lease to see all required insurances such as General Liability, Workers' Compensation, etc.

SECTION 5: OPERATIONS & CONSTRUCTION

Air Conditioning Units and Roof Access

Any contracted company or their workers must complete the following items, before they will be allowed access to the roof:

1. Each company will need to provide the Shopping Center with a certificate of insurance. Appendix D lists contractors' insurance requirements.

2. All service employees will be required to show Security a valid form of I.D. prior to getting permission to access our roof. Security will hold onto their identification until they return from the roof. All roof work must be completed prior to the sun setting. No roof work will be allowed at night.

3. Once the service technicians are on the roof they must:
    - Clean up any trash and/or debris.
    - All bottles of refrigerant or other products must be removed from the roof.
    - If changing out an AC, the old AC must be removed from the roof.

Each individual store is responsible for the proper maintenance and care of its VAB Box air conditioning unit. In accordance with the lease, each tenant shall contract with a certified service company for maintenance of the heating and air conditioning equipment. If the tenant is served by Landlord's central system of air conditioning, contact Operations at 770.200.1245 and they will arrange for service.

Trash Disposal

North Point Mall has seven areas for trash disposal (map attached). Areas are equipped with compactors, and operating instructions are posted at each location. Please dispose of trash in the landfill compactor and cardboard in the cardboard-only compactors. Merchants are required to break down all boxes before discarding. Merchants should use trash areas closest to their store. Stores on the upper level should use the service elevators to get to the lower-level trash areas.

Each merchant is required to deposit refuse into the compactors. Absolutely no trash is to be left in corridors, elevators, common area trash receptacles or outside trash compactors. All food stores must put their trash in plastic bags. Center maintenance personnel are not responsible for trash in areas due to tenant negligence. Inspection of trash areas are made daily, and the Fire Department issues citations for violations. Management may issue fines also.

Pest Control

The Shopping Center contracts for pest control service for the entire Shopping Center. The service handles any problems dealing with rodents and insects in the common area. Each tenant is obligated to maintain its own space unless otherwise dictated by the lease. All tenants should reference their leases to determine their specific pest control requirements. If you are having an unusual pest problem, contact Operations, 770.200.1245 and they can assist.

Construction and Remodeling

Before making **any** store alterations, improvements, or additions, please check your lease to determine whether consent of the landlord is required. Examples of items requiring landlord approval are:

- Changes to paint or carpet color
- Changes to the storefront
- Changes to the façade sign
- Physical alterations to the store interior, i.e., changing the lighting, moving the cash-wrap, adding shelves, moving dressing rooms, etc.

Please contact the General Manager at 770.200.1249 for any proposed changes.

Fire Inspections

For your protection, the Alpharetta Fire Department makes regular inspections of North Point Mall premises. The following is a list of the most frequent violations that the Fire Department issues citations for:

1. No merchandise is to be stored within 18 inches of the ceiling sprinkler heads.

2. If your store has ceiling tiles, all tiles must be in place.

3. Stores equipped with their own smoke detectors should be checked at least once a year to be sure it is working properly.

4. No trash is to be left in the corridors, elevators, stairwells, or outside the trash compactors.

5. There should be nothing blocking the rear exits or rear corridors of your store or the back walkways of the Shopping Center.

6. All rear corridor automatic door closers must be in proper working condition. These are fire doors.

7. If your store has a rear exit, the exit signs must be clearly readable from anywhere in the store.

8. If your store has emergency lighting, you must be sure it is in proper working condition.

9. All tenants are required to have one working fire extinguisher. Make sure that all employees know where it is located and how to use it properly.

10. All tenants must have at least one unblocked aisle from the front of the store to the rear of the store that is a minimum of three feet wide.

Operational Issues

Call Operations at 770.200.1246 for air conditioning problems, electrical problems, sprinkler malfunctions, broken elevators and escalators, water leaks, plumbing problems or other emergencies.

SECTION 6: MANAGEMENT SERVICES

In-store Events

- In-store events notifications are required for any activity before, during or after property hours and must be submitted fifteen (15) days prior.
- All in-store events notifications must be submitted via email to the management office at tsallee@trademarkproperty.com.
- Details about the event/party (time, number of people expected, what type of event, how promoted/advertised, etc.) must be included.
- If there is a possibility of a large crowd and overflow into the common area, Management will advise if any city permits, or additional forms are required.
- Some in-store events may require a city permit to be inside your store.
- If the event will have alcohol, even if it is inside your store only, an additional certificate of insurance will need to be sent to the management office prior to the event.
- Should an event/party not be coordinated with the management office in advance, the store will be back-billed any time that Shopping Center security personnel is needed to help control the event.

Please feel free to call the Management office should you have any questions or are unclear as to the guidelines at 770.740.8636.

Retailer Consultations

Contact Management, 770.200.1246, to discuss additional opportunities available to your store. The Management Office can act as a liaison to Trademark's Marketing and Experience departments, which handle all marketing material available to Shopping Center tenants.

Marketing Opportunities

Online Marketing
Management can promote your in-store sales, events, and promotions on our website and social media. Email your request to tsallee@trademarkproperty.com and include verbiage and high-res graphic.

- **Social Media:** Follow us and like us at**:**

  Facebook: www.Facebook.com/NorthPointMall
  Instagram: https://www.instagram.com/northpointmall/
  Twitter: www.Twitter.com/northpointmall

- **Website:** www.NorthPointMall.com

Monthly Email Blasts
Marketing maintains an email database of North Point customers through our "Insider" program. Customer Newsletters are sent at the beginning of each month. Please email any promotions you would like included for the upcoming month to tsallee@trademarkproperty.com.

Please include a logo, product images, and verbiage.

Public Relations & The Media

North Point Mall is committed to open, honest, and timely communication with the media. We believe it is in our best interest to be cooperative, and we consider media inquiries opportunities to convey our messages to the public. To this end, we have a trained staff of professionals whose priority it is to represent the center in the best manner possible.

Appendix A
General Shopping Center Map
Lower Level

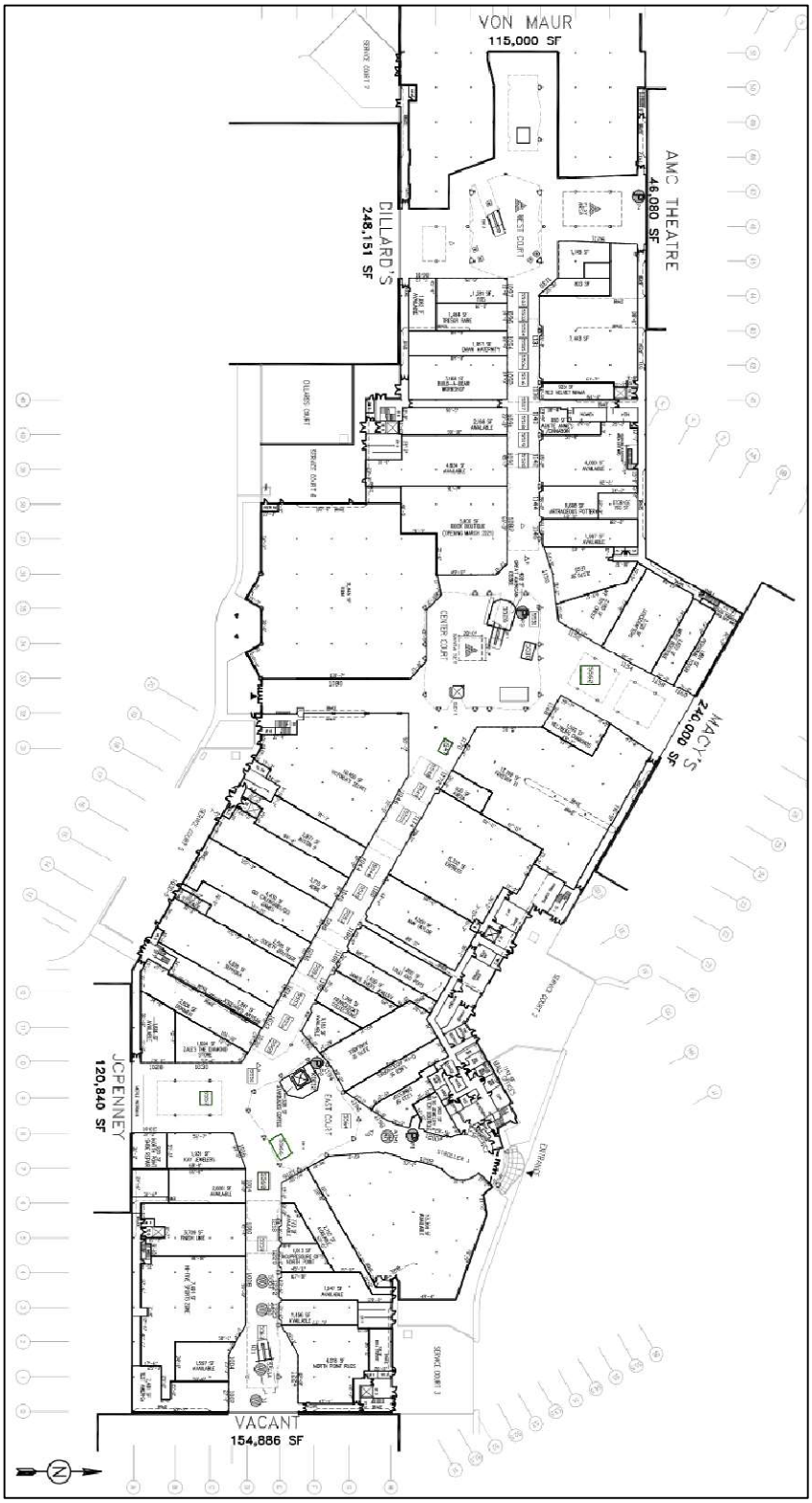

Upper Level

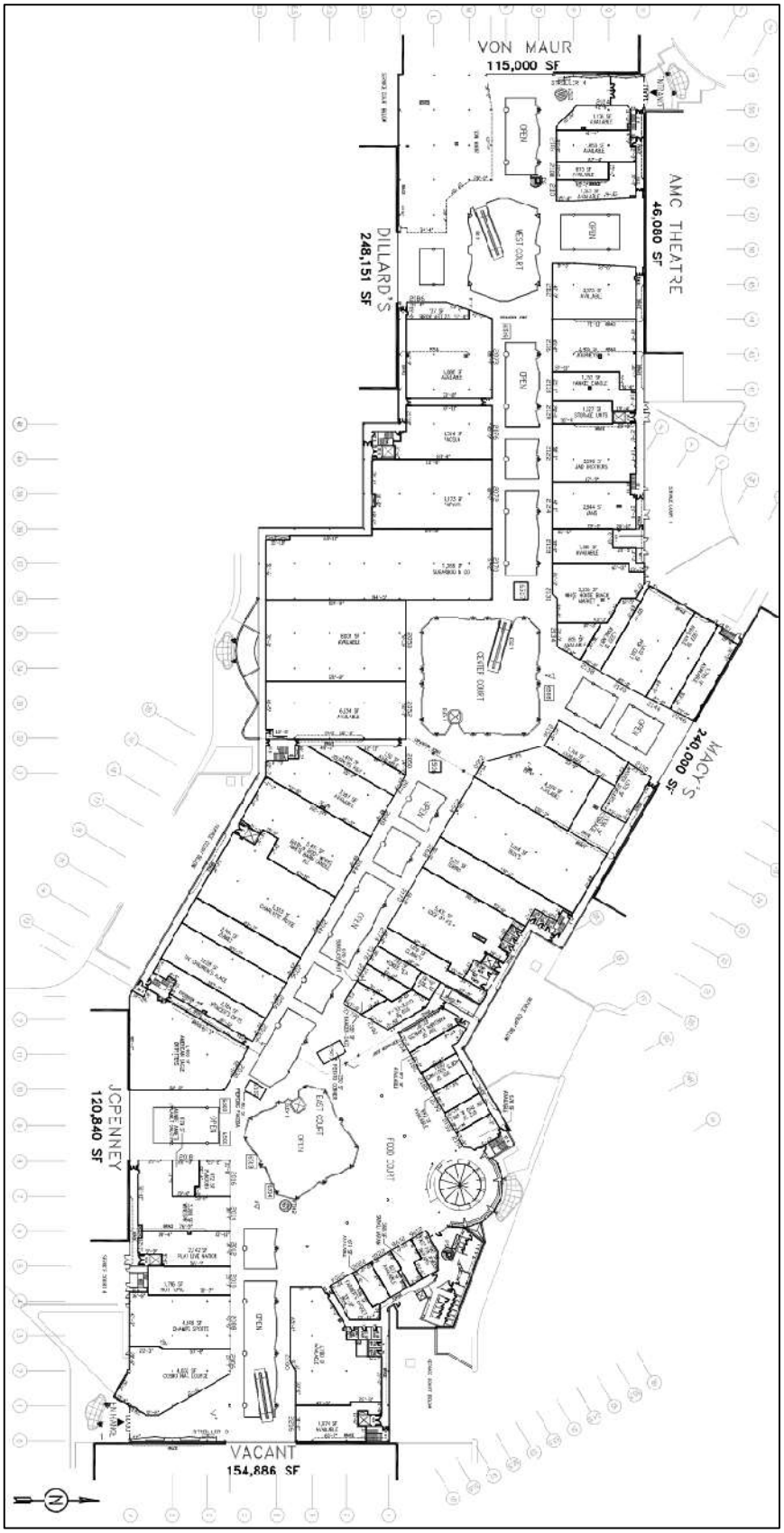
VON MAUR
115,000 SF
AMC THEATRE
46,080 SF
DILLARD'S
248,151 SF
MACY'S
240,000 SF
JCPENNEY
120,840 SF
VACANT
154,886 SF
WEST COURT
CENTER COURT
EAST COURT
FOOD COURT
OPEN

Appendix B
Parking Map

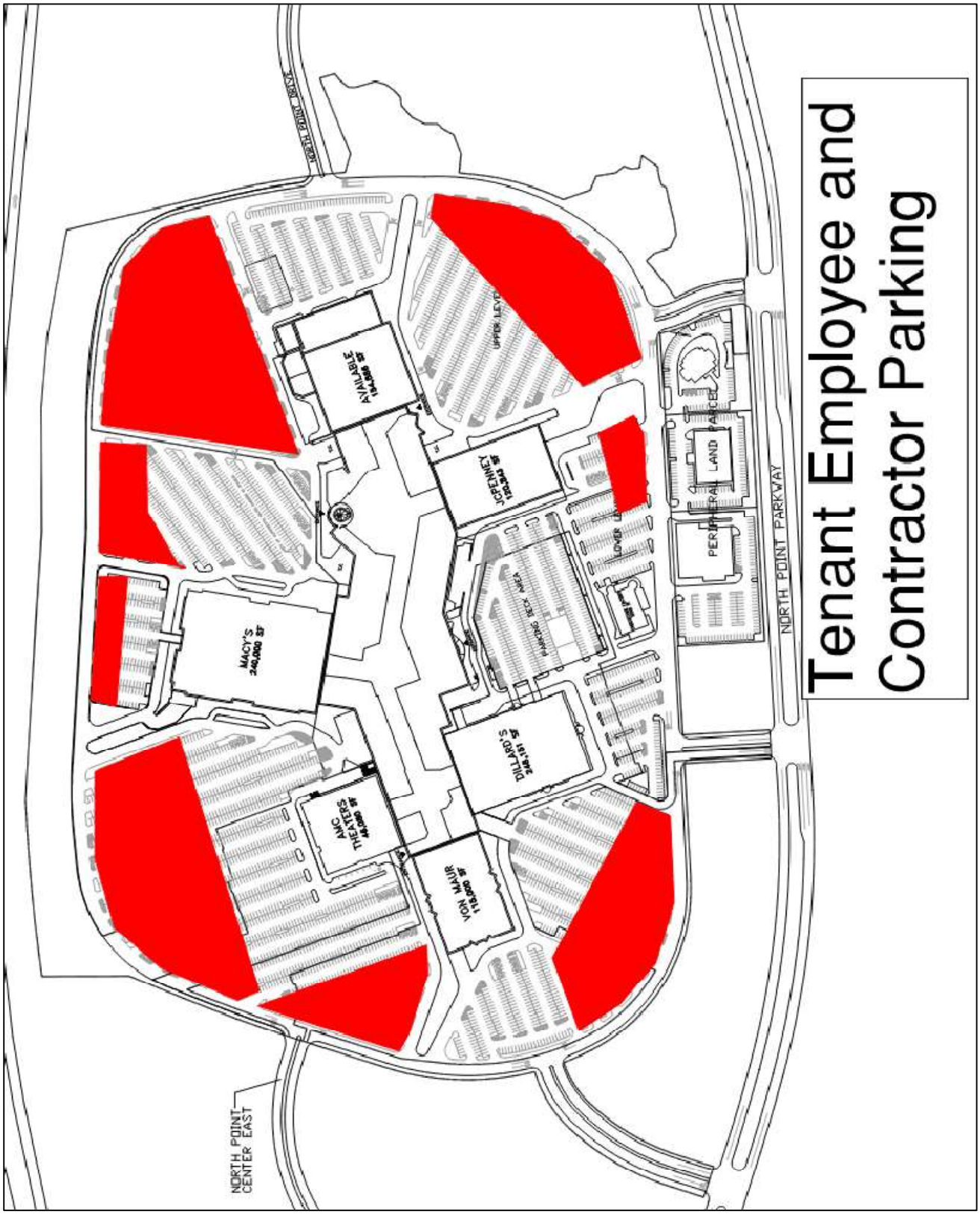

Appendix C
Delivery Zones & Freight Elevators

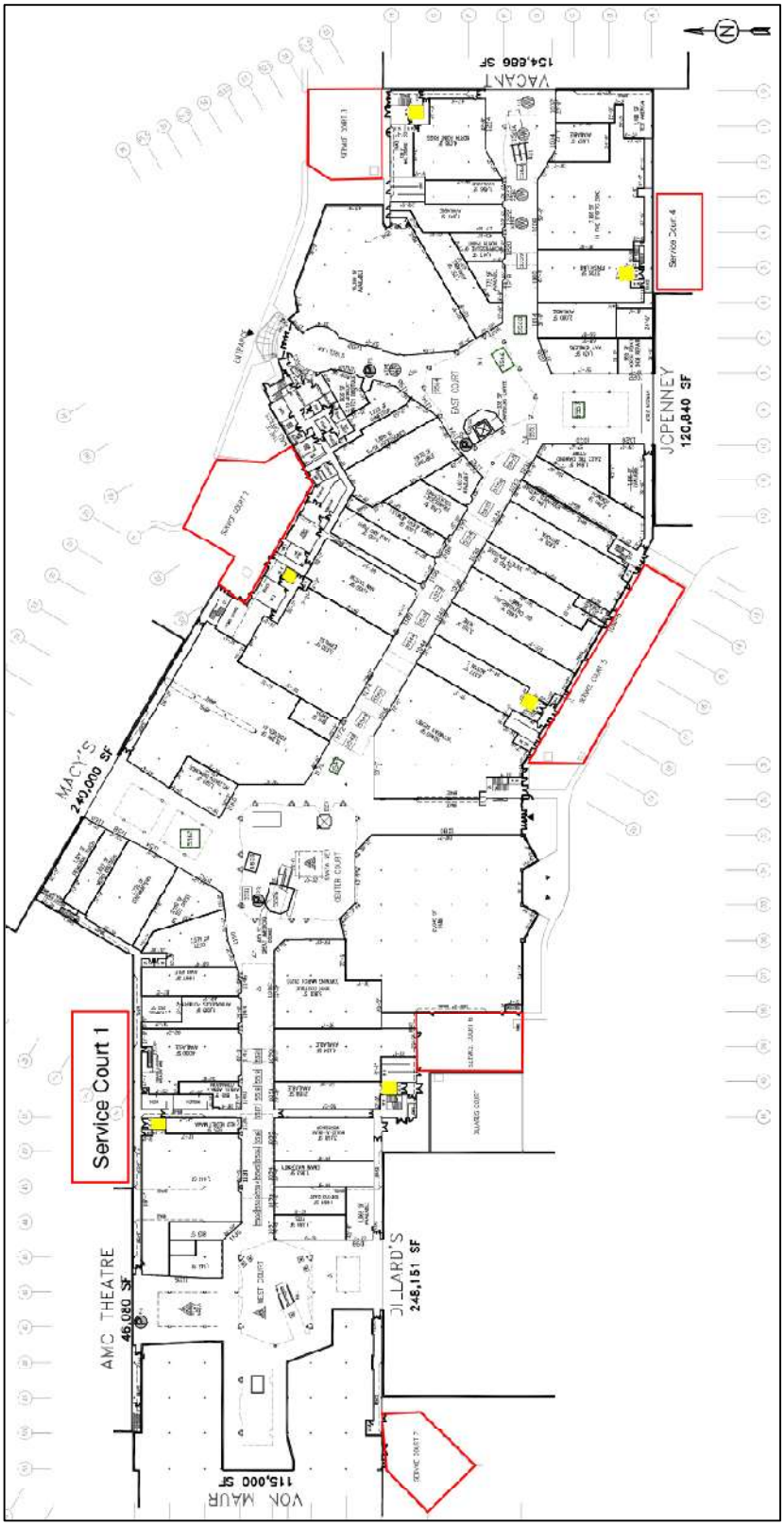

Appendix D
Contractors' Insurance Requirements

INSURANCE REQUIREMENTS FOR CONTRACTORS/VENDORS

- *Certificate Holder:*

  REEP-RTL NPM GA LLC
  North Point Mall
  1000 North Point Circle, Alpharetta, GA 30022

- *Insurance Coverage Requirements*

1) Contractor/Vendor will procure and maintain, at its own expense, the policies of insurance listed below, per the additional insured requirements listed below, for all of its operations and completed operations on the Certificate Holder's premises.
2) Insurance Carrier(s) from whom Contractor/Vendor procures the required policies of insurance must meet AM Best A- VII Rating.
3) All policies of insurance required by this agreement shall state that they are primary and not additional to, or contributing with, any other insurance carried by, or for the benefit of the Additional Insureds.
4) All policies of insurance required by this agreement shall waive rights of subrogation against the Additional Insureds.
5) Tenant Contractor shall provide a Certificate of Insurance evidencing that these Insurance Coverage Requirements have been met prior to commencement of any of its operations on the Certificate Holder's premises. Tenant Contractor is to be listed as the Insured on the certificate. Tenant Name and Location where the work is being performed should also be referenced on the certificate.
6) **Additional Insured Requirements (must be stated on COI):**
   Trademark Property Company TPC GP LLC
7) **Each of these entities are to be named as Additional Insureds on all Policies of Insurance**
   except for Workers Compensation and Employers Liability (must be stated on COI):
   a) **Trademark Management, Ltd,**
   b) **Trademark Property Services**
   c) **REEP-RTL NPM GA LLC**

Commercial General Liability

EACH OCCURENCE	$1,000,000
GENERAL AGGREGATE	$2,000,000
PRODUCTS / COMP OPS AGGREGATE*	$2,000,000
PERSONAL & ADVERTISING INJURY	$1,000,000

Policy limits are to apply per project or per location.
This requirement can also be met using a combination of Commercial General Liability and Umbrella Liability.
* Extending for 3 years.

Automobile Liability	$1,000,000 Combined Single Limit
Workers' Compensation	Statutory
In Monopolistic States*	Evidence of Monopolistic State Coverage
Employers' Liability	$100,000 Each Accident
In Monopolistic States**	$100,000 Disease, Policy Limit $500,000 Disease, Each Employee $500,000 Occurrence/Aggregate Stop Gap

** Monopolistic states include NV, ND, OH, WA, WV and WY.

Requirements shown above also apply for Contractor's subcontractors / sub-consultants.

THE
ALPHARETTA
SPOTLIGHT
COMMUNITY
STAGE

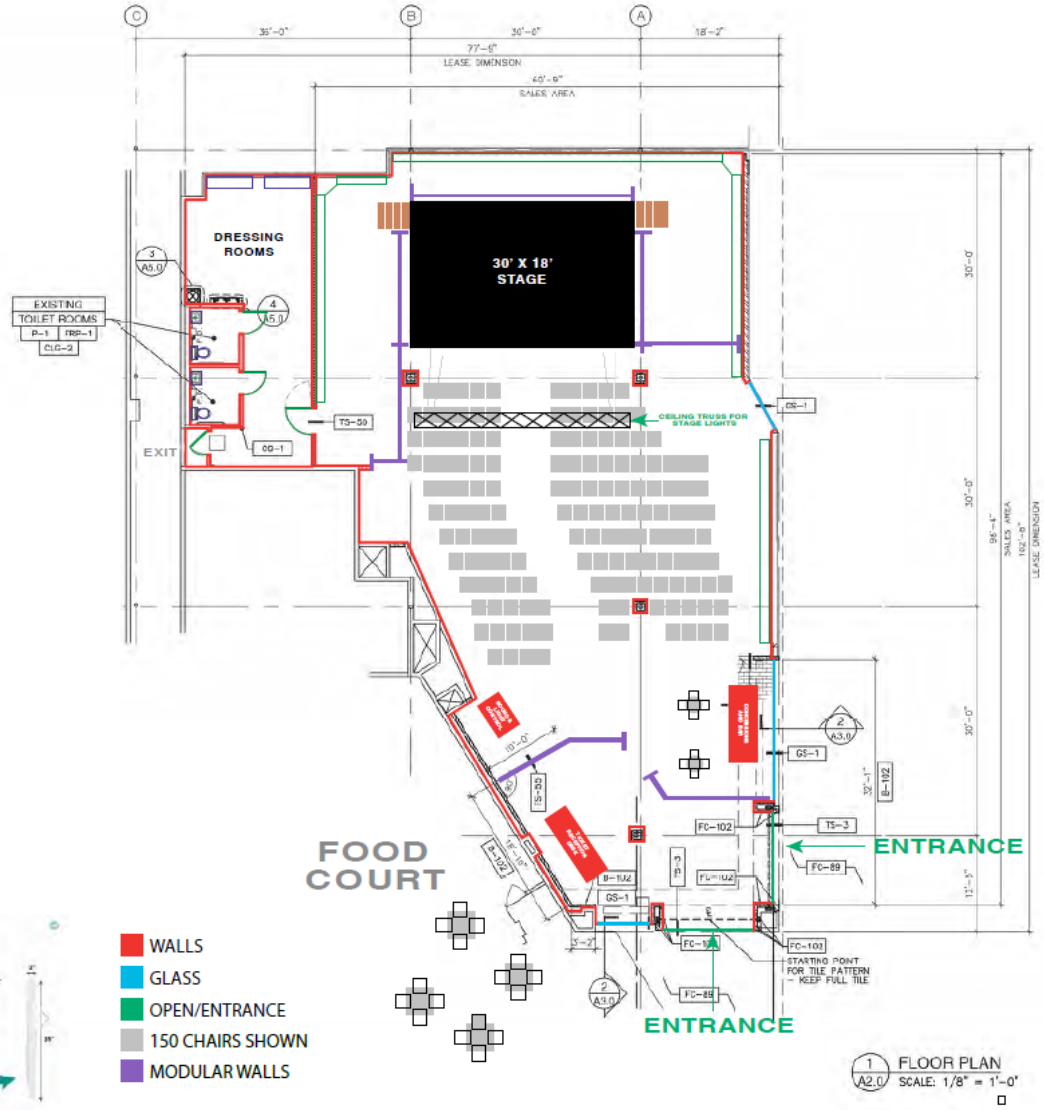

- WALLS
- GLASS
- OPEN/ENTRANCE
- 150 CHAIRS SHOWN
- MODULAR WALLS

THE
ALPHARETTA
SPOTLIGHT
COMMUNITY STAGE
COMING SOON

THE
ALPHARETTA
SPOTLIGHT
COMMUNITY STAGE
COMING SOON

Your Community Theater
Help us celebrate and shine a spotlight on the rich, diverse and creative talent we have in Alpharetta.
ALPHARETTA

Community Theater at North Point Mall - Performance Groups / Feasiblity Discussion / 02_24 UPDATED

Group	Non-Profit	Performance Locations	Rehearsal Locations	Feasible to Move to Mall	Number of Yearly Shows & Performances	Potential Yearly Revenue
ACT1 Theater	Yes	Alpharetta Presbyterian Church; Parks, Arts Center Black Box	Alpharetta Presbyterian Church; Parks, Arts Center Black Box	Yes - Rehearsals & Performances	2023-2024 Season 6 shows / 36+ performances listed https://act1theater.org/2023-2024-season	$1,500.00
City Center Players	Yes/No - Have they filed?	Alpharetta Arts Center	Arts Center	Yes - Rehearsals & Performances	Live Theater & Youth Theater / 2023-2024 Season TBD but possibly 6 shows / 36 shows https://citycenterplayers.com/	$6,000.00
The Pretenders	N/A	Adult Activity Center Acting Group	Alpharetta Adult Activity Center	Not Likely, but possibly in 2024	1	$0.00
Start a NEW Children's Theater and/or Camp (ACT1- TBD)	TBD	TBD	TBD	TBD	TBD	$4,500.00
Alpharetta Symphony Orchestra & Youth Symphony Orchestra	Yes	Churches, Brooke St Park, Preston Ridge, etc.	Preston Ridge	Possbily for smaller performances	4	$2,000.00
Alpharetta City Band	Yes	Assisted Living Facilities, Churches, Brooke St Park, Preston Ridge, etc.	Preston Ridge	Possbily for smaller performances - i.e. The Jazz Band	4	$2,000.00
Alpharetta Community Chorus	Yes	Alpharetta Methodist Church	Alpharetta Methodist Church	Possibly in ronturnda area of mall, but not in new theater due to ceiling height	Doubt they would move out the church set up for tiered seating for chorus format	$500.00

				ceiling height		
Metropolitan Ballet	Yes	Metro Ballet Facility	Metro Ballet Facility	Not Likely, but could ask for smaller performances with children	TBD	$1,000.00
Music Match Performances	N/A	Mostly downtown	N/A	N/A	Possibly a musician for a special event or playing in rotunda areas when mall is busier.	0
Movie Star Camp	N/A	Alpharetta Arts Center	Arts Center	Yes– final	1 to 2	$2,500.00
Rock Band Camp	N/A	Arts Center Terrace or Black Box	Arts Center	Maybe but very loud	2	$2,000.00
Dance Recitals from Rec Program	N/A	Alpharetta Rec Center	Alpharetta Rec Center	Yes	4 to 6	0
Improv Classes & Performances	TBD	Alpharetta Arts Cetner	Alpharetta Arts Center	Yes	TBD- new group	$1,500.00
Sideways Dance Company	N/A	Alpharetta Arts Center	Sideways Dance Company	Yes- performances	2	0
Third Party Rentals					6	$18,000.00
					Approximately Performances by 2025-2026	**$41,500.00**

Theatre Denton Annex at the Golden Triangle Mall Dallas-Fort Worth Texas https://theatredenton.com/venue/theatre-denton-annex-at-golden-triangle-mall/

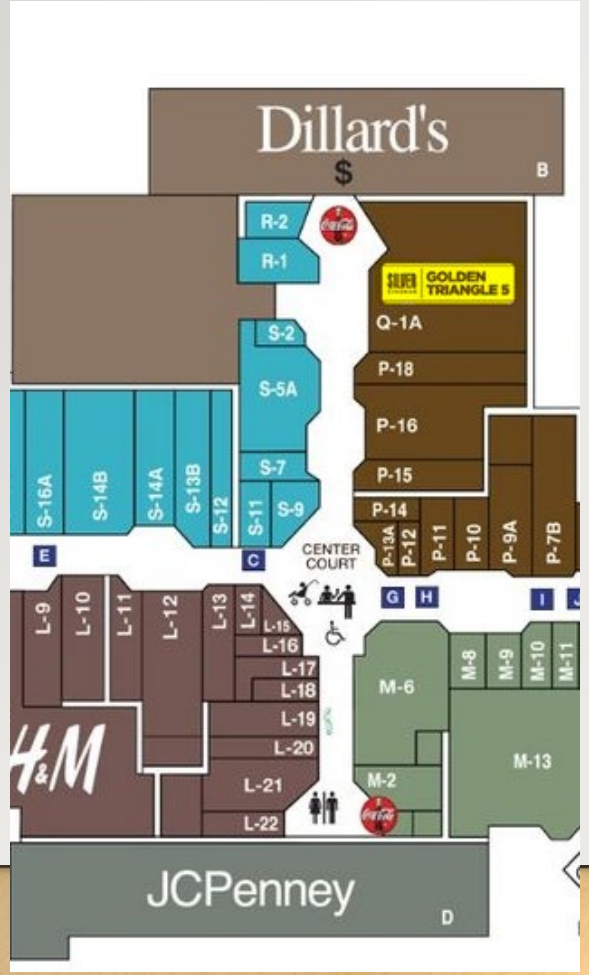

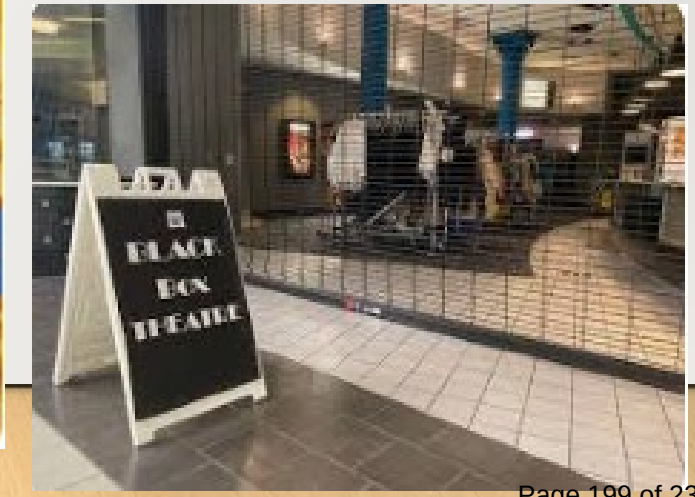

Theatre Denton Annex at the Golden Triangle Mall

Experimental and progressive theatre is on the rise in Dallas-Fort Worth, and Theatre Denton is happy to be home to some of the best. The Theatre Denton Annex space, made possible by the Golden Triangle Mall, features Denton's most independent and experimental theatre. Up-and-coming writers, directors, and actors are showcased there.

The Annex is an intimate theatre space, perfect for a variety of performances. Come enjoy a new play from a soon-to-be superstar playwright, or watch some of Denton's most talented directors hone their craft in action. It is also home to our Theatre School and costume shop. Included are a screening room and a rehearsal hall as well.

The Annex is located next to Dillard's in the old movie theater in the Golden Triangle Mall. Tickets for these performances will be available prior to the show's opening date at the Campus Theatre Box Office from 1pm-5pm, Monday through Friday. General admission tickets to each performance are $15. Tickets for all Black Box productions will also be made available on our web site. Its uses include:

Theatre Denton rehearsal space
Theatre Denton Theatre School
Lona Wolfe Costume Closet
Theatre Denton Productions on the Phill Gallivan stage.

Find My Tickets Check Flex Credits

1. Buy tickets to an event.

Dreamgirls (April 5, 2024 - April 21, 2024)	Choose a Date
Motherhood 3 - Footlight Follies - DENTON CLASSICS (May 10, 2024)	Buy Tickets
Motherhood 3 - Footlight Follies - FROM THE HEART (May 11, 2024)	Buy Tickets
Motherhood 3 - Footlight Follies - THE SOUNDS OF MUSIC (May 12, 2024)	Buy Tickets

2. Buy a ticket package.

O. Gift Certificate 2 Adults	Buy Package
P. Gift Certificate - 2 Seniors	Buy Package

My Cart

Your cart is currently empty.

Group Information

Theatre Denton
214 W. Hickory
Denton, TX 76201
940.382.1915

2. Buy a ticket package.

O. Gift Certificate 2 Adults	Buy Package
P. Gift Certificate - 2 Seniors	Buy Package

3. Make a donation.

A. Theatre Denton Membership	Donate
I. Campus Theatre Seat Plaques	Donate
I. Darby Barrow-Brady Memorial for Theatre School Tuition Assistance	Donate
J. Campus Theatre Lobby Star	Donate

Theatre School

Cast and crew of 13 Signs You Should Stop Being a Pirate, December 2022

Welcome to Theater School, where the magic happens! With over 25 years of experience, we're experts at unleashing the creative power of young artists aged 4 to 17. Join our vibrant community and dive into a world of fun-filled options, including awesome classes, epic camps, and spectacular productions. Let Theater School be the stage where your child's imagination soars. Get ready for an exciting adventure!

THE
ALPHARETTA
SPOTLIGHT
COMMUNITY
STAGE

STAFF REPORT

Department: Recreation, Parks & Cultural Services
Submitted By: Kim Z. Manning
Meeting Date: April 15, 2024

AGENDA ITEM:

Grant Agreement: Arts Alpharetta and Bi-Yearly Outdoor Sculpture Exhibit / Art On-Loan Project
Consideration and approval of the FY2024-2025 bi-yearly agreement between the City of Alpharetta and Arts Alpharetta, Inc., for the curation and installation of a public outdoor art sculpture exhibit and to authorize the mayor to execute all necessary documentation.

STAFF RECOMMENDATION:

Approve, as presented, the FY2024-2025 Bi-Yearly Outdoor Sculpture Exhibit Agreement between the City of Alpharetta and Arts Alpharetta, Inc. for the curation and installation of a (2) year public outdoor on-loan art sculpture exhibit and to authorize the mayor to execute all necessary documentation.

BUDGET & PROCUREMENT:

BUDGETED ITEM: YES

FISCAL IMPACT: YES

INCLUDED IN CURRENT FY CPTL BUDGET: YES

INCLUDED IN CURRENT FY OPRT. BUDGET: NO

TOTAL PROJECT COST: EACH YEAR, THE EXPENSE ASSOCIATED WITH THE BI-YEARLY AGREEMENT (DETERMINED BY CURRENT COSTS FOR DEINSTALLATION, MATERIALS, SHIPPING, NEW INSTALLATION, AND ON-LOAN RENTAL AGREEMENTS WITH ARTISTS) IS EVENLY DISTRIBUTED ACROSS TWO FISCAL YEARS. FUNDING IS REQUESTED EVERY FISCAL CYCLE IN ACCORDANCE WITH THE AGREEMENT; 50% OF TOTAL COSTS REQUESTED IN FISCAL YEAR 1 AND THE REMAINING 50% OF TOTAL COSTS REQUESTED IN FISCAL YEAR 2.

IN FISCAL YEAR 2024, THE DEPARTMENT WAS GRANTED $45,000 IN CAPITAL FUNDING TO CONTINUE THE INITIATIVE. THE DEPARTMENT IS CURRENTLY REQUESTING $45,000 IN THE 2025 FISCAL CYCLE TO CONTINUE FUNDING THE PROGRAM AS WELL AS ADVANCE THE EXHIBIT TO FINALLY ACHIEVE THE ORIGINAL FOOTPRINT AS IMAGINED. SHOULD THE AGREEMENT AND THE RESPECTIVE FUNDING BE APPROVED BY CITY COUNCIL, THE DEPARTMENT WILL HAVE THE APPROPRIATIONS AND AUTHORIZATION TO NOT ONLY REPLACE THE CURRENT (5) SCULPTURES BUT SECURE FUNDING TO FINALLY INSTALL THE REMAINING 2–5 SCULPTURES FOR THE POPULAR EXHIBIT.

APPROPRIATIONS:

ACCOUNT TITLE/NUMBER	DOLLAR AMOUNT
Cultural Services - Public Art On-Loan Program | 30161150-544100-C1807	$45,000.00

EXTERNAL FUNDING SOURCES:

ACCOUNT TITLE/NUMBER	DOLLAR AMOUNT
N/A	$0.00

ITEM DESCRIPTION:

BACKGROUND:
The Department of Recreation, Parks, and Cultural Services partners with Arts Alpharetta, Inc. to curate outdoor and indoor exhibits throughout the City of Alpharetta. In addition, Arts Alpharetta, Inc. serves as our Public Art Review Committee for developers that are given public art conditions by the Design & Review Board overseen by the Department of Community Development.

The Outdoor On-Loan Sculpture Exhibit changes names and themes every two years. The first exhibit, installed 2018 was titled Miscellany, the second exhibit was Omnium Gatherum, and the third, which is currently on display, is Medley.

The Alpharetta Convention & Visitors Bureau, the City of Alpharetta, and Arts Alpharetta, Inc. partner on a Downtown Alpharetta Arts Walking Tour Brochure for the community that includes the outdoor on-loan sculptures as well as permanent sculptures that are available in print and online. In addition, the City's public art is also available on the City's website via a GIS Public Art Map. This allows the public to follow along online to experience City owned and privately owned public art pieces throughout Alpharetta. The outdoor on-loan program is updated on the GIS Public Art Map with each new exhibit.

Due to the challenges presented from the COVID pandemic, the outdoor on-loan exhibit was scaled back to include only (5) sculptures stationed in Brooke Street Park, Goswick Park, and Wills Park. To date, the exhibit's remaining 2-5 sculptures in sections of Downtown Alpharetta and along the Alpha Loop (at Thompson Street) have designated locations but remain unfunded.

THE AGREEMENT:
In 2018, the first agreement with Arts Alpharetta, Inc. was approved for $85,000 to install all sculptures for the exhibit and was intended to be an annual agreement. The recurrence of a yearly project proved too frequent and not sustainable for Arts Alpharetta, Inc. and in 2020, the agreement was revised to a bi-yearly agreement, resulting in a division of the expense across two fiscal years. By 2021, the initiative was scaled back on account of available funding and has yet to receive the funding needed to bring the exhibit back to its original footprint.

The new FY2024-2025 Bi-Yearly Outdoor On-Loan Agreement outlines a total expense of $90,000 for the newest exhibit in the hopes of finally installing all of the sculptures planned for the initiative. $69,500 in available funding currently exists in the Department's capital funds allocated for the initiative and is earmarked as follows:

$6,975	Final payment for the FY2022-2024 agreement.
$45,000	First 50% associated with the FY2024-2025 Bi-Yearly Outdoor On-Loan Agreement (upon agreement approval).
$17,525	Public art maintenance and repairs.

As mentioned above, the Department is currently requesting $45,000 in Fiscal Year 2025 capital funding to fully realize the outdoor on-loan program under the new agreement. Payments would be made in (3) installations as per the agreement and in alignment with fiscal year appropriations.

If the new outdoor on-loan agreement is approved, Riff would be the theme for the fourth exhibit. In conjunction with Alpharetta's "Alpharetta Music City" initiative, Riff represents a repeated phrase in music, free-styling, and an individual artistic expression often described as freelance. RIFF can also be an acronym for Representing Inspiration in Free Form, with a tone of independence within the theme.

The agreement would be valid for a period of (2) years, with the exhibit on display for calendar years 2024-2025,, after which the City and Arts Alpharetta, Inc. may discuss a fifth outdoor on-loan exhibit for Fiscal Years 2026-2027, calendar years 2026-2028.

RECOMMENDATION EXPLANATION:

Staff is in favor of the City's agreement with Arts Alpharetta, Inc. for the bi-yearly outdoor on-loan exhibit. The agreement supports the City's vision of promoting and supporting arts and culture through public art. In addition, art on-loan programs promote transitional art in the City's outdoor environment, intentionally offering new and beautiful art walk opportunities for Alpharetta's vibrant community while also providing the Alpharetta Convention & Visitors Bureau with yet another avenue to promote visitation and tourism.

Lastly, staff recommends the services provided by Arts Alpharetta, Inc. which provides turn-key service for all aspects of the project. Services include all correspondence with artists (ranging from the online call for artists to rental agreements and payments), curation, installation, and deinstallation of the art, and marketing.

ALTERNATIVES:

There are two alternatives to this recommendation:

1. Deny approval of the FY 2024-2025 Bi-Yearly Sculpture Outdoor On Loan Exhibit Agreement resulting in the removal of the (5) current *Medley* sculptures and cessation of the outdoor art on-loan exhibit.
2. Deny approval to incorporate the exhibit's remaining sculptures and direct staff to revise the FY 2024-2025 Bi-Yearly Sculpture Outdoor On Loan Exhibit Agreement to continue with the exhibit as-is.

ATTACHMENTS:

1. Arts Alpharetta Outdoor Art On Loan Agreement

2 PARK PLAZA
ALPHARETTA, GA 30009

CITY OF ALPHARETTA GRANT AGREEMENT WITH ARTS ALPHARETTA, INC. FOR THE CREATION AND IMPLEMENTATION OF THE FY2024-2025 BI-YEARLY OUTDOOR SCULPTURE EXHIBIT / ART ON-LOAN PROJECT

THIS AGREEMENT is made and effective as of August 1, 2024 (the "Effective Date"), by and between the **CITY OF ALPHARETTA, GEORGIA**, a municipal corporation of the State of Georgia (the "City"), and **ARTS ALPHARETTA, INC.**, a Georgia nonprofit corporation, with its principal office located at 625 Varina Way, Alpharetta, Georgia 30022 ("Arts Alpharetta").

BACKGROUND

WHEREAS, the Charter of the City of Alpharetta authorizes the City to exercise and perform all functions necessary or desirable to promote the general welfare of the City of Alpharetta and its inhabitants; and

WHEREAS, the City Council has approved the funding of a public art initiative to create an outdoor sculpture exhibit / art on loan project, the intended purpose of which is to further goals and policies set forth in the City's Comprehensive Plan and Downtown Master Plan and other interests of the City, including: to foster community pride; to improve the visual attractiveness of public spaces; to provide for the incorporation and connectivity of small scale outdoor spaces, green spaces, open spaces and other public spaces as a system of public art attractions; to encourage public interaction with public places via the placement of works of art; to promote art attractions to residents, tourists and visitors and thereby promote and stimulate business and economic development in the City; and to provide for the opportunity and ability to appreciate art and expand cultural opportunities throughout the community (the "Grant Purpose"); and

WHEREAS, Arts Alpharetta is a Georgia non-profit corporation based in Alpharetta and is exempt from income tax under IRC §501(c)(3); and

WHEREAS, Arts Alpharetta and the City are mutually interested in and concerned with providing and making available an outdoor sculpture exhibit / art on loan program for the benefit of the citizens of the City of Alpharetta; and

WHEREAS, Arts Alpharetta originally presented a proposal to the City Council on October 23, 2017, providing for the creation and implementation of an outdoor sculpture exhibit / art on loan project, a temporary exhibition titled "Miscellany: Open Air Art Exhibit" (referred to herein as the "Initial Exhibition"), as part of the City outdoor sculpture exhibit / art on loan program, and the City subsequently awarded an arts grant to Arts Alpharetta in Fiscal Year 2018 to fund said project (the "FY 2018 Grant"); and

WHEREAS, Arts Alpharetta managed said FY 2018 Grant project and expended the FY 2018 Grant funds in a manner consistent with the FY 2018 Grant purpose, and Arts Alpharetta and the

City desire to continue to provide and make available an outdoor public art on loan project for the benefit of the citizens of the City of Alpharetta; and

WHEREAS, Arts Alpharetta submitted a proposal to the City Council on or about April 22, 2019, providing for the creation and implementation of a second project for the outdoor public art on loan project, a temporary exhibition titled "Omnium Gatherum," and the City subsequently awarded an arts grant to Arts Alpharetta in Fiscal Year 2019 to fund said project (the "FY 2019 Grant"); and

WHEREAS, Arts Alpharetta managed said FY 2019 Grant project and expended the FY 2019 Grant funds in a manner consistent with the FY 2019 Grant purpose, and Arts Alpharetta and the City desire to continue to provide and make available an outdoor public art on loan project for the benefit of the citizens of the City of Alpharetta; and

WHEREAS, Arts Alpharetta submitted a proposal to the City, which was presented to the City Council on _____, 2024, providing for the creation and implementation of a third project for the outdoor sculpture exhibit / art on loan project, a temporary exhibition titled "*RIFF*," and the City subsequently awarded an arts grant to Arts Alpharetta in FY 2024 and FY 2025 to fund said project (the "FY2024 – FY2025 Grant"); and said proposal as subsequently modified by mutual agreement of the parties is referred to herein as the "Proposal"; and

WHEREAS, the City desires to continue to fund the outdoor public sculpture on loan project described in the Proposal, a temporary exhibition titled "Riff" (the "Project"), and Arts Alpharetta is willing and able to perform the Project and is authorized to expend such funds for the purpose of performing the Project in a manner consistent with the Grant Purpose; and

WHEREAS, the City Council has approved the award of the FY2024-2025 arts grant to Arts Alpharetta for the purposes and in the amount described herein.

NOW THEREFORE, the City and Arts Alpharetta hereby agree to the following:

1. GRANT ACCEPTANCE AND SCOPE OF SERVICES

The City hereby awards a grant in the amount of NINETY THOUSAND DOLLARS ($90,000.00-funding combined from FY2024 $45,000.00 and FY2025 $45,000.00) (the "Grant Funds") to Arts Alpharetta for the purpose of managing the Project within the City of Alpharetta in a manner that is consistent with the Grant Purpose. Arts Alpharetta hereby accepts said grant under the terms and conditions of this Agreement and agrees to utilize the funds from this grant to perform and carry out in full the Project in a manner that is consistent with the Grant Purpose. The Project and the scope of services to be performed by Arts Alpharetta are further described and identified in **Exhibit "A"** attached hereto and incorporated herein by this reference.

2. DISBURSEMENT OF GRANT FUNDS

Within fourteen (14) days of execution of this Agreement by both parties, the City shall deliver to Arts Alpharetta a check in the amount of FORTY-FIVE THOUSAND DOLLARS ($45,000.00), as an initial, partial payment ("Initial Payment") of the Grant Funds, representing fifty percent (50%) of the Grant Funds. City will disburse the balance ("Final Payments") of the Grant Funds by tendering a check to Arts Alpharetta as follows:

(a) The 1st Exhibit Cycle Final Payment in the amount of THIRTY-ONE THOUSAND AND FIVE HUNDRED DOLLARS ($31,500.00), representing thirty-five percent (35%) of the Grant Funds, will be disbursed once Arts Alpharetta has spent or contractually obligated the Initial Payment in full and has delivered to the City its "Request for 1st Exhibit Cycle Final Payment." In its "Request for 1st Exhibit Cycle Final Payment," Arts Alpharetta shall certify that this Agreement is being implemented in compliance with its terms, that the Initial Payment previously paid to Arts Alpharetta under this Agreement has been spent or contractually obligated in accordance with this Agreement, and that Arts Alpharetta is prepared to spend or contractually obligate the 1st Exhibit Cycle Final Payment expeditiously in accordance with this Agreement. The certification shall be signed by an authorized representative of Arts Alpharetta and notarized.

(b) The 2nd Exhibit Cycle Final Payment in the amount of THIRTEEN THOUSAND AND FIVE HUNDRED DOLLARS ($13,500.00), representing the remaining fifteen percent (15%) of the Grant Funds, will be disbursed once Arts Alpharetta has spent or contractually obligated the 1st Exhibit Cycle Final Payment in full and has delivered to the City its "Request for 2nd Exhibit Cycle Final Payment." In its "Request for 2nd Exhibit Cycle Final Payment," Arts Alpharetta shall certify that this Agreement is being implemented in compliance with its terms, that the 1st Exhibit Cycle Final Payment previously paid to Arts Alpharetta under this Agreement has been spent or contractually obligated in accordance with this Agreement, and that Arts Alpharetta is prepared to spend or contractually obligate the 2nd Exhibit Cycle Final Payment expeditiously in accordance with this Agreement. The certification shall be signed by an authorized representative of Arts Alpharetta and notarized.

3. USE OF GRANT FUNDS

(a) Permitted Purposes. Arts Alpharetta may use the Grant Funds only for the purposes set forth in Section 1 of this Agreement, to wit: to procure and provide the services, labor, artwork/sculptures, materials, equipment, superintendence and other incidentals contemplated in this Agreement, including Exhibit "A" hereof, and as otherwise necessary to create, implement, perform and carry out the Project in a manner that is consistent with the Grant Purpose and the use of funds contemplated herein. Further, expenditures of the Grant Funds by Arts Alpharetta shall conform to the budget for the Project attached hereto and incorporated herein as **Exhibit "B"**.

(b) Capital Equipment. Arts Alpharetta shall not use the Grant Funds to purchase any kind of capital equipment.

(c) Deadlines. Except as extended by written permission of the City, the following deadlines will apply:

(1) Expenditure or Obligation. Arts Alpharetta must expend or contractually obligate the full amount of the Grant Funds in accordance with the timeframes set forth in Exhibit "A" and this Agreement. At the end of that time, the authority to expend unencumbered Grant Funds or to obligate them contractually will expire, and Arts Alpharetta must repay to the City, within fifteen (15) days, all Grant Funds paid to Arts Alpharetta that Arts Alpharetta has not spent or contractually obligated, unless the deadline is extended in writing by the City for good cause shown.

(2) Duty to Complete Expeditiously and Report. Arts Alpharetta will expeditiously implement the grant and will submit to the City, not less than once every four (4) months beginning from the date of this Agreement, detailed financial and status reports related to the Project. All uses and expenditures of Grant Funds pursuant to this Agreement shall be completed by the dates set forth in Exhibit "A", which in no event shall be any later than **June 30, 2026** (the "Date of Completion"). Not more than fifteen (15) days after the Date of Completion, Arts Alpharetta will report to the City the status of Grant Funds expended or incurred and Arts Alpharetta return to the City any unspent Grant Funds, whether contractually obligated or not, unless the City consents in writing to a new deadline for good cause.

(d) Documenting Grant Purpose. To ensure that the expenditure of funds are being made in a manner that is consistent with the Grant Purpose, Arts Alpharetta shall maintain records detailing all uses and expenditures of the Grant Funds and provide the City with copies of such records upon request by the City.

(e) Additional Responsibilities and Obligations of Arts Alpharetta.

(1) Sculpture Selection. Arts Alpharetta shall be responsible for soliciting proposals for loaned sculptures to display in the exhibition and, in consultation with the City, selecting the sculptures that will be displayed in the exhibition. The final selection of sculptures by Arts Alpharetta shall be subject to the City's right to object to any proposed sculpture. Prior to making a final decision regarding the selection of a sculpture and entering into a binding agreement for the loan or purchase of such sculpture, Arts Alpharetta shall notify the City of its proposed selection and provide the City a ten (10) day period to review the proposed selection/sculpture. If the City notifies Arts Alpharetta of its disapproval of the proposed sculpture during said ten (10) day period, Arts Alpharetta shall not select the subject sculpture for the exhibition. Arts Alpharetta acknowledges and agrees that the City's public system of outdoor public art attractions, including outdoor visual works of art placed on or within City greenway, public rights-of-way, parks or any other property owned or leased by the City or in which the City holds a property interest ("City Property"), play an important role in defining the identity that the City projects to its

residents and the outside world and that the City has a substantial interest in selecting works of art that are appropriate for the place in question, based on aesthetics, history, local culture, and similar factors. Arts Alpharetta further acknowledges and agrees that such visual works of art convey and have the effect of conveying a government message and thus constitute government speech.

(2) Site Selection. Arts Alpharetta, in consultation with the City, shall be responsible for identifying and selecting the locations (within the area identified in Exhibit "A") at which the sculptures will be installed (referred to herein as the "Sites", or individually as a "Site"). The proposed Sites selected by Arts Alpharetta shall be subject to the City's final written approval, which may be withheld at its sole discretion.

(3) Presentation of Selected Sculptures. Arts Alpharetta shall present the proposed collection of sculptures curated and proposed for the current lease to Alpharetta Cultural Arts Commission for discussion and final approval at their regularly scheduled meeting dates within the timeline for installation.

(4) Signage. Arts Alpharetta shall procure and install signage for the Project, subject to the City's approval of the proposed sign. No sign shall be installed without the City's prior written approval of same.

(5) Required Terms of Agreements with Artists. Arts Alpharetta shall incorporate the provisions attached hereto and incorporated herein as **Exhibit "C"** (as modified to conform to the subject agreement) and include such other terms and conditions as required by the City Attorney in any agreement with an artist providing for the loan of a sculpture that will be installed on City Property as part of the Project.

(6) Compliance with Laws. Arts Alpharetta shall comply with all applicable federal, State, and City laws, statutes, ordinances, rules, regulations, and requirements in the performance of its obligations hereunder and any services related to the Project, including, but not limited to, all applicable copyright laws and other intellectual property laws.

4. TERM

This Agreement shall commence upon the Effective Date and continue for a 2-year term ending on **June 30, 2026** as further set forth herein and in accordance with O.C.G.A. § 36-60-13, unless terminated earlier in accordance with other provisions of this Agreement or extended by mutual agreement of the parties. The Agreement term shall end absolutely and without further obligation of the City at the close of the Fiscal Year, June 30th, and shall automatically renew at the beginning of the next Fiscal Year, July 1st. Arts Alpharetta shall complete the Project in accordance with the schedule set forth in Exhibit "A" or as otherwise mutually agreed to by the parties in writing. As applicable, title to any supplies, materials, equipment, or other personal property shall remain in Arts Alpharetta until fully paid for by the City.

5. ACCOUNTING; AUDIT RIGHTS

(a) Accounting. Arts Alpharetta will account for the Grant Funds and keep track of their

application in such a way that their receipt, deposit, budgeting, contractual commitment, expenditure, and uses may be determined and confirmed chronologically by auditors at all times. Arts Alpharetta shall also account for the Grant Funds in accordance with generally accepted accounting principles for nonprofit corporations and shall provide the City with any information and documents necessary to detail and support the accounting of such funds, including the actual expenditures, as determined by the City.

(b) Audit. The City shall retain authority to obtain and/or perform an audit of Arts Alpharetta in any manner related to this Grant. Further, Arts Alpharetta shall allow, obtain, and cooperate with any audit or investigation of Grant administration requested or undertaken by the City. Arts Alpharetta shall also provide to the City statements of expenditures and financial statements reasonably required by the City with respect to this Agreement and the Grant Funds.

(c) Records Retention. Arts Alpharetta will maintain all records required under this Agreement for at least three years after it has fully spent or returned to the City the amount of all Grant Funds.

(d) Written Contracts. Any external expenditure or obligation of Grant Funds by Arts Alpharetta must be under a contract and in writing.

(e) Certification. Arts Alpharetta must certify to the City that the Grant Funds were used solely for the purposes for which the grant was made. The certification must also include a final statement that expenditures made from the Grant Funds were in accordance with Exhibits "A" and "B" and the Grant Purpose. Arts Alpharetta must make the certification required above for each fiscal year in which Arts Alpharetta expends Grant Funds or after which Arts Alpharetta has an unexpended balance of Grant Funds.

(f) Survival. The obligations set forth in this Section and its subsections shall survive termination of this Agreement.

6. INSURANCE

(a) Insurance Generally. Unless (and then only to the extent) expressly waived in accordance with Subsection 6(f) below, Arts Alpharetta shall obtain and continuously maintain during the term of this Agreement insurance of the kind and in the minimum amounts specified as follows:

(1) Statutory Worker's Compensation and Employers Liability Insurance in the minimum amount of Five Hundred Thousand Dollars ($500,000) or as required by applicable law, whichever is greater, for all employees and other persons as may be required by Georgia law. If Arts Alpharetta is self-insured, Arts Alpharetta shall additionally provide the City with a certificate from the Georgia Board of Workers' Compensation stating that Arts Alpharetta qualifies to pay its own workers' compensation claims.

(2) *Comprehensive General Liability Insurance* with minimum combined single limits of One Million Dollars ($1,000,000) per occurrence and in the aggregate. The policy shall be applicable to all premises and all operations of Arts Alpharetta. The policy shall include coverage for bodily injury, broad form property damage, personal injury (including coverage for contractual and employee acts), blanket contractual, independent contractors, products, and completed operations. Completed operations coverage shall be maintained for a minimum period of two (2) years following completion of the Project. The policy shall contain a severability of interests provision. Coverage shall be provided on an "occurrence" basis as opposed to a "claims made" basis. Such insurance shall be endorsed to name the City, and its elected officials, officers, employees and agents, as additional insured parties.

(3) *Comprehensive Automobile Liability Insurance* with minimum combined single limits for bodily injury of not less than One Million Dollars ($1,000,000) per occurrence and property damage of not less than One Hundred Thousand Dollars ($100,000) per occurrence with respect to each of Arts Alpharetta's owned, hired, and non-owned vehicles assigned to or used in performance of this Agreement. The policy shall contain a severability of interests provision. Such coverage must include all automotive equipment used in the performance of this Agreement, both on and off any work site, and such coverage shall include non-ownership and hired cars (vehicles and equipment) coverage. Such insurance coverage must either extend to all of Arts Alpharetta's contractors or subcontractors performing services under this Agreement (if any) or Arts Alpharetta shall require such contractors or subcontractors to procure and maintain insurance covering each subcontractor and meeting the above criteria. Such insurance shall be endorsed to name the City, and its elected officials, officers, employees and agents, as additional insured parties.

(4) *Umbrella/Excess Liability Insurance* with minimum combined single limits of One Million Dollars ($1,000,000) per occurrence and in the aggregate in excess of the underlying primary Commercial General Liability insurance policy described above. Such policy shall be no more restrictive and provide the same or greater coverage as the underlying Comprehensive General Liability insurance policy. Such insurance shall be endorsed to name the City, and its elected officials, officers, employees, and agents as additional insured parties.

(b) Requirements of Insurance.

(1) Insurance shall be procured and maintained with insurers with an A- or better rating as determined by Best's Key Rating Guide. All insurance shall be continuously maintained to cover all liability, claims, demands, and other obligations assumed by Arts Alpharetta.

(2) No policy of insurance shall contain any exclusion for bodily injury or property damage arising from completed operations.

(3) Every policy of insurance shall provide that the City will receive notice no less than thirty (30) calendar days prior to any cancellation, termination, or a material change in such policy.

(4) Proof of required insurance shall be maintained in all equipment and motor vehicles insured in accordance with the provisions of this Agreement.

(5) Arts Alpharetta will ensure that any and all policies of insurance procured hereunder shall provide for a waiver of subrogation against the City, and Arts Alpharetta waives any claim against the City arising in contract or tort which is covered by its insurance hereunder.

(c) Failure to Obtain or Maintain Insurance. Neither Arts Alpharetta's failure to obtain and continuously maintain policies of insurance in accordance with this Section and its subsections nor the City's waiver of such requirements in accordance with Subsection 6(f) below shall limit, prevent, preclude, excuse, or modify any liability, claims, demands, or other obligations of Arts Alpharetta arising from performance or non-performance of this Agreement. Failure on the part of Arts Alpharetta to obtain and to continuously maintain policies providing the required coverage, conditions, restrictions, notices, and minimum limits shall constitute a material breach of this Agreement upon which the City may immediately terminate this Agreement without advance notice.

(d) Insurance Certificates. Arts Alpharetta shall provide proof of such insurance to the City contemporaneously with the execution of this Agreement. Prior to the disbursement of Grant Funds, Arts Alpharetta shall submit to the City certificates of insurance for all required insurance. Insurance limits, term of insurance, insured parties, and other information sufficient to demonstrate conformance with this Section and its subsections shall be indicated on each certificate of insurance. Acceptance of a certificate or proof of insurance does not constitute approval or agreement by the City that the insurance requirements have been satisfied.

(e) Other Insurance. Arts Alpharetta shall maintain such other types and/or amounts of insurance as reasonably required by the City from time to time.

(f) City's Waiver of Insurance Requirements. The parties do hereby expressly agree that the City, acting at its sole option and through its Risk Manager, may waive any and all requirements contained in this Section and its subsections, such waiver to be made in writing, as an Addendum to this Agreement, signed by the City Risk Manager. Such waiver may include or be limited to a reduction in the amount of coverage required above. The extent of waiver shall be determined solely by the City's Risk Manager taking into account the nature of the work and other factors relevant to the City's exposure, if any, under this Agreement. Any such waiver may be withdrawn, terminated, or modified by the Risk Manager, in whole or in part, so as to reinstate such obligation(s), effective upon the Risk

Manager's execution of a further Addendum to this Agreement and the provision of written notice of same to Arts Alpharetta. The foregoing provision shall supersede and control over any conflicting provision(s) of this Agreement.

(g) Contractor Insurance. Arts Alpharetta shall, in any contract for the installation or removal of sculptures or the performance of construction or other similar services on City Property in connection with the Project, require its contractor (of any tier) to carry statutory Workers' Compensation Insurance, Employers Liability Insurance, Comprehensive General Liability Insurance and Comprehensive Automobile Liability Insurance in the same minimum amounts and providing the same or greater coverage as listed above for Arts Alpharetta. Arts Alpharetta shall further require such contractor to have its Comprehensive General Liability Insurance and Comprehensive Automobile Liability Insurance policies endorsed to name Arts Alpharetta, the City and the City's elected officials, officers, employees, and agents as additional insureds. Arts Alpharetta shall require its contractor to furnish to the City certificates of insurance for all required insurance prior to contractor commencing any work under such contract. No waiver by the City's Risk Manager pursuant to Subsection 6(f) of this Agreement shall operate or be construed as a waiver of the requirements set forth in this Paragraph (g).

7. PROPERTY INSURANCE

(a) Unless the artist expressly elects to maintain its/his/her own insurance, the City will insure the sculpture against physical loss or damage during the period of time the sculpture is on loan to Arts Alpharetta and located on City Property (not to exceed 2 years) (duration of the exhibit is two years) for 100% of the declared fair market value listed by the artist in its/his/her agreement with Arts Alpharetta, not to exceed fifty thousand dollars ($50,000.00). Such coverage shall not apply during transit. The insurance will include coverage against risk of physical loss or damage from external causes while located on City Property during the term of the loan, which shall not include any loss or damage incurred during transit, subject to any policy exclusions; however, if the sculpture is industrially fabricated or can otherwise be repaired or replaced to the artist's specifications, the amount of insurance shall be limited to the cost of such repair or replacement. In the event of a loss, it will be the artist's responsibility to establish to the satisfaction of the City's insurer that the declared value is the actual fair market value of the sculpture. If no declared value is specified in artist's agreement with Arts Alpharetta, the City will insure the sculpture at an estimated value as determined in the City's sole discretion; however, such estimated value shall not be construed as an appraisal of the sculpture. The risk of loss or damage to the sculpture shall be borne solely by the artist during transit and until such time the sculpture is delivered to City Property and care, custody and control of the sculpture is accepted by Arts Alpharetta. Once the sculpture has been removed from public display in the exhibition in accordance with artist's agreement with Arts Alpharetta, the risk of loss or damage to the sculpture shall be borne solely by artist. The amount payable by insurance secured in accordance with the foregoing provisions is agreed to be the sole and exclusive remedy available to artist for any physical loss or damage to the sculpture, and in no event will the City be liable to Arts

Alpharetta or any artist for damages in excess of the amount of any insurance recovery from the City's insurance policy, nor for any loss or damage due to causes excluded from coverage under such policy. Nothing in this Section shall be deemed to constitute a waiver of the City's sovereign immunity.

8. INDEMNIFICATION

(a) Arts Alpharetta shall indemnify and hold harmless the City, including its officials, officers, employees and agents, from and against any and all claims, demands, losses, liabilities, suits, actions, costs, expenses (including expenses of litigation and attorneys' fees) and damages (collectively "Claims") of any type or nature arising out of or related to Arts Alpharetta's or its officers', agents', employees', contractors' or subcontractors' performance or non-performance of this Agreement, including, but not limited to, (a) any Claim arising out of or related to Arts Alpharetta's (or its officers', agents', employees', contractors' or subcontractors') failure to comply with any of the obligations contained herein, (b) any Claim for personal injury or property damage arising out of or related to any act or omission of Arts Alpharetta and/or Arts Alpharetta's agents, employees, contractors or subcontractors, (c) any Claim for infringement of patent, copyright, trademark, trade secret or other intellectual property or proprietary right, or (d) any Claim for infringement of an artist's rights under 16 U.S.C. § 106A, 16 U.S.C. § 113, or similar state, federal, or international law. Notwithstanding the foregoing, this indemnification obligation shall not apply to any Claim for physical loss or damage to the sculpture that is covered by the insurance policy maintained by the City in accordance with Section 7 of this Agreement or to any Claim caused by the sole negligence or willful misconduct of the City. Nothing set forth in this Section shall be deemed to constitute a waiver of the City's sovereign immunity. Further, no provision of this Agreement shall be deemed to create rights in any third party or create any third- party beneficiaries (other than with respect to the provisions set forth in Section 7 hereof obligating the City to maintain property insurance insuring against risk of physical loss or damage to the sculpture for the benefit of the artist/owner of same).

9. TERMINATION; REMEDIES UPON DEFAULT

(a) Termination. This Agreement may be terminated by the City in the event Arts Alpharetta defaults in the observance or performance of any of its covenants or obligations under this Agreement. Prior to such termination, the City shall provide written notice of the default to Arts Alpharetta, and Arts Alpharetta shall have ten (10) days from the date of receipt of such notice to cure the default if such default is capable of being cured. If Arts Alpharetta fails to cure the default within said ten (10) day period, or if the default is not capable of being cured, the City may terminate this Agreement effective immediately upon the provision of written notice to Arts Alpharetta. The City may also terminate this Agreement for convenience at any time upon providing a written notice thereof at least thirty (30) days in advance of the termination date.

(b) Repayment of Grant Funds.

(1) Unexpended Grant Funds. Upon termination of this Agreement pursuant to this Section, all remaining and unexpended Grant Funds, whether contractually obligated or not, shall be immediately due and payable to the City by Arts Alpharetta without further demand or notice.

(2) Non-Compliance with Audit Requirements. If Arts Alpharetta defaults on its obligation to comply with the certification and audit requirements set forth in Section 5 of this Agreement and fails to cure such default within ten (10) days of receipt of notice of same from the City, Arts Alpharetta shall be liable to the City for the repayment of all Grant Funds previously disbursed by the City under this Agreement. Upon such default and failure to cure, all Grant Funds disbursed to Arts Alpharetta under this Agreement, whether spent, unspent, or contractually obligated, shall be immediately due and payable to the City by Arts Alpharetta without further demand or notice.

(3) Non-Permitted Use. Arts Alpharetta shall promptly repay the City the amount of any Grant Funds spent or contractually committed for purposes outside of the purposes set forth in Section 1 of this Agreement or otherwise spent or committed in violation of this Agreement, as determined in writing by the City, but in no event any later than ten (10) days following receipt of notice from the City of any such non-permitted expenditure or contractual commitment.

(4) Survival. The obligations set forth in this Section and its subsections shall survive termination of this Agreement. No termination of this Agreement shall relieve or discharge Arts Alpharetta from its liability for repayment of any portion of the Grant Funds required hereunder, and Arts Alpharetta's obligations with respect to repayment of the Grant Funds (or portion thereof) shall continue until all amounts due and owing to the City have been paid in full.

(c) Ineligibility for other Grants. Arts Alpharetta will not be eligible to receive any future grant from the City until the amount of Grant Funds required to be repaid to the City under this Agreement has been paid in full. Additionally, and notwithstanding the foregoing, Arts Alpharetta acknowledges and agrees that the City's early termination of this Agreement due to an event of default may, in the City's discretion, constitute sufficient grounds for denying or rejecting any subsequent proposal or application for a grant from the City.

(d) Interest. Any Grant Funds required to be repaid to the City by Arts Alpharetta must be repaid with interest at the average rate at which the Grant Funds would have earned interest if held by the City, as reasonably determined by the City's Finance Director, which shall accrue from the date of the City's disbursement of the Grant Funds to Arts Alpharetta; provided, however, any amounts which have not been paid by the due dates provided for herein shall accrue interest at an annual rate equal to the bank prime loan rate (as posted by the Board of Governors of the Federal Reserve System in statistical release H. 15) plus three percent (3%) from the date the payment was due until the date the payment is made.

(e) Remedies Cumulative. The foregoing remedies are cumulative of one another and of all other remedies at law or in equity which the City may have.

10. MISCELLANEOUS

(a) Compliance with Law – No Discrimination. In the performance of this Agreement, Arts Alpharetta shall fully comply with all applicable federal, state, or local laws, rules, and regulations, including, but not limited to, the Civil Rights Act of 1964 (as amended), the Age Discrimination Act of 1975 (as amended), the Americans with Disabilities Act of 1990 (as amended), Section 504 of the Rehabilitation Act of 1973 (as amended), and any other applicable law which prohibits discrimination on the ground of race, color, religion, sex, age, national origin, age or disability. In the performance of this Agreement, Arts Alpharetta shall not discriminate against any person on the basis of race, color, religion, sex, national origin or ancestry, age or disability and shall further ensure that its agents, contractors, and/or subcontractors comply with same.

(b) Compliance with Illegal Immigration Reform and Enforcement Act. Arts Alpharetta, if providing the "physical performance of services" (as defined in O.C.G.A. § 13-10-90) under this Agreement, shall comply with the requirements of O.C.G.A. § 13-10-91.

(c) Relationship of Parties. Arts Alpharetta shall at all times be acting as an independent contractor of the City and shall not be deemed by virtue of this Agreement to have entered into any agency or employer/employee relationship, partnership, joint venture, or other relationship with the City other than as a contracting party and independent contractor. The City is not an agent or representative of Arts Alpharetta, and Arts Alpharetta is not an agent or representative of the City. Arts Alpharetta shall have no authority to contract for or bind the City in any manner. Arts Alpharetta shall be solely responsible for its services performed with respect to this Agreement.

(d) Notices. Any notice required or permitted under this Agreement shall be deemed to have been sufficiently given if hand delivered or sent by certified mail or statutory overnight delivery, return receipt requested, to the other party at the address set forth below:

If to Arts Alpharetta, at the following address:

Arts Alpharetta, Inc.
625 Varina Way
Alpharetta, GA 30022
Attn: Nancy J Murphy

If to the City, at the following address:

City of Alpharetta
Department of Recreation, Parks & Cultural Services
2 Park Plaza
Alpharetta, GA 30009
Attn: Morgan Rodgers

With a copy to:

Jarrard & Davis, LLP
222 Webb Street
Cumming, GA 30040

For the purposes of this Agreement, notice sent by certified mail or statutory overnight delivery shall be deemed given on the next business day following the day same was placed in the United States mail or with U.S.P.S. or a commercial delivery firm for overnight delivery. Notice may also be given to such other address/representative of a party as has been previously furnished, in writing, by such party for the receipt or giving of notice, with specific reference to this Agreement.

(e) Time is of the Essence. All limitations of time set forth in this Agreement are of the essence.

(f) No Waiver. The City's failure or forbearance to enforce any term hereof shall not be deemed to be a waiver of such right or claim or any similar right or claim hereunder. Moreover, the City's waiver of any term hereof shall not operate or be construed as a waiver of any subsequent breaches of the same or any other term.

(g) Counterparts. This Agreement may be executed in one or more counterparts, each of which shall be deemed an original, but all of which shall together constitute one (1) and the same instrument. This Agreement may be executed by electronic signature, and such signature shall have the same validity and effect as a signature affixed by hand and shall constitute an original for all purposes.

(h) Captions. The captions in this Agreement are for convenience and not for use in interpretation.

(i) Severability. In the event that any provision hereof is held to be invalid or unenforceable, such provision shall be severed from this Agreement and shall not affect the validity or enforceability of the remainder of this Agreement.

(j) Entire Agreement; Amendment. This Agreement constitutes the entire agreement between the City and Arts Alpharetta with respect to the matters contained herein, superseding all prior discussions, understandings, or agreements between the parties. No term or provision of this Agreement may be amended, waived, supplemented, modified, or terminated except by an

instrument in writing signed by the party against whom the enforcement of the amendment, waiver, supplement, modification, or termination is sought.

(k) Assignment. This Agreement may not be assigned by Arts Alpharetta without the prior written consent of the City.

(l) Governing Law and Venue. This Agreement is executed and shall be performed in the State of Georgia and shall be construed and enforced in accordance with the laws of the State of Georgia. Venue for any action arising out of this Agreement shall lie in the appropriate court of Fulton County, Georgia. This Agreement shall be governed in all respects, as to validity, construction, and capacity performance or otherwise, by the laws of the State of Georgia.

(m) No Waiver of Governmental Immunity. Nothing in this Agreement shall be construed to waive, limit, or otherwise modify any governmental or sovereign immunity that may be available by law to the City, its elected officials, officers, employees, contractors, or agents, or any other person acting on behalf of the City and, in particular, governmental, or sovereign immunity afforded or available pursuant to Georgia law.

(n) Publicity Provision. Arts Alpharetta shall not use any trademarks, service marks, or logos of the City without the City's express prior written consent. Arts Alpharetta agrees to give credit to the City in any advertising or other promotional modality regarding the exhibition, such credit to be given a manner approved by the City. Unless otherwise requested by the City, Arts Alpharetta further agrees to include the following statement (subject to any reasonable modifications requested or approved by the City) in all brochures, news releases, programs, publications, and other printed materials regarding the exhibition: "This project is funded by an arts grant from the City of Alpharetta, Georgia."

(o) Renewal; Annual Appropriation. Notwithstanding any other provision of this Agreement, pursuant to O.C.G.A. § 36-60-13, this Agreement shall be effective for a term commencing on the Effective Date and terminating at midnight on June 30, 2024 (the "initial term"), without further obligation on the part of either party other than outstanding obligations incurred prior to the expiration of such term. Thereafter, in accordance with O.C.G.A. § 36-60-13 and subject to the further conditions provided in this Paragraph, this Agreement shall be automatically renewed for up to two (2) successive one (1) year terms (each one-year term occurring after the initial term shall be referred to as a "renewal term") unless the City delivers written notice of non-renewal to Arts Alpharetta at least thirty (30) days prior to the expiration of the initial term. At the expiration of each renewal term (other than the third renewal term), this Contract shall be automatically renewed for an additional one (1) year term, unless the City furnishes Contractor written notice of its intent not to renew this Contract not less than thirty (30) days prior to the expiration of such renewal term. If written notice of non-renewal is given, this Contract will terminate upon expiration of the then existing term. Notwithstanding any other provision of this Agreement, pursuant to O.C.G.A. § 36-60-13, this Agreement will terminate immediately and absolutely if the City determines that adequate funds are not appropriated or granted or funds are de-appropriated

or no longer available such that the City cannot fulfill its obligations under this Agreement, which determination is at the City's sole discretion and shall be conclusive.

(p) Additional Terms of Arts Alpharetta. The City shall not be bound by any terms and conditions included in any invoice, catalog, brochure, data sheet, or other document provided by Arts Alpharetta which attempts to impose any condition in variance with or in addition to the terms and conditions contained herein.

(q) Presumptions and Interpretations. The parties further agree that should any provision of this Agreement require interpretation or construction, the court, administrative body or other entity interpreting or construing this Agreement shall not apply a presumption that the provisions hereof shall be more strictly construed against one party by reason of the rule of construction that a document is to be construed more strictly against the party who itself or through its agents prepared same, it being agreed that all parties and/or their respective attorneys and agents have been fully afforded the opportunity to review all provisions of this Agreement.

(r) Conflict of Interest. Arts Alpharetta warrants that it has not employed or retained any company or person, other than a bona fide employee working solely for Arts Alpharetta, to solicit or secure this Agreement, and that it has not paid or agreed to pay any person, company, contractor, individual or firm, other than a bona fide employee working solely for Arts Alpharetta, any fee, commission, percentage, gift, or other consideration contingent upon or resulting from the award or making of this Agreement; provided however, this provision does not encompass Arts Alpharetta's ability to have hired or engaged consultants to assist in preparation of the proposal and delivery of the services hereunder. For the breach or violation of this provision, the City shall have the right to terminate the Agreement without liability at its discretion and recover the full amount of such fee, commission, percentage, gift, or consideration. Further, neither Arts Alpharetta nor any of its directors, officers, employees, agents, or representatives shall obtain any kickbacks or benefits for itself, themselves, or other clients as a result of this Agreement.

(s) Survival. Any and all provisions of this Agreement creating obligations or requiring acts that extend beyond the term of this Agreement, including, without limitation, the indemnification provisions contained herein, shall survive the expiration or termination of this Agreement, regardless of the reason for such termination.

Remainder of page intentionally left blank.

(Signature page to follow.)

2 PARK PLAZA
ALPHARETTA, GA 30009

IN WITNESS WHEREOF, the City and Arts Alpharetta have each caused this Agreement to be executed and delivered by a duly authorized officer, agent, or official as of the date first written above.

CITY OF ALPHARETTA, GEORGIA

By: _____
Jim Gilvin, Mayor

APPROVED AS TO CONTENT:

By: _____
Chris Lagerbloom, City Administrator

APPROVED AS TO FORM:

By: _____
City Attorney

ARTS ALPHARETTA, INC.

By: _____
Nancy Murphy, President

ATTEST:

By: _____
Erika Kenn, Corporate Secretary

EXHIBIT "A"

Description of Project – "RIFF: Open-Air Art Exhibit"

RIFF, meaning a repeated phrase in music, free-styling, and an individual artistic expression often described as freelance, whimsical, unique emotion. *RIFF* is an acronym for Representing Inspiration in Free Form and presents a tone of independence yet within the theme - more complimentary than rebellious, more expanding of the vision than limiting, with freedom of expression from the artist's interpretation. It is a jazzy experiment or idea, making changes that create a new and novel version of it.

This fourth phase of the Outdoor On-Loan Exhibit or Open Air Art Exhibit, formerly known as *Miscellany* (first phase), *Omnium Gatherum* (second phase), and *Medley* (third phase), will provide temporary outdoor sculptures to be placed in pre-selected sites in Brooke Street Park (City Hall Grounds), along the Thompson Street development, Goswick Park, and Wills Park.

Scope of Services

The following is a description of the services to be performed by Arts Alpharetta to carry out and complete the Project:

- Arts Alpharetta will recruit artist entries and create an appropriate application process for artists to submit entries;
- Arts Alpharetta will conduct and oversee the selection process for the artwork (sculptures);
- Arts Alpharetta will procure the loans of sculptures from artists, who will each be paid an honorarium for the loan of the sculpture at one of the two payment cycles, as follows: (i) the loan of sculptures provided under the 1st Payment Cycle at installation and the amount of the honorarium will be $3,000; and (ii) the loan of sculptures provided under the 2nd Payment Cycle at the end of the 2-year loan at de-installation and the amount of the honorarium will be $3,000.00.
- If not otherwise pre-selected, Arts Alpharetta will identify and select sites for placement of the sculptures in coordination with the City;
- Arts Alpharetta will provide for the installation and removal (de-installation) of the sculptures, including the construction or installation of concrete pads or other bases on which to place the
- sculptures, by a licensed contractor, and coordinate such installations and removals with the City and artists; and
- Arts Alpharetta will actively co-promote the event to the public.
- Arts Alpharetta will retain the services of
- Arts Alpharetta will be responsible for all costs and expenses associated with the foregoing services, including all fees for the loans of the sculptures and all costs and expenses for the installation/removal of the sculptures.

2024 – 2026 Exhibition Dates and Timeline

The exhibit will run in **one, two-year cycle:**

Beginning July 2024; installation (by appointment) starting in August 2024 and will run through June 2026; de-installation by appointment will begin June 2026.

Tentative Calendar

Exhibit Cycle

June 3, 2024	RFP issued.
June 30, 2024	Final deadline to receive RFP submissions.
July 1-9, 2024	Jury period.
July 31, 2024	Artists notified via email after Cultural Arts Commission review.
August 1-19, 2024	Delivery/Installation dates (by appointment with Arts Alpharetta exhibition coordinator).
August 2024 – June 2026	Exhibition dates.
June 2026	De-Installation dates (by week-day appointment with Arts Alpharetta exhibition coordinator).

EXHIBIT "B"

FY2024 – FY2025 Public Art - Contract Outdoor Sculpture Exhibit – *RIFF*

Ordinary Income/Expense		
Income		
43400 - Direct Public Support		
43403 - City Grant: Outdoor Art on Loan		$90,000
Total Income		**$90,000**
Expense		
60930 - Dues and Subscriptions	**see below	$0
62100 - Contract Services		
62115 - Payments to Artists		$61,000
62120 Call to Artists (CaFE)		$500
62150 Outside Contractors (jurors)		$500
Sub-total		**$62,000**
62800 - Facilities and Equipment		
62850 - Installation Services		$13,000
62860 - De-installation services		$9,000
Sub-total		$22,000
6500 - Operations		
65060 - Office expenses	**see below	$0
65100 - Other types of expenses		
65105 - Marketing & Promotional (MailChimp and signage)		$4,500
65110 - Center Promotional Events		
65115 - Promotional Events (music)	**see below	$0
65110 - Center Promo Events - other	**see below	$0
65120 - Insurance - Liability D and O		$1,500
Sub-total		**$6,000**
Reserve		
Additional Sculptures, Rental/Purchase, Unanticipated		
TOTAL		**$90,000**

EXHIBIT "C"

The following terms and conditions shall be included in any agreement between Arts Alpharetta and an artist providing for the loan of a sculpture that will be installed on City Property as part of the Project:

A. Representations and Warranties. Artist represents and warrants that:

(1) Artist is the sole author and owner of the sculpture and the sole owner of any and all copyrights and other intellectual rights pertaining to the sculpture;

(2) The sculpture is free and clear of any lien, encumbrance, security interest or other claim, of whatever nature, including, but not limited to, any claim or dispute related to the intellectual property rights in the sculpture or parts thereof;

(3) The sculpture will not pose a danger to public property, health, or safety in view of the possibility of misuse, if such misuse was reasonably foreseeable;

(4) Foreseeable exposure to the elements and general wear and tear will not cause the sculpture to experience more than nominal damage or to fall below an acceptable standard of public display or safety;

(5) Minor maintenance of this sculpture will maintain the sculpture within an acceptable standard of public display during the term of the loan;

(6) The installation and removal of the sculpture will not unacceptably damage or alter the sculpture;

(7) Artist shall comply with all applicable statutes, rules, regulations and requirements of any governmental agency or authority, whether now or hereafter enacted, in performing its obligations hereunder, and the products and services shall comply with all such statutes, rules, regulations and requirements in effect at the time of delivery of the sculpture;

(8) Artist has not sold, assigned, transferred, licensed, granted, encumbered, or utilized the sculpture or any element thereof or any copyright related thereto which may affect or impair the rights granted to City;

(9) The sculpture will be free from defective or inferior materials and workmanship, including any defects consisting of inherent vice, or qualities that cause or accelerate deterioration of the sculpture; and

(10) The sculpture and the materials used in same are not currently known to pose a danger or be harmful to public health and safety.

Artist acknowledges that the foregoing representations and warranties will be relied upon by the City and are being made and given in connection with and for purpose of the City approving the placement of the sculpture on or within City greenway, public rights-of-way, parks, or any other property owned or leased by the City or in which the City holds a property interest ("City Property").

B. Removal of Sculpture. Artist acknowledges and agrees that the City is not responsible for the maintenance or repair of the sculpture during the term of the loan. Artist expressly authorizes the City and Arts Alpharetta, and their respective agents, contractors, or subcontractors, to install the sculpture following its delivery to City Property and to remove the sculpture within a reasonable time following the completion of the exhibition, acknowledging that only routine precautions will be taken to minimize alteration of the sculpture during installation and removal. If efforts to return the sculpture to Arts Alpharetta or the artist within a reasonable period following the completion of the exhibition are unsuccessful, then the sculpture will be removed, stored, and maintained by the City at the artist's or owner's expense for a maximum of two (2) years. If the sculpture has not been claimed by the artist within one (1) year, then in consideration of the City's storage of the sculpture, the artist or owner shall be deemed to have made the sculpture an unrestricted gift to the City. Notwithstanding any other provision to the contrary, artist acknowledges that the City has sole discretion as to whether, how long, and where a sculpture will be exhibited on City Property. Nothing shall preclude any right of the City to: (a) move the sculpture to a different site; (b) temporarily store the sculpture; or (c) remove the sculpture from public display prior to the termination of the exhibition. Without limiting the City's rights provided hereunder, should disaster, accident, emergency, or any other condition render the continued presence of the sculpture or structure to which it is affixed a hazard, the City shall have the right to remove the sculpture as to alleviate the hazardous situation without making prior notification to the artist or obtaining the artist's consent.

(1) VARA Waiver. With respect to the sculpture, artist waives any and all claims, arising at any time and under any circumstances, against the City, its officers, agents, employees, successors and assigns under the federal Visual Artists Rights Act (17 U.S.C. §§106A and 113(d)) and any other local, state, federal or international laws that convey rights of the same nature as those conveyed under 17 U.S.C. §106A or any other type of moral right protecting the integrity of works of art, including any claim arising out of or related to the alteration of the sculpture. Notwithstanding the foregoing, if the City alters the sculpture or work of art without the artist's prior consent in a manner that is prejudicial to the artist's reputation, the artist retains the right to disclaim authorship of the work of art in accordance with 17 U.S.C. §106A(a)(2). Artist acknowledges and agrees that the City has no obligation to pursue claims against third parties to remedy or prevent any alteration of the sculpture. As used herein, to "alter" means, with respect to the sculpture, to repair, modify, remove, relocate, allow to deteriorate, dispose of, distort, mutilate, deface, or destroy, and "alteration" means the alteration, repair, modification, removal, relocation, deterioration, disposal, distortion, mutilation, defacement, or destruction of the sculpture.

C. City's Intellectual Property License. Artist hereby grants to the City, including the City's agents, authorized contractors, and assigns, and to Arts Alpharetta an unlimited, non- exclusive and irrevocable license to do the following with respect to the sculpture:

(1) Use and Display. The City may use and display the sculpture for the term of the loan.

(2) Reproduction and Distribution. The City may make and distribute, and authorize the making, display, and distribution of, photographs and other two-dimensional reproductions of the sculpture in connection with any City-related purpose, including advertising and promotion, such as on or in educational and promotional materials, brochures, books, flyers, postcards,

print, broadcast, film, electronic and multimedia publicity, and catalogues or similar publications. Such reproductions of the sculpture created by the City shall contain a credit to the artist.

(3) *Third Party Infringement*. The City is not responsible for any third-party infringement of any copyright to the sculpture held by the artist, nor is the City responsible for protecting the intellectual property rights of the artist.

(4) *Filming of Sculpture*. The artist understands and acknowledges that the City, pursuant to applicable local laws, regulations, and policies, often issues film permits to persons and entities wishing to film in the City of Alpharetta, whether still, motion picture, or otherwise. Notwithstanding any other provision to the contrary, the artist recognizes and permits the City to issue such permits to persons and entities, to include the sculpture and surrounding site, and the artist holds the City harmless, therefore. The artist will not hold or seek to hold the City liable in any way for the acts of any person or entity utilizing such a film permit, or for their filming or use of the sculpture.

D. Property Insurance. Unless the artist expressly elects to maintain its/his/her own insurance, the City will insure the sculpture against physical loss or damage during the period of time the sculpture is on loan to Arts Alpharetta and located on City Property (not to exceed 2 years from installation date) for 100% of the declared fair market value listed by the artist in its/his/her agreement with Arts Alpharetta, not to exceed fifty thousand dollars ($50,000.00). The insurance will include coverage against risk of physical loss or damage from external causes while located on City Property during the term of the loan, subject to any policy exclusions; however, if the sculpture is industrially fabricated or can otherwise be repaired or replaced to the artist's specifications, the amount of insurance shall be limited to the cost of such repair or replacement. In the event of a loss, it will be the artist's responsibility to establish to the satisfaction of the City's insurer that the declared value is the actual fair market value of the sculpture. If no declared value is specified in artist's agreement with Arts Alpharetta, the City will insure the sculpture at an estimated value as determined in the City's sole discretion; however, such estimated value shall not be construed as an appraisal of the sculpture. The risk of loss or damage to the sculpture shall be borne solely by the artist during transit and until such time the sculpture is delivered to City Property and care, custody and control of the sculpture is accepted by Arts Alpharetta. Once the sculpture has been removed from public display in the exhibition in accordance with artist's agreement with Arts Alpharetta, the risk of loss or damage to the sculpture shall be borne solely by artist. In the event of any physical loss or damage to the sculpture or any alteration of the sculpture by the City without the artist's consent, the artist's sole and exclusive remedies shall be limited to the amount payable by insurance secured by the City in accordance with the foregoing provisions and the exercise of artist's right to disclaim authorship of the sculpture in accordance with 17 U.S.C. §106A(a)(2), and in no event will the City be liable to artist for any damages in excess of the amount of any insurance recovery from the City's insurance policy or for any loss or damage due to causes excluded from coverage under such policy. Artist further agrees that in no event will the City be liable to artist for any special, incidental, punitive, indirect, or consequential damages, including, without limitation, loss of profits or lost business. The foregoing limitation of liability shall apply regardless of the

cause of action under which such damages are sought.

Indemnification. Artist shall indemnify and hold harmless the City, including its officials, officers, employees and agents, from and against any and all claims, demands, losses, liabilities, suits, actions, costs, expenses (including expenses of litigation and attorneys' fees) and damages (collectively "Claims") of any type or nature arising out of or related to the artist's or its officers', agents', employees' or subcontractors' performance or non- performance of the services required hereunder or failure to comply with any of the obligations contained herein, including, but not limited to, (a) any Claim for personal injury or property damage caused, directly or indirectly, by any act or omission of artist and/or artist's agents, employees, or subcontractors, (b) any Claim for infringement of patent, copyright, trademark, trade secret or other proprietary right, or (c) any Claim for infringement of artist's rights under 16 U.S.C. § 106A, 16 U.S.C. § 113, or similar state, federal, or international law. Notwithstanding the foregoing, this indemnification obligation shall not apply to any Claim for physical loss or damage to the sculpture that is covered by the insurance policy maintained by the City in accordance with the preceding Section or to any Claim caused by the sole negligence or willful misconduct of the City.